Pneumatic connection technologies → Supplementary products

Series QR1-S standard

► Elbow fitting 45° ► external thread ► 10-32 UNF - 1/2 NPTF ► push-in fitting ► Ø1/4 - Ø5/16 ► QR1-S-RAT

Ambient temperature min./max.	+0°C / +60°C
Working pressure min./max.	-0.95 bar / 10 bar
Materials:	
Screw	nickel-plated
Housing	Polybutyleneterephthalate
Seal	Acrylonitrile Butadiene Rubber
Tooth lock washer	Stainless steel
Release ring	Polyoxymethylene
Release ring holder	Die cast zinc; Brass, nickel-plated
Thread	Brass, nickel-plated

Technical Remarks

- The series QR1 (plastic) and QR2 (metal) can not be combined
- Thread seal with captive O-ring
- These pneumatic components with NPTF or inch thread dimensions are only available from our US sales organization
- For further information about assembling and tolerances of adaptable tubing, see the section “Technical information”.

Dimensions in inches

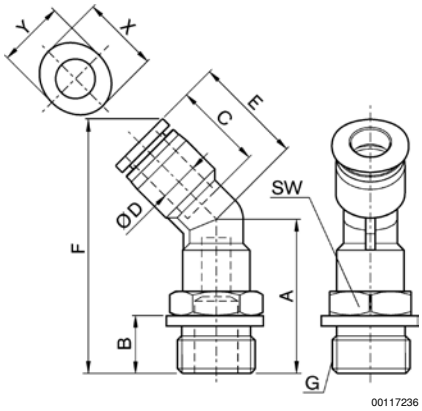

Dimensions in inches

Part No.	Port G	Port D	A	B	C	E	F	SW	X	Y	Delivery quantity [Piece]	Weight [kg]
R432000286	10-32 UNF	Ø1/4	0.91	0.22	0.67	0.81	1.48	1/2	0.55	0.47	10	0.05
R432000298	10-32 UNF	Ø5/32	0.87	0.22	0.63	0.71	1.37	7/16	0.47	0.39	10	0.03
R432000285	3/8 NPTF	Ø1/2	1.5	0.47	0.89	1.15	2.31	7/8	0.91	0.83	10	0.032
R432000289	3/8 NPTF	Ø1/4	1.23	0.47	0.67	0.81	1.8	11/16	0.55	0.47	10	0.032
R432000293	3/8 NPTF	Ø3/8	1.42	0.47	0.83	1.03	2.14	11/16	0.75	0.67	10	0.032
R432000297	3/8 NPTF	Ø5/16	1.26	0.47	0.73	0.89	1.89	11/16	0.63	0.55	10	0.05
R432000284	1/8 NPTF	Ø1/2	1.34	0.32	0.89	1.15	2.16	7/8	0.91	0.83	10	0.018
R432000296	1/8 NPTF	Ø5/16	1.06	0.32	0.73	0.89	1.7	9/16	0.63	0.55	10	0.009
R432000300	1/8 NPTF	Ø5/32	0.91	0.32	0.63	0.71	1.41	7/16	0.47	0.39	10	0.009
R432000288	1/8 NPTF	Ø1/4	0.99	0.32	0.67	0.81	1.56	1/2	0.55	0.47	10	0.009
R432000292	1/8 NPTF	Ø3/8	1.26	0.32	0.83	1.03	1.98	11/16	0.75	0.67	10	0.014

Series QR1-S standard

► Elbow fitting 45° ► external thread ► 10-32 UNF - 1/2 NPTF ► push-in fitting ► Ø1/4 - Ø5/16 ► QR1-S-RAT

Part No.	Port G	Port D	A	B	C	E	F	SW	X	Y	Delivery quantity [Piece]	Weight [kg]
R432000283	1/4 NPTF	Ø1/2	1.46	0.43	0.89	1.15	2.27	7/8	0.91	0.83	10	0.023
R432000291	1/4 NPTF	Ø3/8	1.38	0.43	0.83	1.03	2.1	11/16	0.75	0.67	10	0.023
R432000287	1/4 NPTF	Ø1/4	1.15	0.43	0.67	0.81	1.72	9/16	0.55	0.47	10	0.041
R432000295	1/4 NPTF	Ø5/16	1.22	0.43	0.73	0.89	1.85	9/16	0.63	0.55	10	0.018
R432000299	1/4 NPTF	Ø5/32	1.09	0.43	0.63	0.71	1.47	9/16	0.47	0.39	10	0.032
R432000294	1/2 NPTF	Ø5/16	1.42	0.59	0.73	0.89	2.05	7/8	0.63	0.55	10	0.041
R432000282	1/2 NPTF	Ø1/2	1.62	0.59	0.89	1.15	2.43	7/8	0.91	0.83	10	0.05
R432000290	1/2 NPTF	Ø3/8	1.54	0.59	0.83	1.03	2.26	7/8	0.75	0.67	10	0.05