Pneumatic connection technologies → Supplementary products

Series QR1-S standard

► T-plug connector, reducing ► push-in fitting, 2x ► Ø5/32 - Ø1/4 ► push-in fitting ► Ø1/4 - Ø1/2 ► QR1-S-RTR

00117303

Ambient temperature min./max.	+0°C / +60°C
Working pressure min./max.	-0.95 bar / 10 bar
Materials:	
Screw	nickel-plated
Housing	Polybutyleneterephthalate
Seal	Acrylonitrile Butadiene Rubber
Tooth lock washer	Stainless steel
Release ring	Polyoxymethylene
Release ring holder	Die cast zinc; Brass, nickel-plated

Technical Remarks

- The series QR1 (plastic) and QR2 (metal) can not be combined
- These pneumatic components with NPTF or inch thread dimensions are only available from our US sales organization
- For further information about assembling and tolerances of adaptable tubing, see the section “Technical information”.

Dimensions in inches

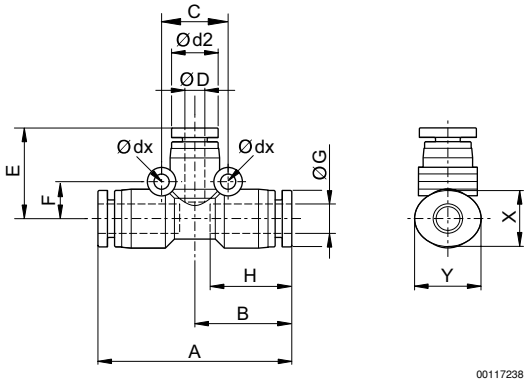

Dimensions in inches

Part No.	Port G	Port D	d2	A	B	H	E	X	Y	Delivery quantity [Piece]	Weight [kg]	
R432003253	Ø5/32	Ø1/4	0.41	1.6	0.8	0.67	0.75	0.47	0.55	10	0.009	
R432003254	Ø5/32	Ø5/16	0.41	1.79	0.89	0.73	0.83	0.55	0.63	10	0.014	
R432003257	Ø5/16	Ø3/8	0.57	2.05	1.03	0.83	0.92	0.67	0.75	10	0.018	
R432003258	Ø5/16	Ø1/2	0.57	2.3	1.15	0.89	1.02	0.83	0.9	10	0.03	
R432003259	Ø3/8	Ø1/2	0.69	2.3	1.15	0.89	1.07	0.83	0.9	10	0.027	
R432003255	Ø1/4	Ø5/16	0.49	1.79	0.89	0.73	0.85	0.552	0.63	10	0.014	
R432003256	Ø1/4	Ø3/8	0.49	2.05	1.03	0.83	1	0.67	0.75	10	0.032	