Sensor technologies → Supplementary products

Sensor, Series ST8

► 8 mm groove ► with cable ► Plug, M8, 3-pin

P322_194_11

Ambient temperature min./max.	-25°C / +75°C
Protection class	IP 65, IP 67
Switching point precision [mm]	±0,1
Vibration resistance	10 - 55 Hz, 1,5 mm
Shock resistance	30 g
Materials:	
Housing	Polyamide
Cable sheath	Polyurethane

	Type of contact	Cable length	DC operating voltage min./max.	Operational voltage AC min./max.	DC switching current, max.	AC switching current, max.	Voltage drop U at Imax	Part No.
		[m]	[V]	[V]	[A]	[A]	[V]	
	Reed	0.3	10 / 30	3 / 30	0.1	0,15	I*Rs	**2750111320**
	electronic PNP	0.3	10 / 30	-	0,15	-	≤ 2,0	**2750111120** **2750123120**
	electronic NPN	0.3	10 / 30	-	0,15	-	≤ 2,0	2750111220

Part No.	Note
2750111320	2); 3)
2750111120	4)
2750123120	1); 4)
2750111220	4)

1) in accordance with EN 50082-2
2) Switching capacity: 3 W / 3 VA
3) Protected against polarity reversal
4) short circuit resistant; Protected against polarity reversal
interfaces: Plug; M8; 3-pin
Material Cable sheath: Polyurethane

Dimensions

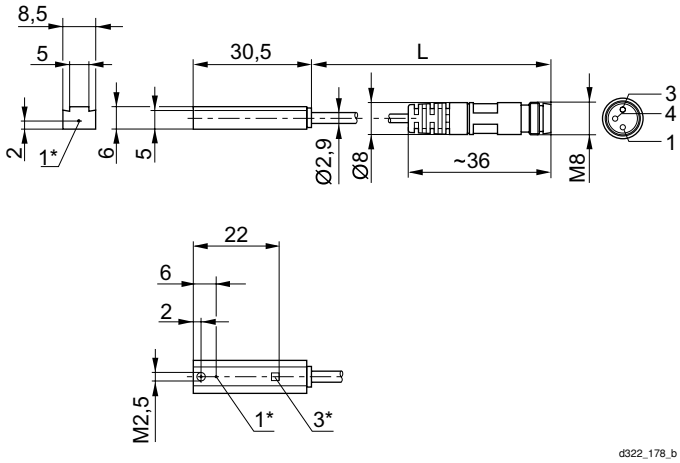

1* = switching point
3* = LED
L = cable length
Pin assignment: 1 = (+), 3 = (-), 4 = (OUT), EN 60947-5-2:1998

Supplementary products
Part numbers marked in bold are available from the central warehouse in Germany, see the shopping basket for more detailed information
Pneumatics catalog, online PDF, as of 2013-02-07, © Bosch Rexroth AG, subject to change