Gripper and vacuum technology → Non-contact transport system

Non-contact transport system, Series NCT-PK

► F = 2.5 - 12 N ► Ø 20 - 60 mm ► for the food and beverage industry

00138097

Version	Bernoulli principle
Working pressure min./max.	1 bar / 7 bar
Ambient temperature min./max.	+5 °C / +60 °C
Medium	Compressed air
Max. particle size	40 µm
Oil content of compressed air	0 mg/m³
Materials:	
Housing	Polyetheretherketone
Stop	Silicone caoutchouc
Nozzle	Stainless steel
Seals	Fluorocaoutchouc
Blanking screw	Polyetheretherketone

Technical Remarks

- The pressure dew point must be at least 15 °C under ambient and medium temperature and may not exceed 3 °C.
- Notice: This product may only be operated with oil-free, dry compressed air.
- Suitable for direct contact with food products (FDA/EC compliant).
- Highly resistant against diverse chemicals used in the food industry.
- Suitable for all conventional CIP (Cleaning-In-Place) and SIP (Sterilization-In-Place) processes.
- Hygienic product design enables quick and easy cleaning.
- Product with laser-etched label.

	Diameter	Holding force at 5 bar	Air consumption at 5 bar	Port	Weight	Part No.
	[mm]	[N]	[l/min]		[kg]	
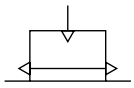	20	2.5	150	M5	0.01	**R412014866**
	30	3	150		0.02	**R412014867**
	40	5.5	150		0.03	**R412014868**
	60	12	220		0.07	**R412014869**

Principle of operation

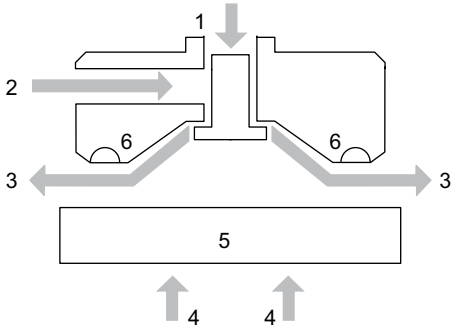

00138451

1) Compressed air connection
2) Alternative compressed air connection
3) Air flow
4) Lifting force
5) Object
6) Stop

Non-contact transport system, Series NCT-PK

► F = 2.5 - 12 N ► Ø 20 - 60 mm ► for the food and beverage industry

Lifting force F and air consumption Q depending on working pressure p, Ø 20

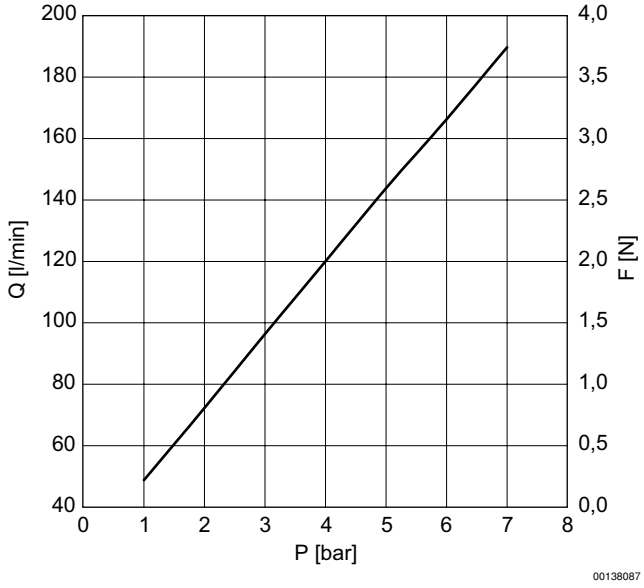

Lifting force F and air consumption Q depending on working pressure p, Ø 30

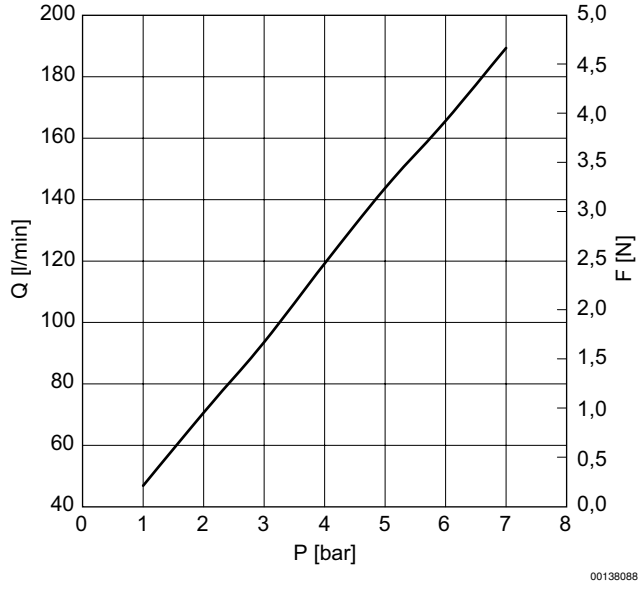

Non-contact transport system, Series NCT-PK

► F = 2.5 - 12 N ► Ø 20 - 60 mm ► for the food and beverage industry

Lifting force F and air consumption Q depending on working pressure p, Ø 40

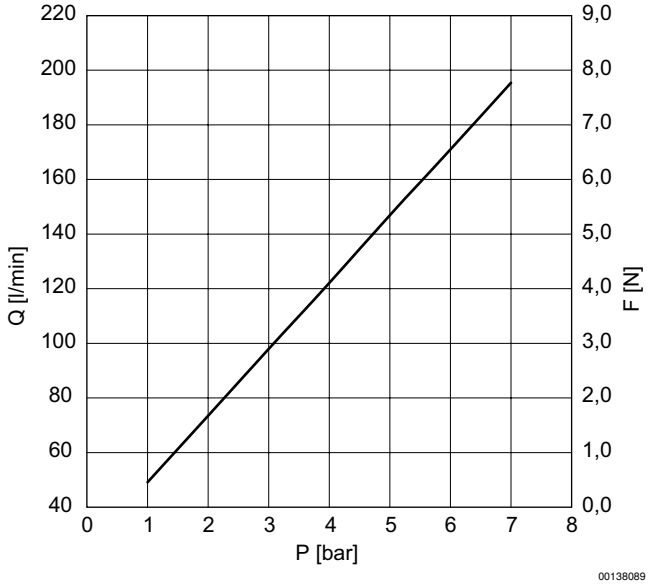

Lifting force F and air consumption Q depending on working pressure p, Ø 60

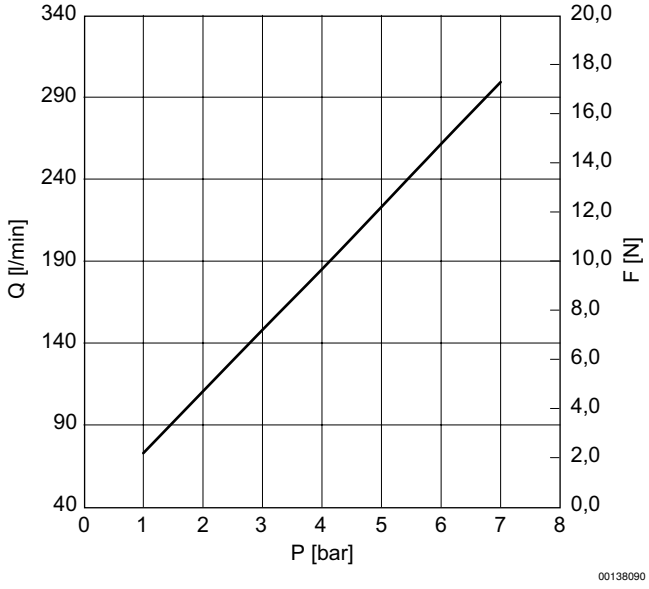

Non-contact transport system, Series NCT-PK

► F = 2.5 - 12 N ► Ø 20 - 60 mm ► for the food and beverage industry

Dimensions, Ø 20

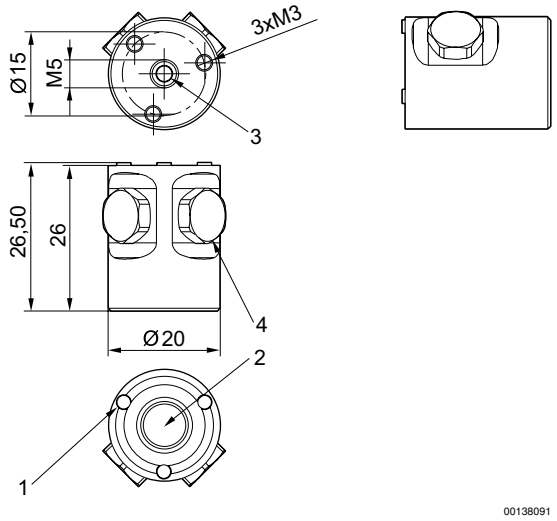

1) Stop
2) Nozzle
3) Compressed air connection
4) Alternative compressed air connection with blanking screw

Dimensions, Ø 30

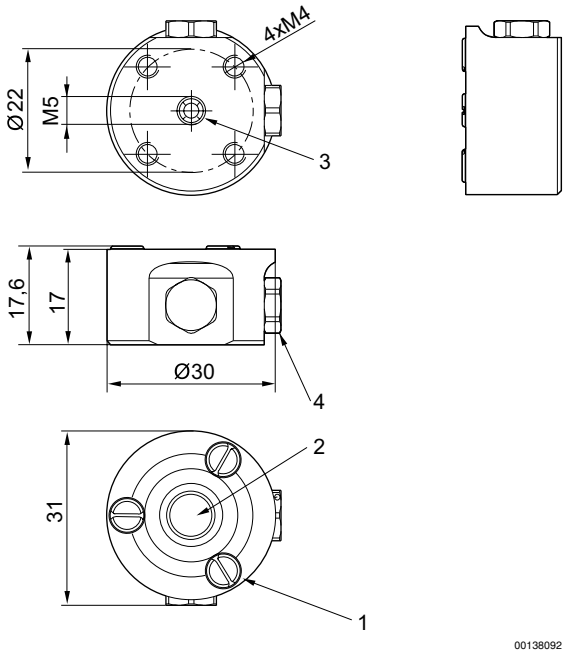

1) Stop
2) Nozzle
3) Compressed air connection
4) Alternative compressed air connection with blanking screw

Non-contact transport system, Series NCT-PK

► F = 2.5 - 12 N ► Ø 20 - 60 mm ► for the food and beverage industry

Dimensions, Ø 40

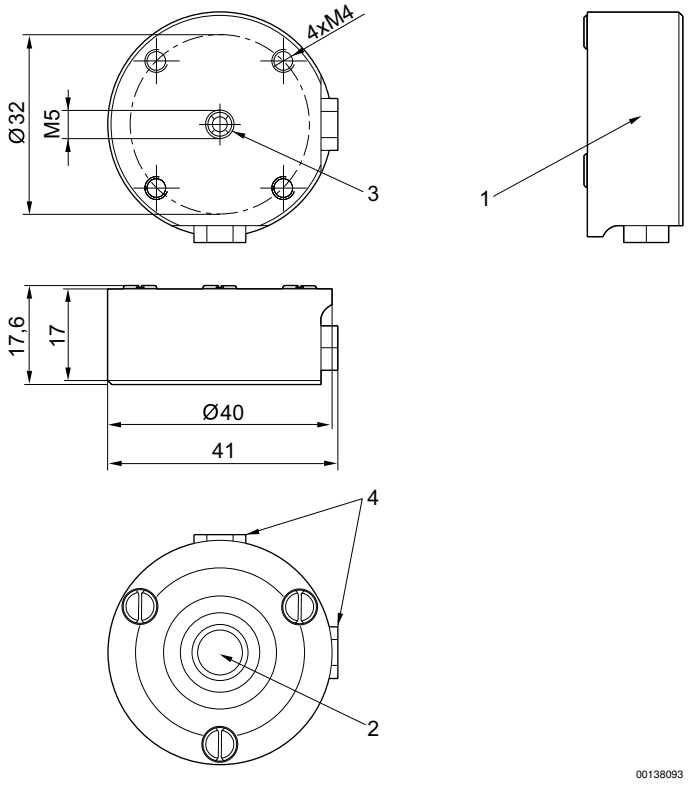

1) Stop
2) Nozzle
3) Compressed air connection
4) Alternative compressed air connection with blanking screw

Non-contact transport system, Series NCT-PK

► F = 2.5 - 12 N ► Ø 20 - 60 mm ► for the food and beverage industry

Dimensions, Ø 60

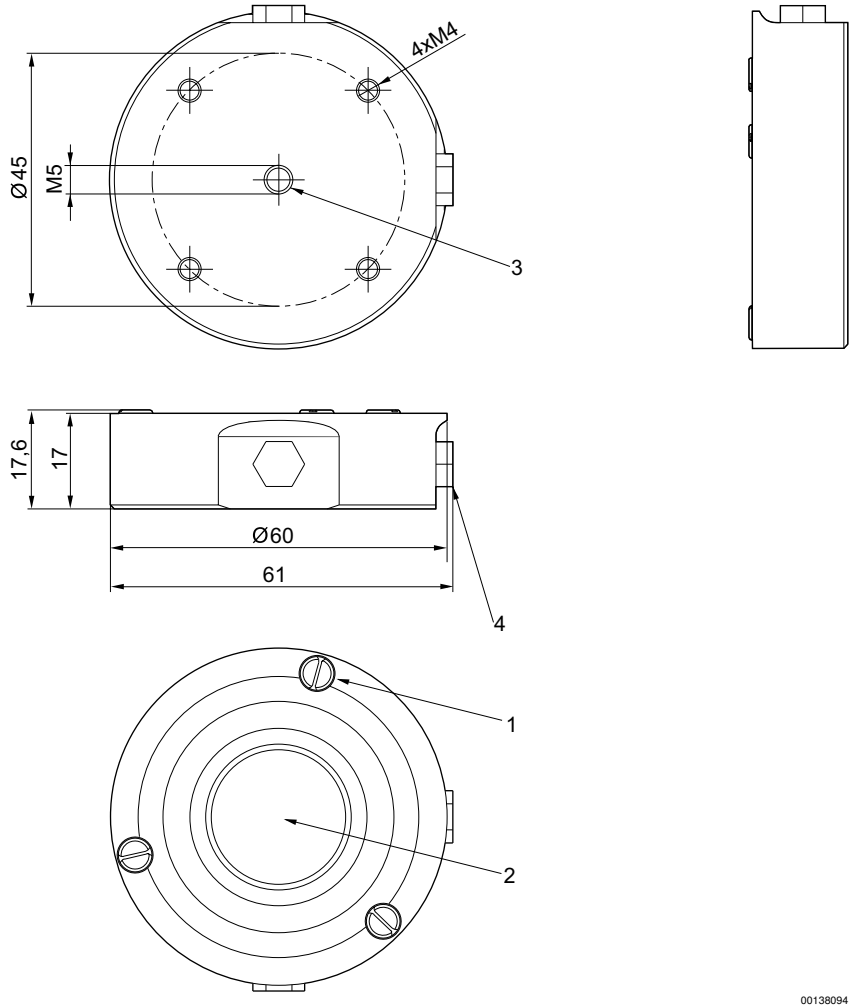

1) Stop
2) Nozzle
3) Compressed air connection
4) Alternative compressed air connection with blanking screw