Preparation of compressed air → Supplementary products

Filter pressure regulator, Series AS2-FRE

► 1/4 NPTF - 3/8 NPTF ► filter porosity: 5 µm ► lockable ► For padlocks ► with pressure gauge ► suitable for ATEX

00119372

ATEX	II 2G2D T4 X
Version	1-in-1, Can be assembled into blocks
Parts	Filter, Pressure controller
Mounting orientation	vertical
Working pressure min./max.	See table below
Medium	Compressed air
Medium temperature min./max.	-10°C / +50°C
Ambient temperature min./max.	-10°C / +50°C
Regulator type	Diaphragm-type pressure regulator
Regulator function	with relieving air exhaust
Adjustment range min./max.	0.5 bar / --
Pressure supply	single
Filter reservoir volume	28 cm³
Filter element	exchangeable
Condensate drain	See table below
Materials:	
Housing	Polyamide
Front plate	Acrylonitrile butadiene styrene
Seals	Acrylonitrile Butadiene Rubber
Threaded bushing	Die cast zinc
Filter insert	Polyethylene

Technical Remarks
■ The pressure dew point must be at least 15 °C under ambient and medium temperature and may not exceed 3 °C.
■ These pneumatic components with NPTF or inch thread dimensions are only available from our US sales organization
■ Max. residual oil content acc. to ISO 8573-4 at the outlet: 10 mg/m³

Preparation of compressed air → Supplementary products

Filter pressure regulator, Series AS2-FRE

► 1/4 NPTF - 3/8 NPTF ► filter porosity: 5 µm ► lockable ► For padlocks ► with pressure gauge ► suitable for ATEX

	Port	Qn	Working pressure min./max.	Condensate drain	Weight	Note	Part No.
		[l/min]	[bar]		[kg]		
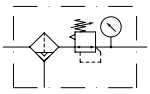	1/4 NPTF	2100	1.5 / 16	semi-automatic, open without pressure	0.394	1); 3)	R432000638
	1/4 NPTF	2100	1.5 / 16	fully automatic, open without pressure	0.437	1); 3)	R432000639
	1/4 NPTF	2100	0 / 16	fully automatic, closed without pressure	0.437	1); 3)	R432000640
	1/4 NPTF	2100	1.5 / 16	semi-automatic, open without pressure	0.609	2)	R432000641
	1/4 NPTF	2100	1.5 / 16	fully automatic, open without pressure	0.661	2)	R432000642
	1/4 NPTF	2100	0 / 16	fully automatic, closed without pressure	0.661	2)	R432000643
	3/8 NPTF	2600	1.5 / 16	semi-automatic, open without pressure	0.437	1); 3)	R432000644
	3/8 NPTF	2600	1.5 / 16	fully automatic, open without pressure	0.437	1); 3)	R432000645
	3/8 NPTF	2600	0 / 16	fully automatic, closed without pressure	0.437	1); 3)	R432000646
	3/8 NPTF	2600	1.5 / 16	semi-automatic, open without pressure	0.596	2)	R432000647
	3/8 NPTF	2600	1.5 / 16	fully automatic, open without pressure	0.648	2)	R432000648
	3/8 NPTF	2600	0 / 16	fully automatic, closed without pressure	0.648	2)	R432000649

1) Reservoir: Polycarbonate
2) Reservoir: Die cast zinc
3) Protective guard: Polyamide
Nominal flow Qn at p1 = 6.3 bar and Δp = 1 bar

Flow rate characteristic

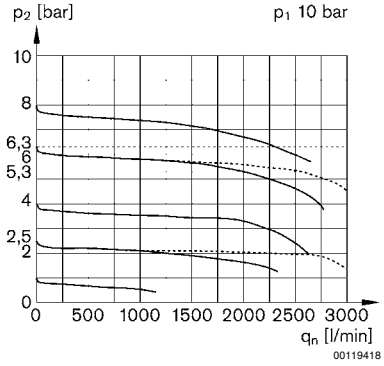

p1 = Working pressure
p2 = Secondary pressure
qn = Nominal flow

Preparation of compressed air → Supplementary products

Filter pressure regulator, Series AS2-FRE

► 1/4 NPTF - 3/8 NPTF ► filter porosity: 5 µm ► lockable ► For padlocks ► with pressure gauge ► suitable for ATEX

Dimensions in inches

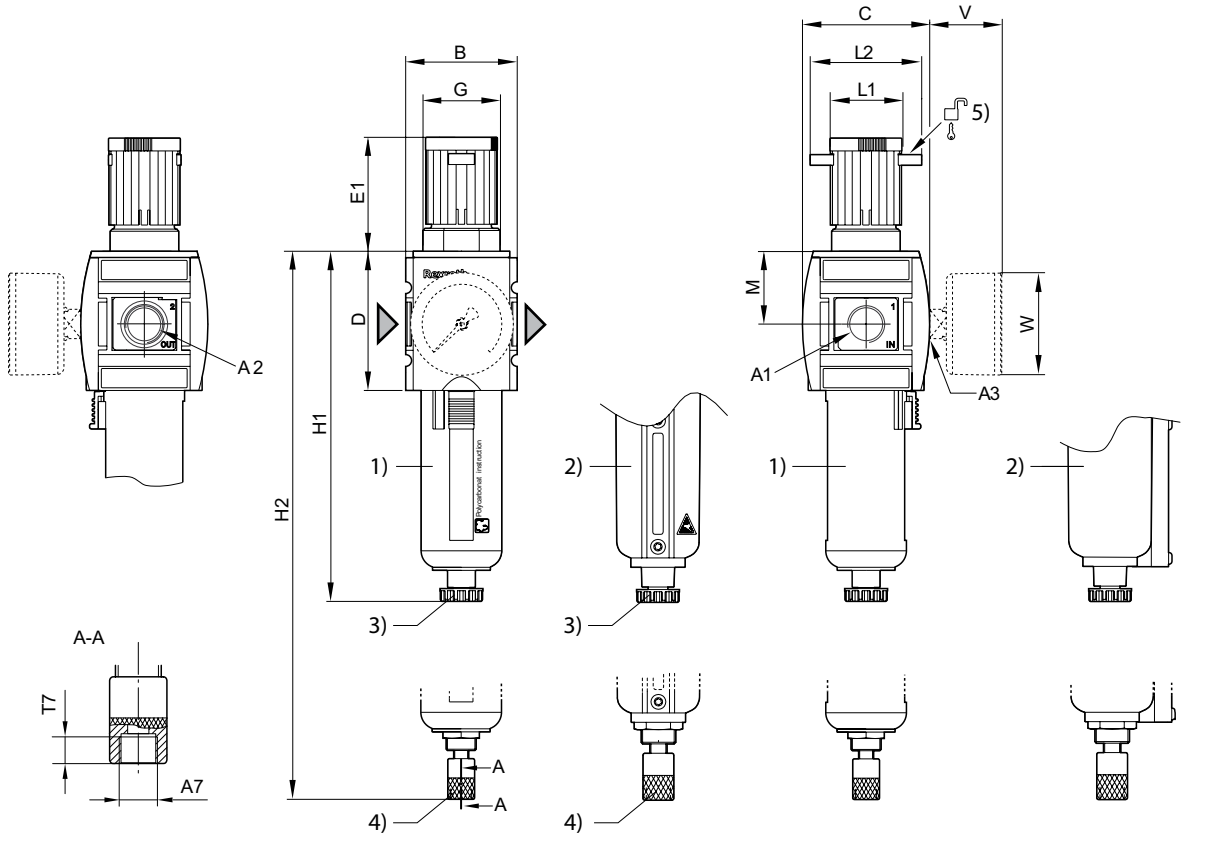

1) Plastic reservoir and protective guard with window
2) Metal reservoir
3) Semi-automatic condensate drain
4) Fully automatic condensate drain
5) Mounting option for padlocks; max. shackle Ø 8

Dimensions in inches

A1	A2	A3	A7	B	C	D	E1	G	H1	H2	L1	L2
1/4 NPTF	1/4 NPT	1/4 NPT	1/8 NPT	2.05	2.32	2.56	2.28	M36x1,5	6.44	--	1.34	2.13
1/4 NPTF	1/4 NPT	1/4 NPT	1/8 NPT	2.05	2.32	2.56	2.28	M36x1,5	--	7.11	1.34	2.13
3/8 NPTF	3/8 NPT	1/4 NPT	1/8 NPT	2.05	2.32	2.56	2.28	M36x1,5	6.44	--	1.34	2.13
3/8 NPTF	3/8 NPT	1/4 NPT	1/8 NPT	2.05	2.32	2.56	2.28	M36x1,5	--	7.11	1.34	2.13

A1	M	T7	V	W									
1/4 NPTF	1.34	0.34	1.46	1.97									
1/4 NPTF	1.34	0.34	1.46	1.97									
3/8 NPTF	1.34	0.34	1.46	1.97									
3/8 NPTF	1.34	0.34	1.46	1.97									