Preparation of compressed air → Maintenance units and components

Pressure regulator, Series AS1-RGS-...-DS

► G 1/4 ► Air supply: right ► Qn=1000 l/min ► Activation: manual ► with continuous pressure supply ► with pressure gauge in hand wheel

00137238

Mounting orientation	Any
Working pressure min./max.	See table below
Medium	Compressed air
Medium temperature min./max.	-10°C / +50°C
Ambient temperature min./max.	-10°C / +50°C
Regulator type	Diaphragm-type pressure regulator, Can be assembled into blocks
Regulator function	with relieving air exhaust
Adjustment range min./max.	See table below
Materials:	
Housing	Polyamide
Front plate	Acrylonitrile butadiene styrene
Seals	Acrylonitrile Butadiene Rubber

Technical Remarks
■ The pressure dew point must be at least 15 °C under ambient and medium temperature and may not exceed 3 °C.

		Port	Qn	Working pressure min./max.	Adjustment range min. - max..	Weight	Part No.
			[l/min]	[bar]	[bar]	[kg]	
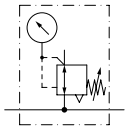		G 1/4	1000	0.2 / 12	0.2 - 4	0.239	R412014720
				0.5 / 12	0.5 - 8		R412014721
				0.5 / 12	0.5 - 10		R412014722
Nominal flow Qn at p1 = 6.3 bar and Δp = 1 bar Panel nut included in scope of delivery							

Application example

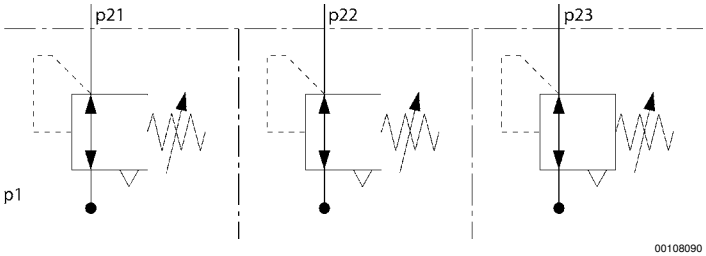

00108090

p1 = working pressure
p21; p22; p23 = secondary pressure

Preparation of compressed air → Maintenance units and components

Pressure regulator, Series AS1-RGS-...-DS

► G 1/4 ► Air supply: right ► Qn=1000 l/min ► Activation: manual ► with continuous pressure supply ► with pressure gauge in hand wheel

Pressure characteristics curve

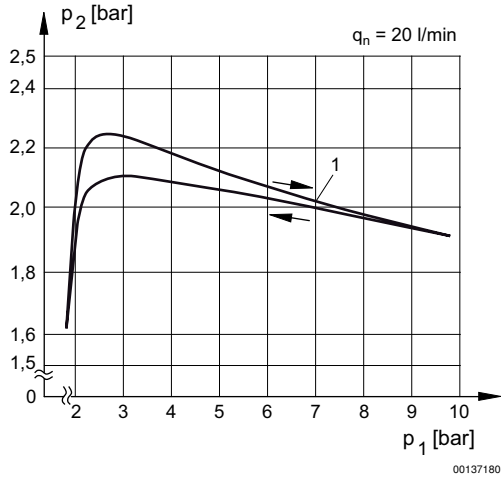

p1 = Working pressure
p2 = Secondary pressure
qn = Nominal flow
1 = Starting point

Flow rate characteristic

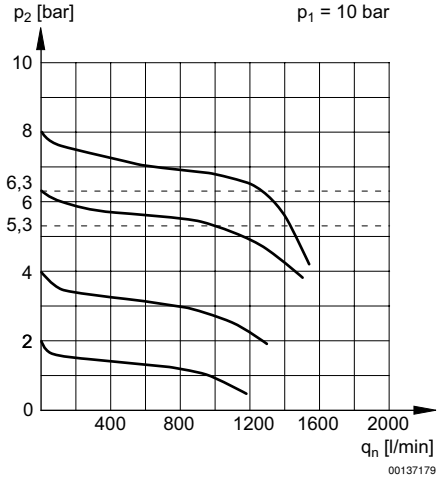

p1 = Working pressure
p2 = Secondary pressure
qn = Nominal flow

Preparation of compressed air → Maintenance units and components

Pressure regulator, Series AS1-RGS-...-DS

► G 1/4 ► Air supply: right ► Qn=1000 l/min ► Activation: manual ► with continuous pressure supply ► with pressure gauge in hand wheel

Dimensions

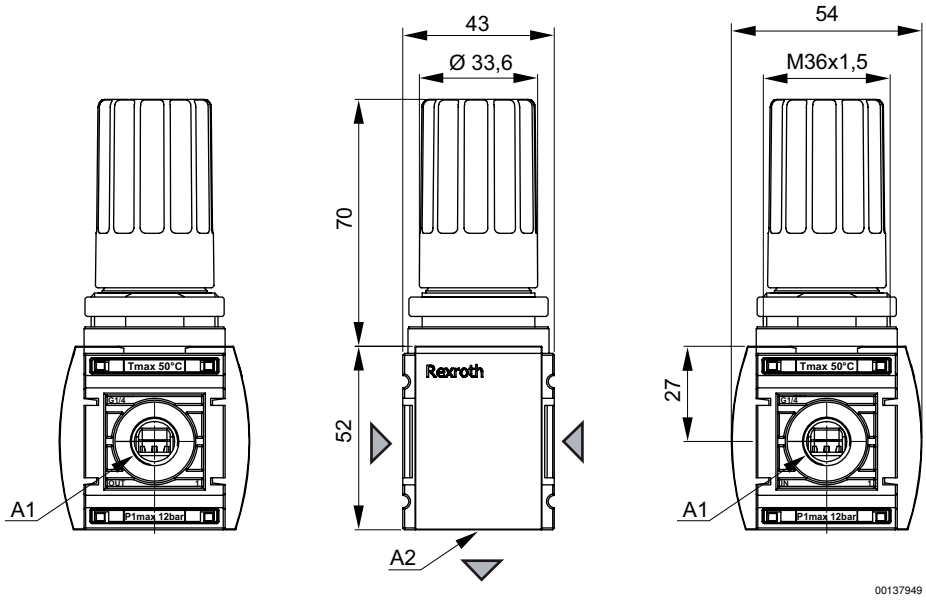

A1 = input
A2 = output