Rotary actuators → Rotary wing drives

Series RAN, with Front mounting and sensor holder

► angle of rotation: 0 - 275 ° ► with magnetic piston ► Rotary wing drive, double-acting ► axis geometry: single ► cushioning: elastic

PRAN_012

Working pressure min./max.	See table below
Ambient temperature min./max.	+5°C / +60°C
Medium temperature min./max.	+5°C / +60°C
Medium	Compressed air
Max. particle size	5 µm
Oil content of compressed air	0 mg/m³ - 1 mg/m³
Theoretical torque at	6,3 bar
Materials:	
Housing	Aluminum, anodized; Plastic
Seals	Acrylonitrile Butadiene Rubber
Axis	Steel
Mounting flange	Aluminum, anodized

Technical Remarks

- The pressure dew point must be at least 15 °C under ambient and medium temperature and may not exceed 3 °C.
- The oil content of air pressure must remain constant during the life cycle.
- Use only the approved oils from Bosch Rexroth, see chapter „Technical information“.
- Notice: This product may only be operated with oil-free, dry compressed air.

Frame size		RAN1	RAN3	RAN8	RAN20	RAN50
Axis diameter	**[mm]**	**4**	**5**	**6**	**8**	**12**
Max. permissible axial bearing load	[N]	2	3.9	5.9	29.4	98.1
Max. permissible radial bearing load	[N]	19.6	39.6	58.8	294.2	588.4
Repetitive precision	[°]	3	3	3	3	3
Theoretical torque	[Nm]	0.149	0.37	0.989	2.471	6.548
Permissible kinetic energy	[J]	0.0004	0.002	0.005	0.015	0.06

	Frame size	Compressed air connection	angle of rotation	Swivel time min./max.	Working pressure min./max.	Weight	Part No.
			[°]	[s]	[bar]	[kg]	
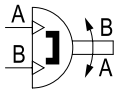	RAN1	M5	0 - 90	0.03 / 0.3	2.5 / 7	0.065	2650117270
	RAN1	M5	0 - 180	0.06 / 0.6	2.5 / 7	0.065	**2650117280**
	RAN1	M5	0 - 270	0.08 / 0.8	2.5 / 7	0.065	2650117290
	RAN3	M5	0 - 90	0.04 / 0.4	2 / 7	0.095	2650117300
	RAN3	M5	0 - 180	0.08 / 0.8	2 / 7	0.095	2650117310
	RAN3	M5	0 - 270	0.1 / 1	2 / 7	0.095	2650117320
	RAN8	M5	0 - 90	0.05 / 0.5	2 / 7	0.15	**2650117330**
	RAN8	M5	0 - 180	0.1 / 1	2 / 7	0.15	**2650117340**
	RAN8	M5	0 - 270	0.15 / 1.5	2 / 7	0.15	2650117350
	RAN20	M5	0 - 90	0.06 / 0.6	2 / 7	0.29	**2650117360**
	RAN20	M5	0 - 180	0.12 / 1.2	2 / 7	0.29	**2650117370**
	RAN20	M5	0 - 270	0.2 / 2	2 / 7	0.285	2650117380
	RAN50	G 1/8	0 - 90	0.08 / 1	2 / 7	1.01	**2650117390**
	RAN50	G 1/8	0 - 180	0.16 / 1.8	2 / 7	1.01	**2650117400**
	RAN50	G 1/8	0 - 275	0.2 / 3	2 / 7	0.97	**2650117410**

min. swivel times at 5 bar and without load

Rotary actuators → Rotary wing drives

Series RAN, with Front mounting and sensor holder

► angle of rotation: 0 - 275 ° ► with magnetic piston ► Rotary wing drive, double-acting ► axis geometry: single ► cushioning: elastic

Dimensions, RAN1

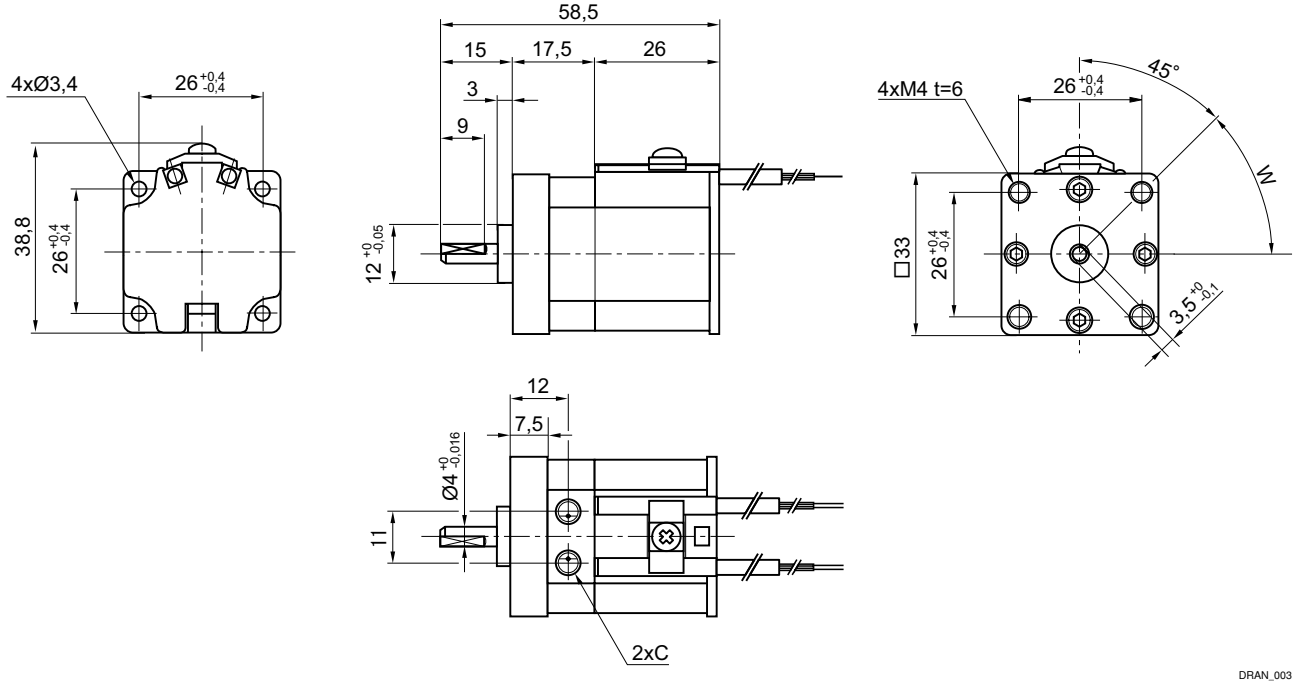

C = compressed air connection
t = depth

Dimensions, RAN3

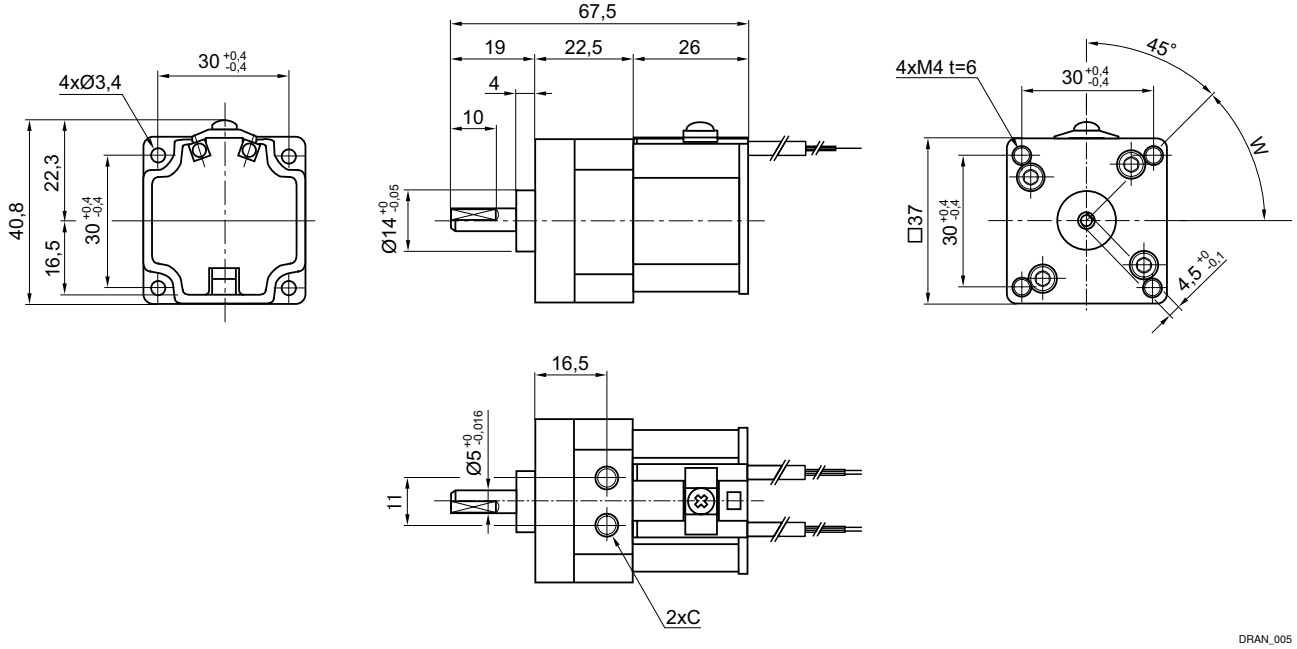

C = compressed air connection
t = depth

Rotary actuators → Rotary wing drives

Series RAN, with Front mounting and sensor holder

► angle of rotation: 0 - 275 ° ► with magnetic piston ► Rotary wing drive, double-acting ► axis geometry: single ► cushioning: elastic

Dimensions, RAN8

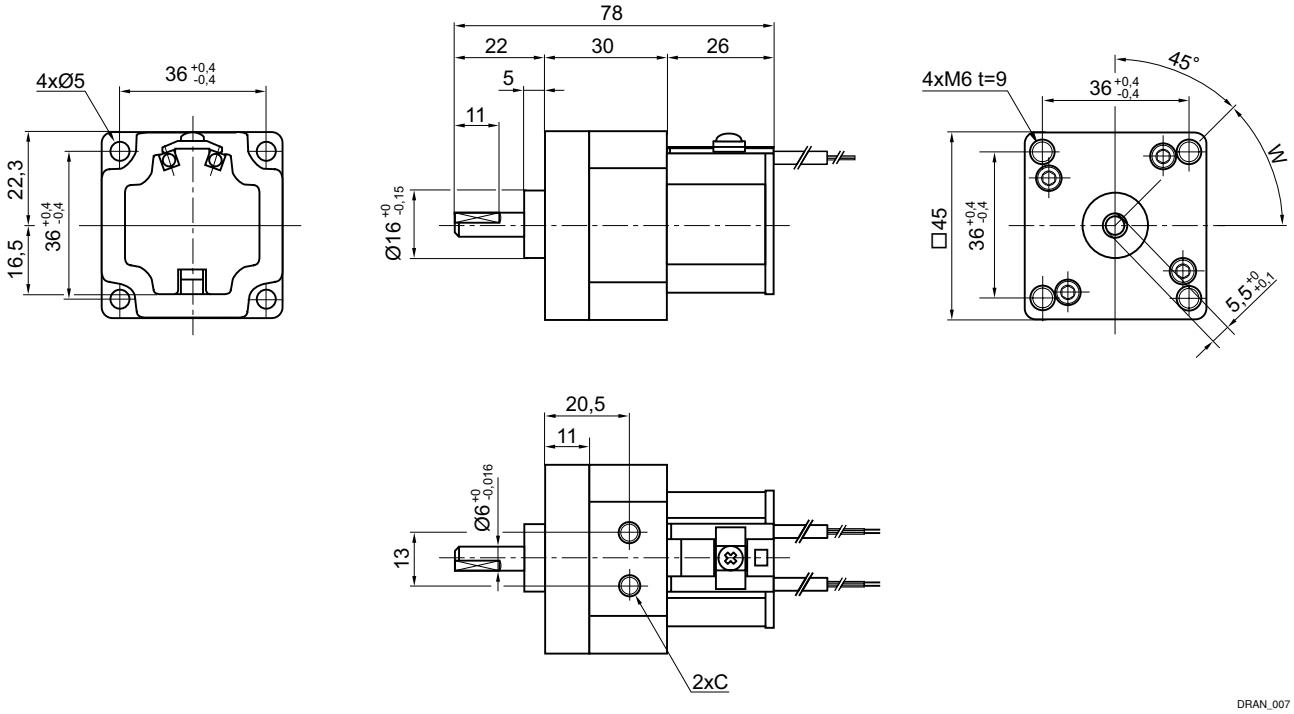

C = compressed air connection
t = depth

Dimensions, RAN20

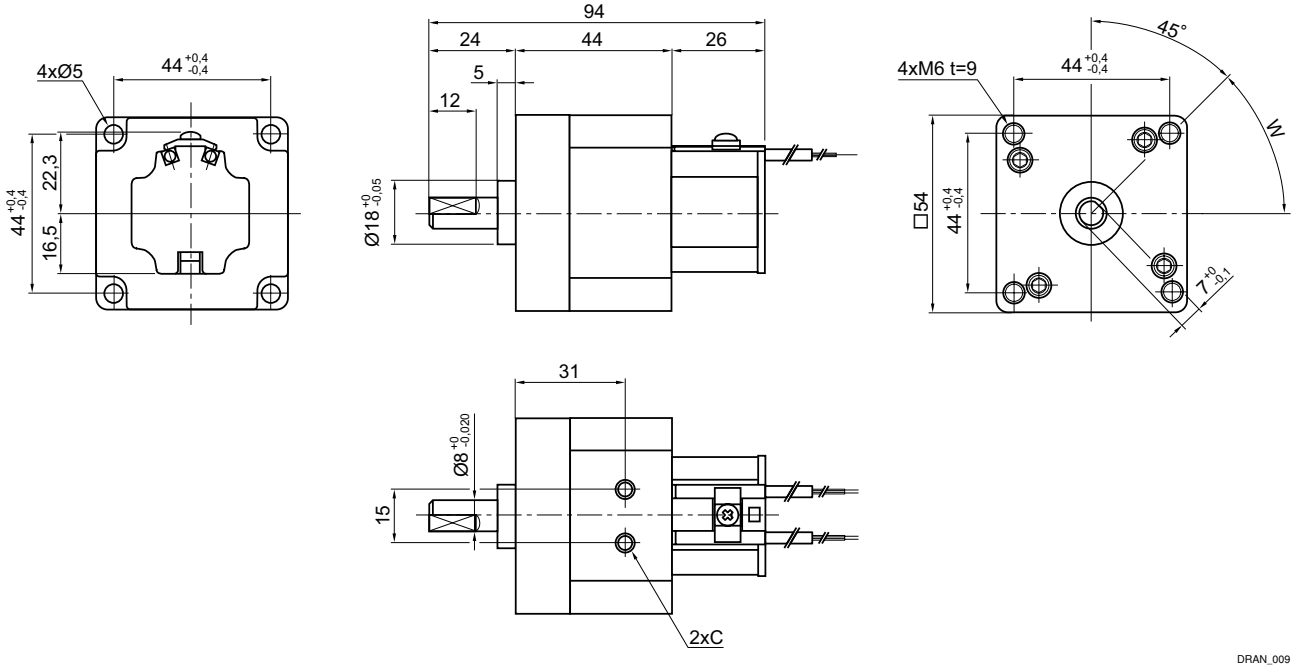

C = compressed air connection
t = depth

Rotary actuators → Rotary wing drives

Series RAN, with Front mounting and sensor holder

► angle of rotation: 0 - 275 ° ► with magnetic piston ► Rotary wing drive, double-acting ► axis geometry: single ► cushioning: elastic

Dimensions, RAN50

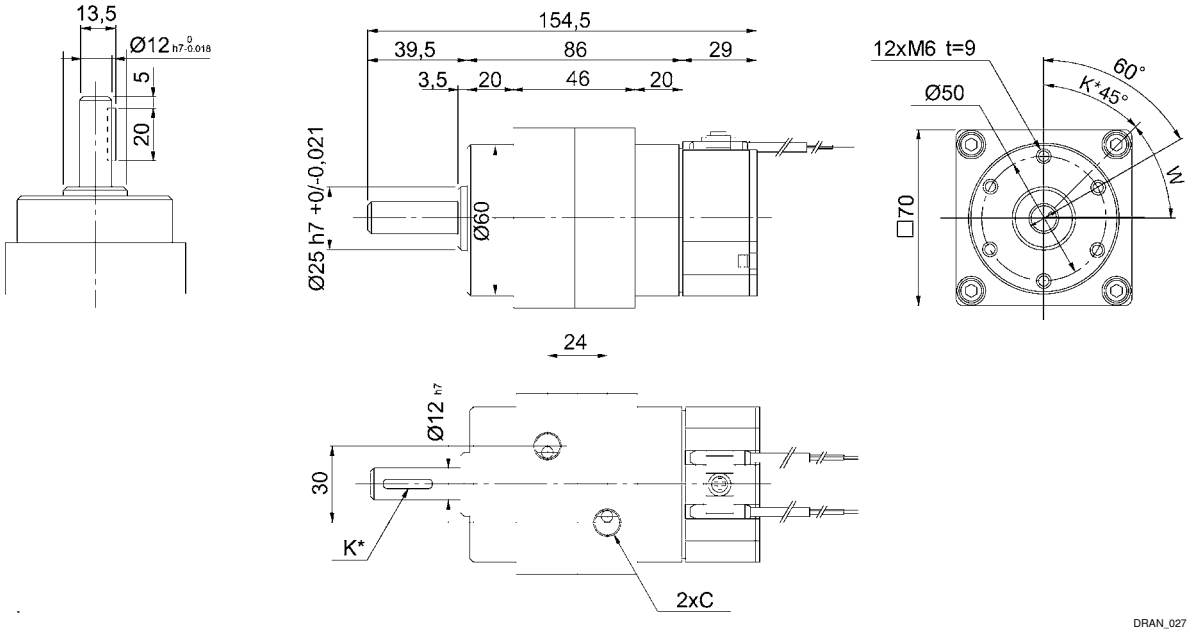

K* = key groove. Width 4 x depth 2.5 x length 20, position 45°
C = compressed air connection
t = depth

Position of end stops

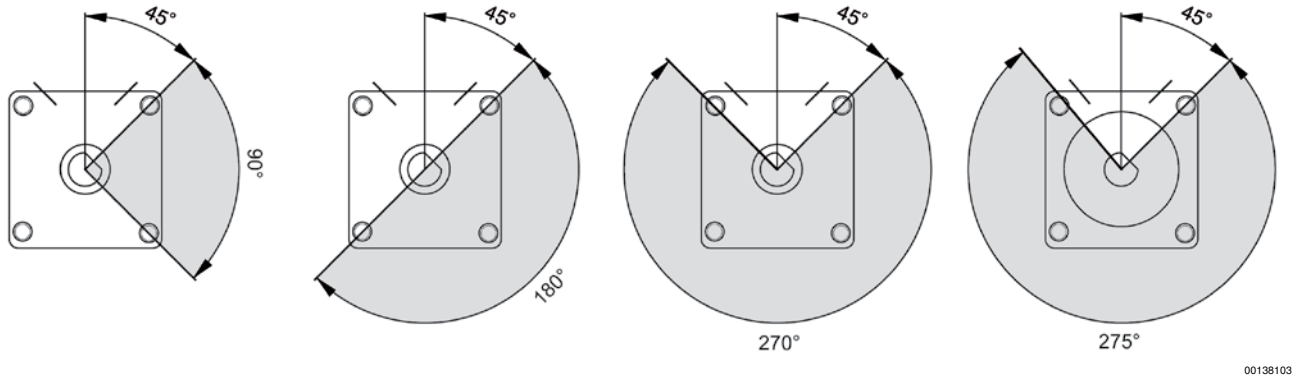

Start of rotary movement at 45°.