Preparation of compressed air → Supplementary products

Filling unit, pneumatically operated, Series AS2-SSU

► 1/4 NPTF - 3/8 NPTF ► pipe connection ► suitable for ATEX

00119379

ATEX	II 2G2D T4 X
Parts	3/2-way valve, pneumatically operated, Filling valve
Version	Poppet valve, Can be assembled into blocks
Working pressure min./max.	2.5 bar / 10 bar
Medium	Compressed air
Medium temperature min./max.	-10°C / +50°C
Ambient temperature min./max.	-10°C / +50°C
Pilot	internal
Sealing principle	soft sealing
Control pressure min./max.	2.5 bar / 16 bar
Max. particle size	5 µm
Materials:	
Housing	Polyamide
Front plate	Acrylonitrile butadiene styrene
Seals	Acrylonitrile Butadiene Rubber
Threaded bushing	Die cast zinc

Technical Remarks

- The pressure dew point must be at least 15 °C under ambient and medium temperature and may not exceed 3 °C.
- Builds up pressure slowly in the pneumatic systems, i.e. prevents a sudden pressure build-up during a restart after a mains pressure failure or avoids emergency OFF switching. This also avoids dangerous, jerky cylinder movements.
- These pneumatic components with NPTF or inch thread dimensions are only available from our US sales organization

	Port	Exhaust	Qn			Weight	Part No.
				1►2	2►3		
				[l/min]		[kg]	
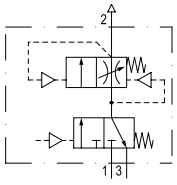	1/4 NPTF	1/4 NPTF	1300	1300	380	0.424	R432000850
	3/8 NPTF						R432000856

Nominal flow Qn at p1 = 6.3 bar and Δp = 1 bar

Preparation of compressed air → Supplementary products

Filling unit, pneumatically operated, Series AS2-SSU

► 1/4 NPTF - 3/8 NPTF ► pipe connection ► suitable for ATEX

Secondary pressure while filling

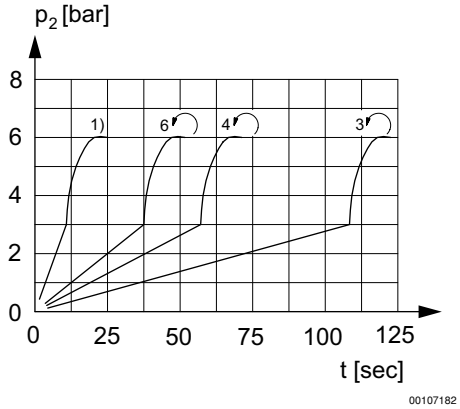

adjustable filling
1) Fully opened
p2 = secondary pressure
t = fill time

Flow rate characteristic

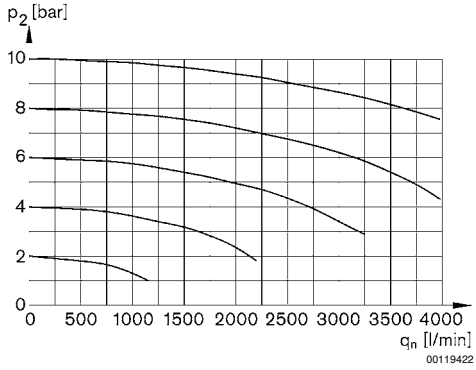

p2 = secondary pressure
qn = nominal flow

Preparation of compressed air → Supplementary products

Filling unit, pneumatically operated, Series AS2-SSU

► 1/4 NPTF - 3/8 NPTF ► pipe connection ► suitable for ATEX

Dimensions in inches

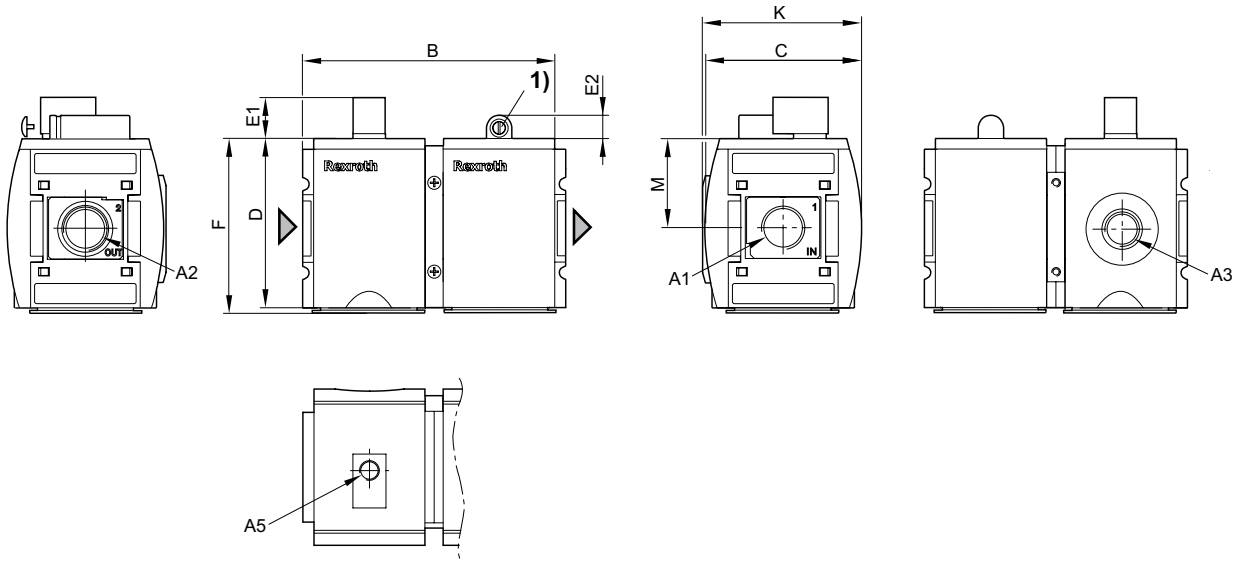

A1 = input
A2 = output
A3 = ventilation port
A5 = pilot connection
1) Adjustment screw for filling time

Dimensions in inches

Part No.	A1	A2	A3	A5	B	C	D	E1	E2	F	K	M
R432000850	1/4 NPTF	1/4 NPT	1/4 NPT	G 1/8	4.09	2.32	2.56	0.67	0.43	2.64	2.4	1.34
R432000856	3/8 NPTF	3/8 NPT	1/4 NPT	G 1/8	4.09	2.32	2.56	0.67	0.43	2.64	2.4	1.34

Start function

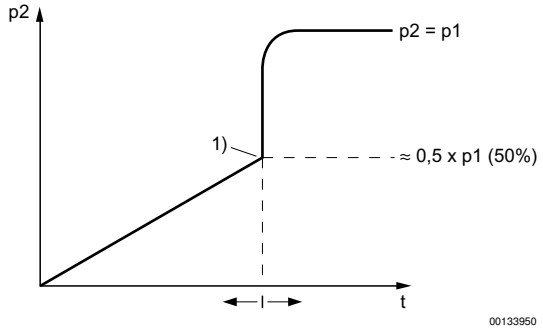

p2 = output pressure
t = adjustable filling time
1) Switching point