Preparation of compressed air → Supplementary products

Pressure regulator, Series AS5-RGS

► 3/4 NPTF - 1 NPTF ► Qn=14500 l/min ► Activation: mechanical ► lockable ► For padlocks

00119787

Mounting orientation	Any
Working pressure min./max.	See table below
Medium	Compressed air
Medium temperature min./max.	-10°C / +50°C
Ambient temperature min./max.	-10°C / +50°C
Regulator type	Diaphragm-type pressure regulator, Can be assembled into blocks
Regulator function	with relieving air exhaust
Adjustment range min./max.	See table below
Pressure supply	single
Max. Internal air consumption	1.5 l/min
Materials:	
Housing	Polyamide
Front plate	Acrylonitrile butadiene styrene
Seals	Acrylonitrile Butadiene Rubber

Technical Remarks
■ The pressure dew point must be at least 15 °C under ambient and medium temperature and may not exceed 3 °C.
■ These pneumatic components with NPTF or inch thread dimensions are only available from our US sales organization

		Port	Qn	Working pressure min./max.	Adjustment range min. - max..	Weight	Part No.
			[l/min]	[bar]	[bar]	[kg]	
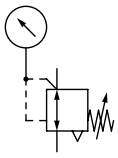		3/4 NPTF	14500	0.1 / 16	0.1 - 1	0.997	R432002861
		3/4 NPTF		0.1 / 16	0.1 - 2		R432002862
		3/4 NPTF		0.2 / 16	0.2 - 4		R432002863
		3/4 NPTF		0.5 / 16	0.5 - 8		R432002864
		3/4 NPTF		0.5 / 16	0.5 - 10		R432002865
		3/4 NPTF		0.5 / 16	0.5 - 16		R432002866
		1 NPTF		0.1 / 16	0.1 - 1		R432002879
		1 NPTF		0.1 / 16	0.1 - 2		R432002880
		1 NPTF		0.2 / 16	0.2 - 4		R432002881
		1 NPTF		0.5 / 16	0.5 - 8		R432002882
		1 NPTF		0.5 / 16	0.5 - 10		R432002883
		1 NPTF		0.5 / 16	0.5 - 16		R432002884
	-	3/4 NPTF	14500	0.1 / 16	0.1 - 1	0.905	R432002849
		3/4 NPTF		0.1 / 16	0.1 - 2		R432002851
		3/4 NPTF		0.2 / 16	0.2 - 4		R432002853
		3/4 NPTF		0.5 / 16	0.5 - 8		R432002855
		3/4 NPTF		0.5 / 16	0.5 - 10		R432002857
		3/4 NPTF		0.5 / 16	0.5 - 16		R432002859
		1 NPTF		0.1 / 16	0.1 - 1		R432002867
		1 NPTF		0.1 / 16	0.1 - 2		R432002869
		1 NPTF		0.2 / 16	0.2 - 4		R432002871
		1 NPTF		0.5 / 16	0.5 - 8		R432002873
		1 NPTF		0.5 / 16	0.5 - 10		R432002875
		1 NPTF		0.5 / 16	0.5 - 16		R432002877

Nominal flow Qn at p1 = 6.3 bar and Δp = 1 bar

Supplementary products
Part numbers marked in bold are available from the central warehouse in Germany, see the shopping basket for more detailed information
Pneumatics catalog, online PDF, as of 2013-03-19, © Bosch Rexroth AG, subject to change

Preparation of compressed air → Supplementary products

Pressure regulator, Series AS5-RGS

► 3/4 NPTF - 1 NPTF ► Qn=14500 l/min ► Activation: mechanical ► lockable ► For padlocks

Pressure characteristics curve

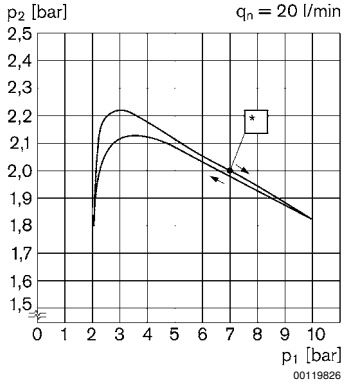

p1 = working pressure
p2 = secondary pressure
qn = nominal flow
* starting point

Flow rate characteristic (setting range p2: 0.5 - 8 bar)

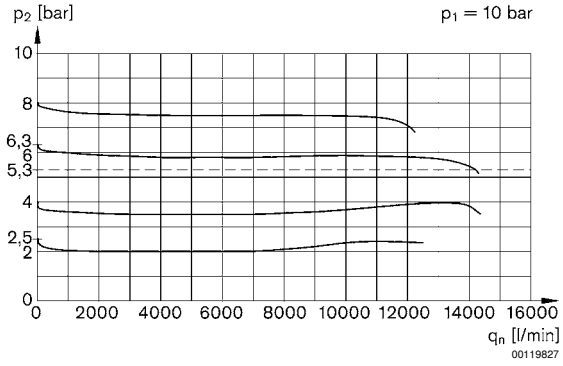

p1 = working pressure
p2 = secondary pressure
qn = nominal flow

Preparation of compressed air → Supplementary products

Pressure regulator, Series AS5-RGS

► 3/4 NPTF - 1 NPTF ► Qn=14500 l/min ► Activation: mechanical ► lockable ► For padlocks

Dimensions in inches

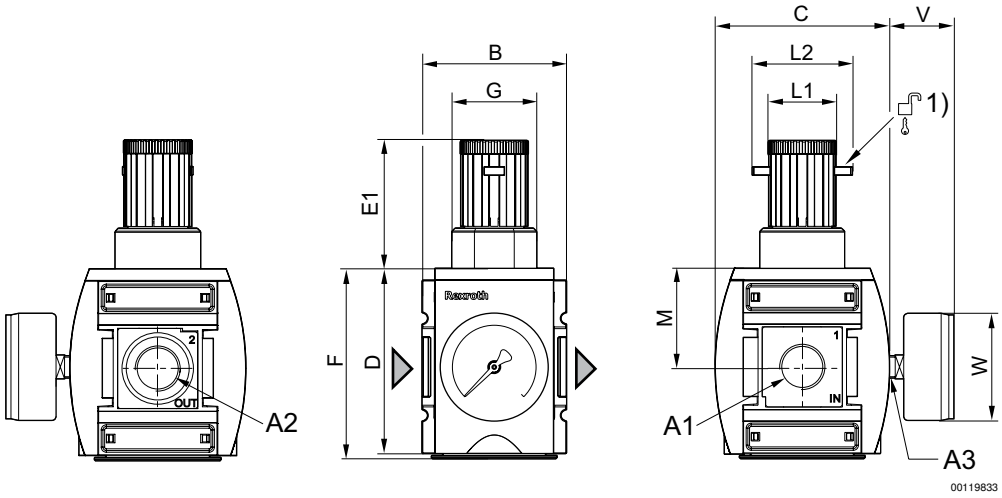

1) Mounting option for padlocks; max. shackle Ø 8

Dimensions in inches

A1	A2	A3	B	C	D	E1	F	G	L1	L2	M	V
3/4 NPTF	3/4 NPT	1/4 NPT	3.35	4.06	4.29	2.95	4.41	M50x1,5	1.61	2.36	2.28	1.5
1 NPTF	1 NPT	1/4 NPT	3.35	4.06	4.29	2.95	4.41	M50x1,5	1.61	2.36	2.28	1.5

A1	W												
3/4 NPTF	2.48												
1 NPTF	2.48												