Preparation of compressed air → Supplementary products

Filter, Series AS5-FLS

► 3/4 NPTF - 1 NPTF ► filter porosity: 5 µm

00119796

Version	Standard filter, Can be assembled into blocks
Mounting orientation	vertical
Working pressure min./max.	See table below
Medium	Compressed air
Medium temperature min./max.	-10°C / +50°C
Ambient temperature min./max.	-10°C / +50°C
Filter reservoir volume	87 cm³
Filter element	exchangeable
filter porosity	5 µm
Condensate drain	See table below
Materials:	
Housing	Polyamide
Front plate	Acrylonitrile butadiene styrene
Seals	Acrylonitrile Butadiene Rubber
Threaded bushing	Die cast zinc

Technical Remarks
■ The pressure dew point must be at least 15 °C under ambient and medium temperature and may not exceed 3 °C.
■ These pneumatic components with NPTF or inch thread dimensions are only available from our US sales organization

	Port	Qn	Working pressure min./max.	Condensate drain	Reservoir	Protective guard	Weight	Part No.
		[l/min]					[kg]	
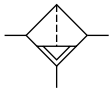	3/4 NPTF	7800	1.5 / 16	semi-automatic, open without pressure	Polycarbonate	Polyamide	0.718	R432002755
	3/4 NPTF		1.5 / 16	fully automatic, open without pressure			0.769	R432002753
	3/4 NPTF		0 / 16	fully automatic, closed without pressure			0.769	R432002751
	1 NPTF		1.5 / 16	semi-automatic, open without pressure			0.718	R432002765
	1 NPTF		1.5 / 16	fully automatic, open without pressure			0.769	R432002763
	1 NPTF		0 / 16	fully automatic, closed without pressure			0.769	R432002761
Nominal flow Qn at p1 = 6.3 bar and Δp = 1 bar								

Preparation of compressed air → Supplementary products

Filter, Series AS5-FLS

► 3/4 NPTF - 1 NPTF ► filter porosity: 5 µm

Flow rate characteristic

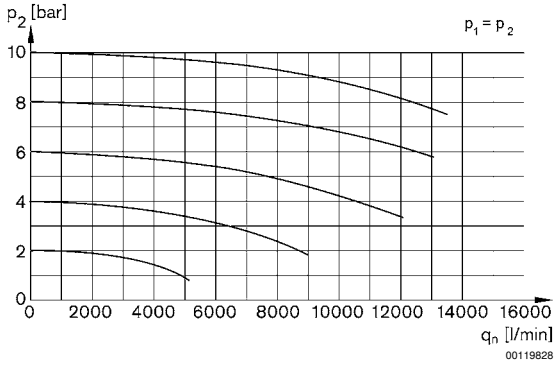

p2 = secondary pressure
qn = nominal flow

Dimensions in inches

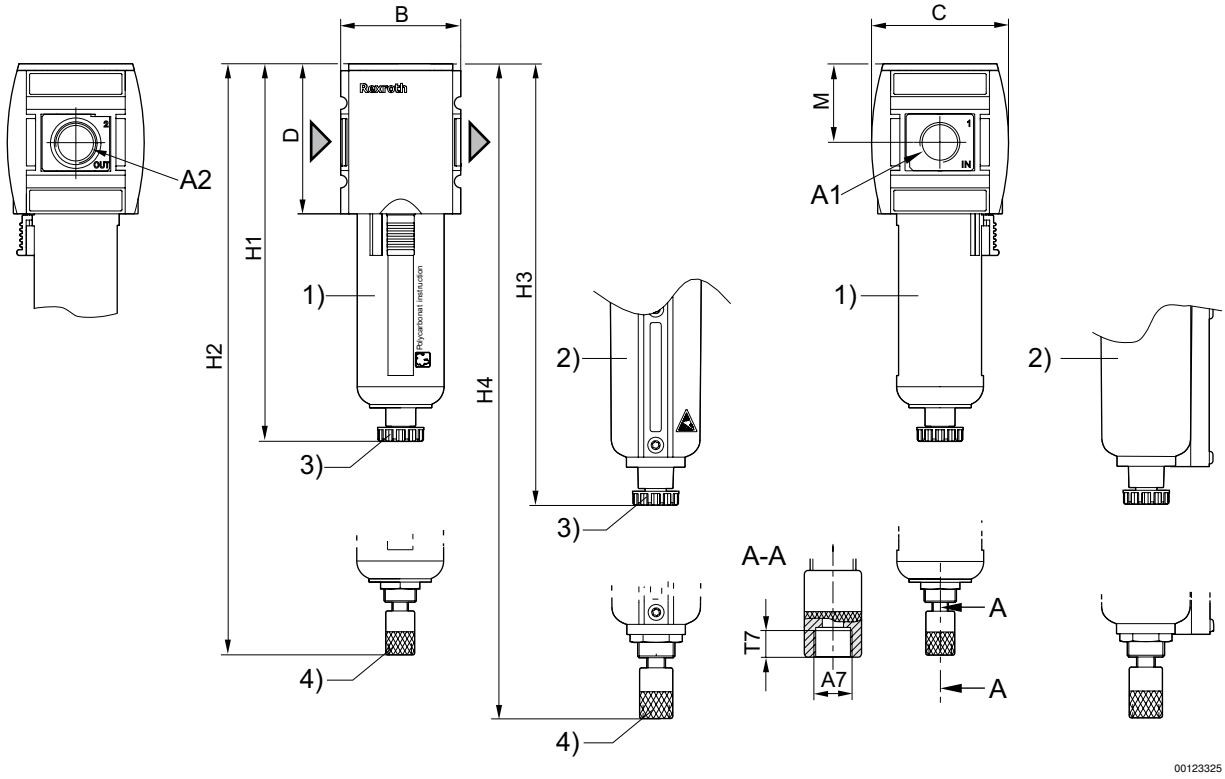

1) Plastic reservoir and protective guard with window
2) Metal reservoir with inspection glass
3) Semi-automatic condensate drain
4) Fully automatic condensate drain

Dimensions in inches

Part No.	A1	A2	A7	B	C	D	H1	H2	H3	H4	M	
R432002755	3/4 NPTF	3/4 NPT	G 1/8	3.35	4.06	4.29	9.84	10.47	10	10.65	2.28	

Filter, Series AS5-FLS

► 3/4 NPTF - 1 NPTF ► filter porosity: 5 µm

Part No.	A1	A2	A7	B	C	D	H1	H2	H3	H4	M	
R432002753	3/4 NPTF	3/4 NPT	G 1/8	3.35	4.06	4.29	9.84	10.47	10	10.65	2.28	
R432002751	3/4 NPTF	3/4 NPT	G 1/8	3.35	4.06	4.29	9.84	10.47	10	10.65	2.28	
R432002765	1 NPTF	1 NPT	G 1/8	3.35	4.06	4.29	9.84	10.47	10	10.65	2.28	
R432002763	1 NPTF	1 NPT	G 1/8	3.35	4.06	4.29	9.84	10.47	10	10.65	2.28	
R432002761	1 NPTF	1 NPT	G 1/8	3.35	4.06	4.29	9.84	10.47	10	10.65	2.28	