Preparation of compressed air → Supplementary products

Pre-filter, Series AS5-FLP

► 3/4 NPTF - 1 NPTF ► filter porosity: 0.3 µm ► contamination display: integrated

00119623

Version	Pre-filter, Can be assembled into blocks
Mounting orientation	vertical
Working pressure min./max.	See table below
Medium	Compressed air
Medium temperature min./max.	-10°C / +50°C
Ambient temperature min./max.	-10°C / +50°C
Filter reservoir volume	87 cm³
Filter element	exchangeable
filter porosity	0.3 µm
Condensate drain	See table below
Materials:	
Housing	Polyamide
Front plate	Acrylonitrile butadiene styrene
Seals	Acrylonitrile Butadiene Rubber
Threaded bushing	Die cast zinc
Reservoir	Polycarbonate
Protective guard	Polyamide

Technical Remarks
■ The pressure dew point must be at least 15 °C under ambient and medium temperature and may not exceed 3 °C.
■ These pneumatic components with NPTF or inch thread dimensions are only available from our US sales organization
■ Recommended pre-filtering: 5 µm
■ max. residual oil content at the outlet: 1 mg/m³
■ Max. residual oil content acc. to ISO 8573-4 at the outlet: 100000 1/m³
■ solid impurities in the compressed air at the outlet as per ISO 8573-1: class 2

	Port	Qn	Working pressure min./ max.	Condensate drain	Reservoir	Weight	Part No.
		[l/min]				[kg]	
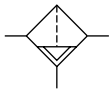	3/4 NPTF	2200	1.5 / 16	semi-automatic, open without pressure	Polycarbonate	0.361	R432002912
	3/4 NPTF		1.5 / 16	fully automatic, open without pressure		0.41	R432002746
	3/4 NPTF		0 / 16	fully automatic, closed without pressure		0.41	R432002744
	1 NPTF		1.5 / 16	semi-automatic, open without pressure		0.361	R432002914
	1 NPTF		1.5 / 16	fully automatic, open without pressure		0.41	R432002750
	1 NPTF		0 / 16	fully automatic, closed without pressure		0.762	R432002748
Nominal flow Qn at 6.3 bar and Δp = 0.1 bar							

Preparation of compressed air → Supplementary products

Pre-filter, Series AS5-FLP

► 3/4 NPTF - 1 NPTF ► filter porosity: 0.3 µm ► contamination display: integrated

Flow rate characteristic

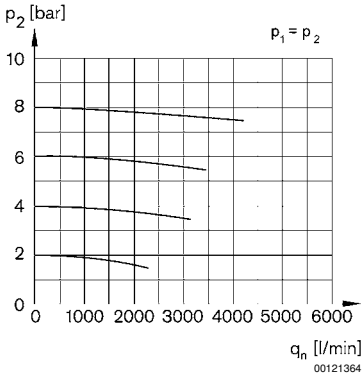

p2 = secondary pressure
qn = nominal flow

Dimensions in inches

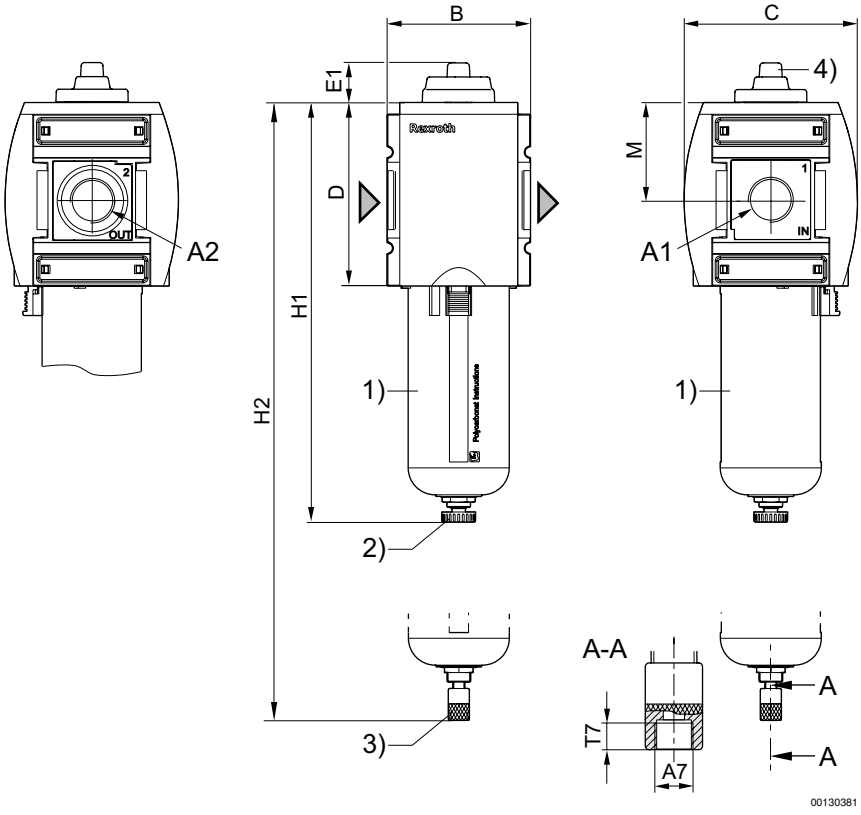

1) Plastic reservoir and protective guard with window
2) Semi-automatic condensate drain
3) Fully automatic condensate drain
4) contamination display

Pre-filter, Series AS5-FLP

► 3/4 NPTF - 1 NPTF ► filter porosity: 0.3 µm ► contamination display: integrated

Dimensions in inches

Part No.	A1	A2	A7	B	C	D	E1	H1	H2	M	T7	
R432002912	3/4 NPTF	3/4 NPT	1/8 NPT	3.35	4.06	4.29	0.93	9.84	10.47	2.28	0.34	
R432002746	3/4 NPTF	3/4 NPT	1/8 NPT	3.35	4.06	4.29	0.93	9.84	10.47	2.28	0.34	
R432002744	3/4 NPTF	3/4 NPT	1/8 NPT	3.35	4.06	4.29	0.93	9.84	10.47	2.28	0.34	
R432002914	1 NPTF	1 NPT	1/8 NPT	3.35	4.06	4.29	0.93	9.84	10.47	2.28	0.34	
R432002750	1 NPTF	1 NPT	1/8 NPT	3.35	4.06	4.29	0.93	9.84	10.47	2.28	0.34	
R432002748	1 NPTF	1 NPT	1/8 NPT	3.35	4.06	4.29	0.93	9.84	10.47	2.28	0.34	