Valve systems → Valve systems

Standard compact injector, Series ECV

► For HF03 valve system

00115581

Ambient temperature min./max.	+0°C / +50°C
Medium temperature min./max.	+0°C / +50°C
Working pressure min./max.	3 bar / 6 bar
Medium	Compressed air
Max. particle size	5 µm
Oil content of compressed air	0 mg/m³ - 1 mg/m³
Nozzle Ø	1.5 mm
Max. vacuum level at p.opt	76 %
Max. suction capacity	63 l/min
Air consumption at p.opt.	116 l/min
Materials:	
Housing	Polyamide, fiber-glass reinforced
Seal	Acrylonitrile Butadiene Rubber
Nozzle	Brass
Silencers	Polyethylene

Technical Remarks

- Note: All data refers to an ambient pressure of 1013 mbar and an ambient temperature of 20°C.
- The pressure dew point must be at least 15 °C under ambient and medium temperature and may not exceed 3 °C.
- The oil content of compressed air must remain constant during the life cycle.

	Type	Compressed air connection	Vacuum connection	Port exhaust	Sound pressure level intake effect	Sound pressure level intake effect		Note	Part No.
					[dBA]	[dBA]	[kg]		
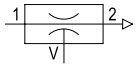	ECV-PC-15-NN	Ø 8	Ø 8	Ø 8	-	-	0.11	2)	0821305160
		Ø 8	Ø 8	-	67	73		1)	0821305161
		G 1/8	G 1/8	G 1/8	-	-		2)	0821305164
		G 1/8	G 1/8	-	67	73		1)	**0821305165**

1) with silencer
2) With ventilation port

Vacuum p2 depending on working pressure p1

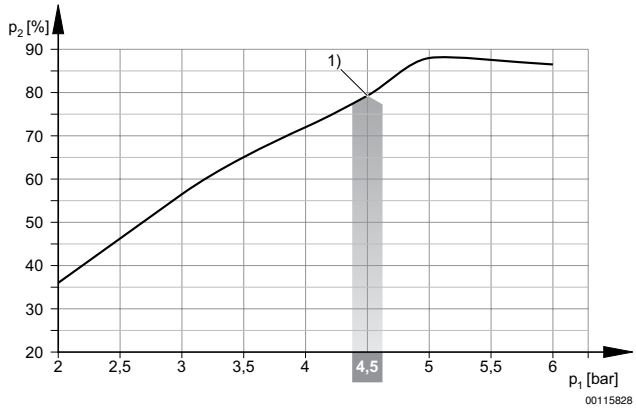

1) optimum working pressure

Supplementary products
Part numbers marked in bold are available from the central warehouse in Germany, see the shopping basket for more detailed information

Valve systems → Valve systems

Standard compact injector, Series ECV

► For HF03 valve system

Suction capacity qs depending on working pressure p1

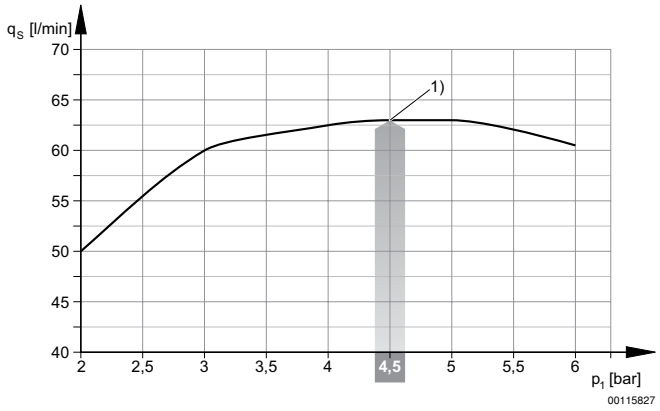

1) optimum working pressure

Evacuation time tE depending on vacuum p2 for 1 l volume (with optimal operating pressure p1opt)

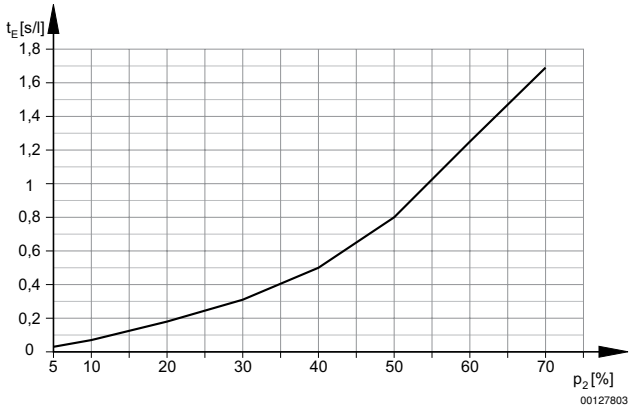

Air consumption qv depending on working pressure p1

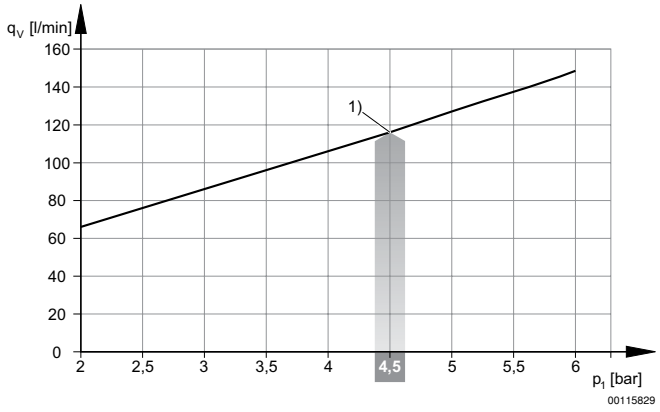

1) optimum working pressure

Valve systems → Valve systems

Standard compact injector, Series ECV

► For HF03 valve system

ECV-PC-15-A, With ventilation port

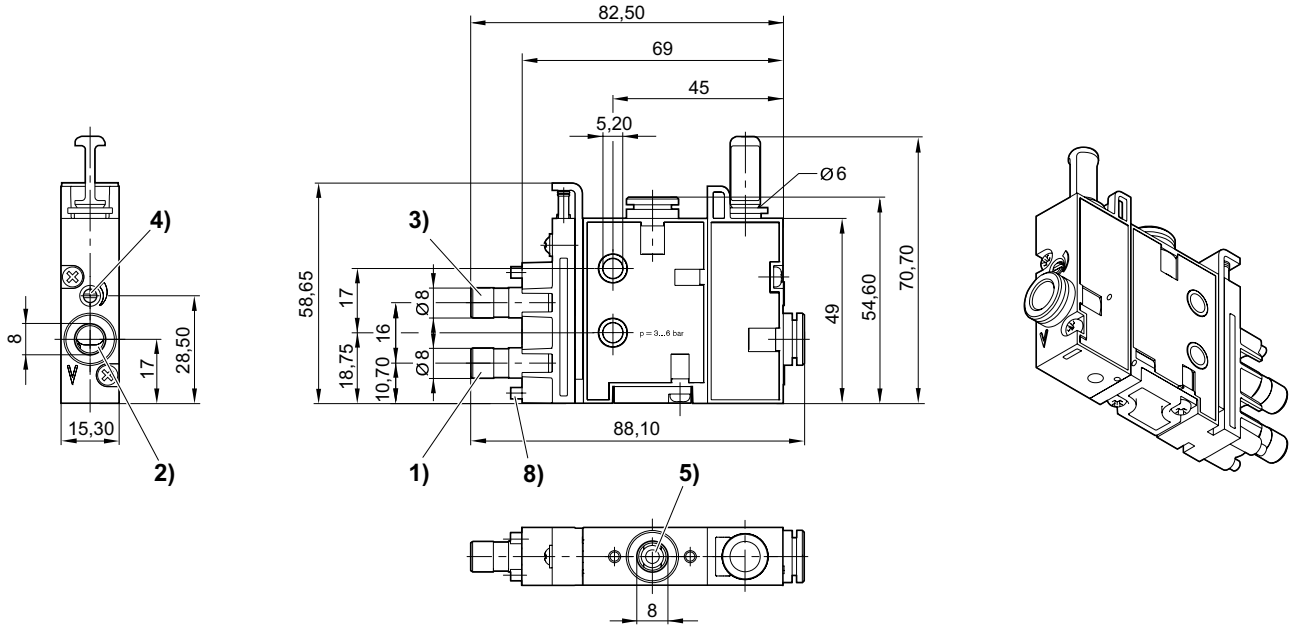

1) air connection (suction)
2) vacuum connection
3) release pulse connection
4) throttle for release pulse
5) ventilation port
8) Spacer

ECV-HF03-...with NO activation

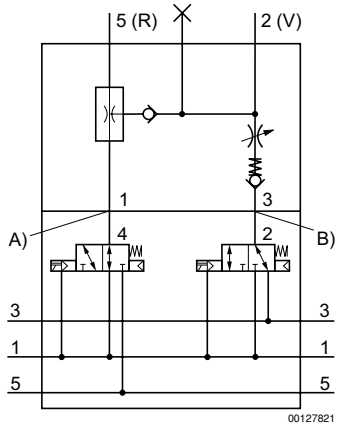

ECV-HF03-...with NC activation

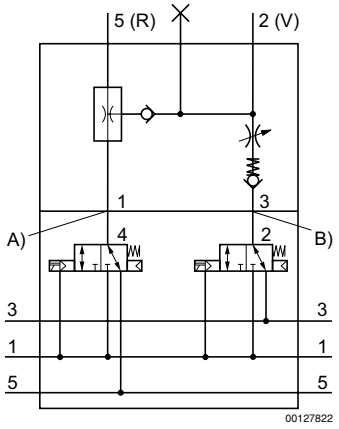

A) Air connection suction
B) release pulse air connection

Valve systems → Valve systems

Standard compact injector, Series ECV

► For HF03 valve system

ECV-PC-15-A, with silencer

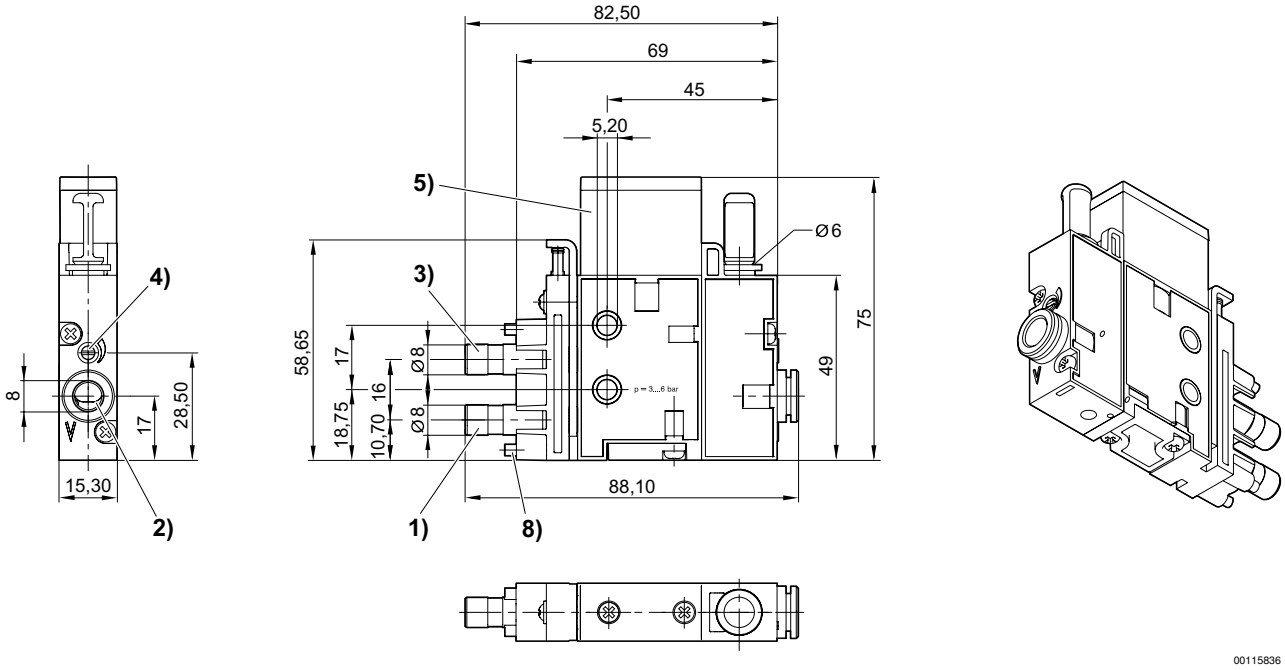

1) air connection (suction)
2) vacuum connection
3) release pulse connection
4) throttle for release pulse
5) silencer
8) Spacer

ECV-HF03-...with NO activation

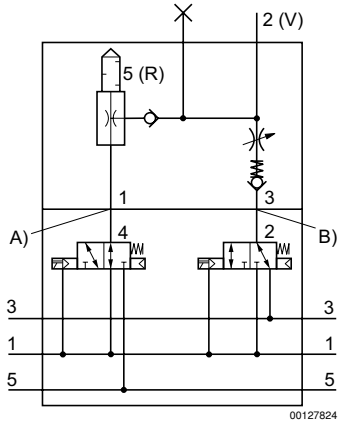

ECV-HF03-...with NC activation

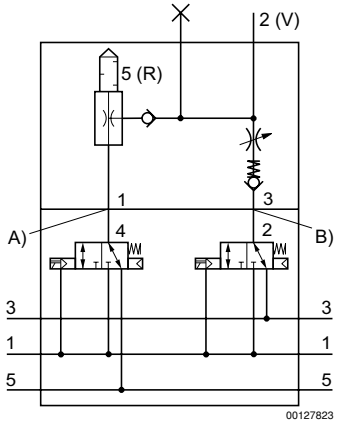

A) Air connection suction
B) release pulse air connection

Valve systems → Valve systems

Standard compact injector, Series ECV

► For HF03 valve system

ECV-PC-15-A, With ventilation port

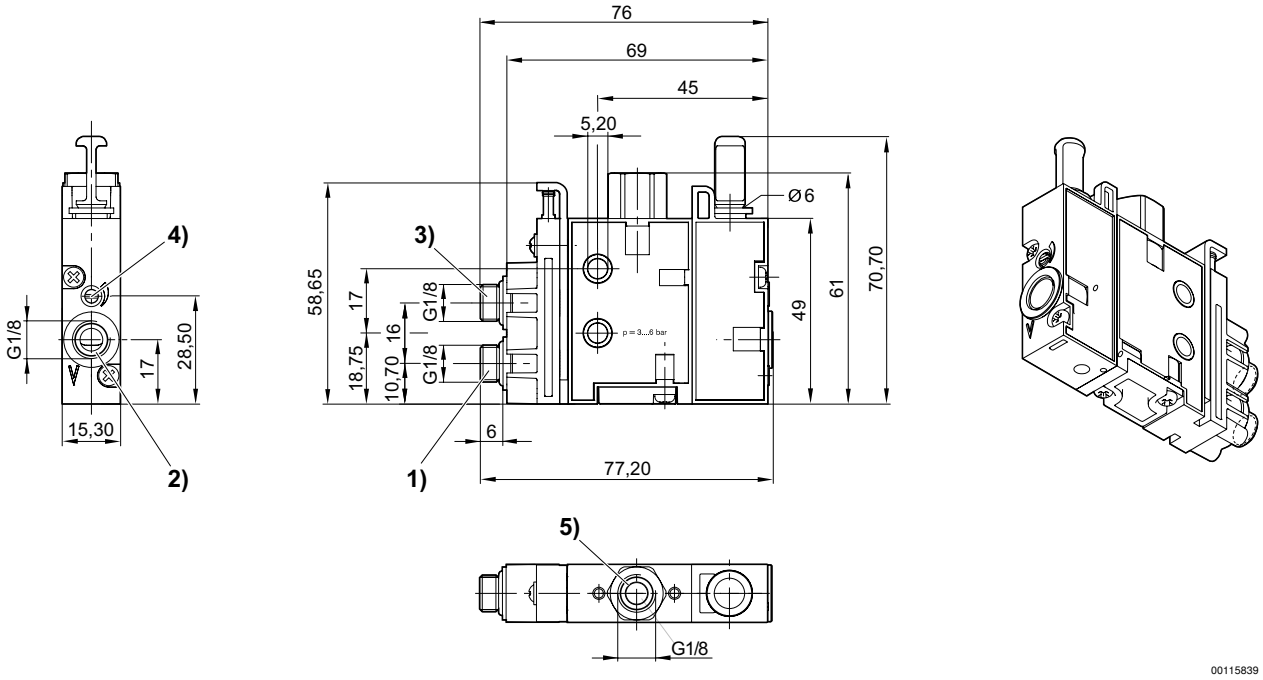

1) air connection (suction)
2) vacuum connection
3) release pulse connection
4) throttle for release pulse
5) ventilation port

ECV-HF03-...with NO activation

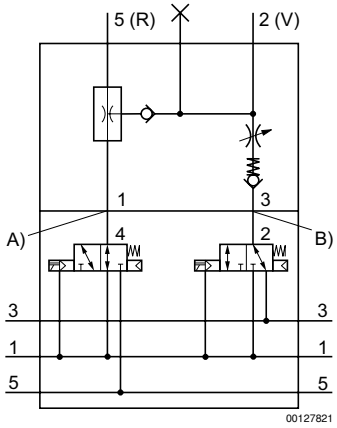

ECV-HF03-...with NC activation

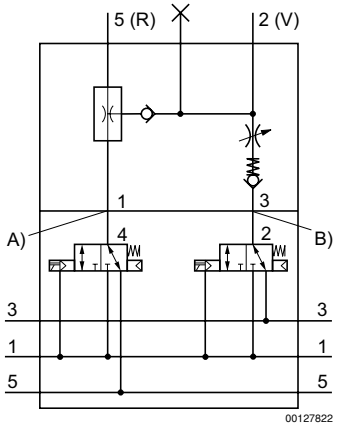

A) Air connection suction
B) release pulse air connection

Valve systems → Valve systems

Standard compact injector, Series ECV

► For HF03 valve system

ECV-PC-15-A, with silencer

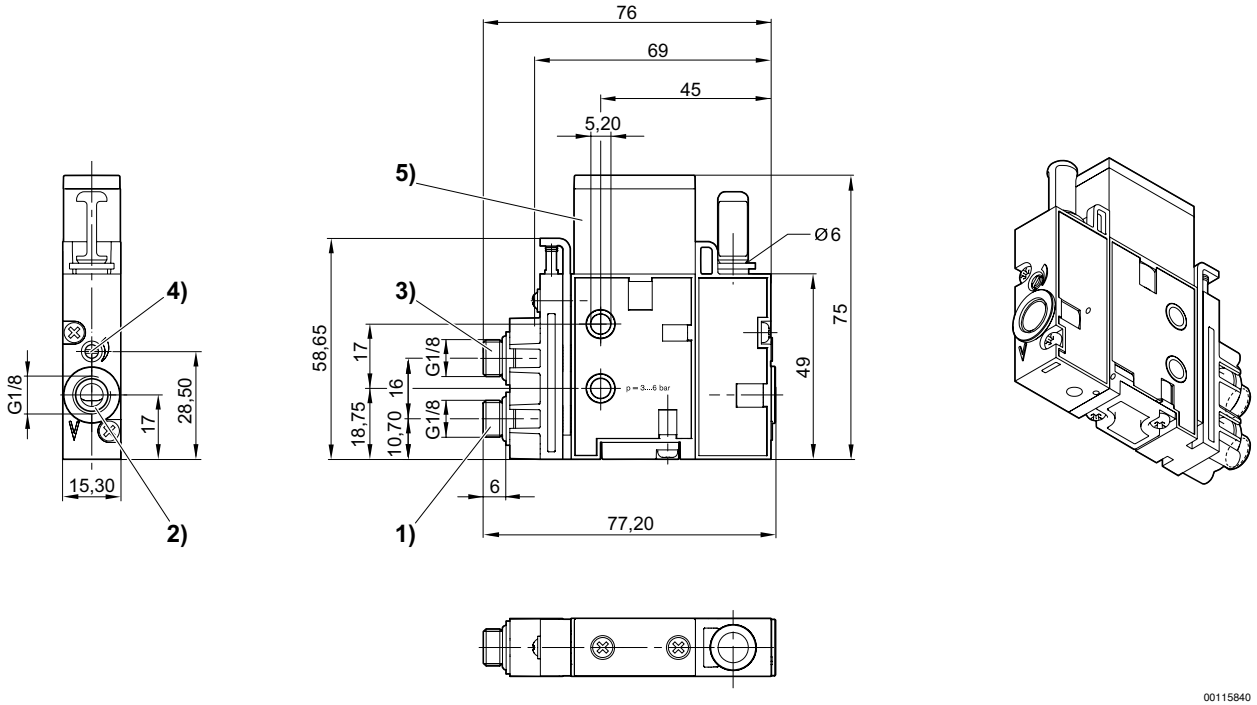

1) air connection (suction)
2) vacuum connection
3) release pulse connection
4) throttle for release pulse
5) silencer

ECV-HF03-...with NO activation

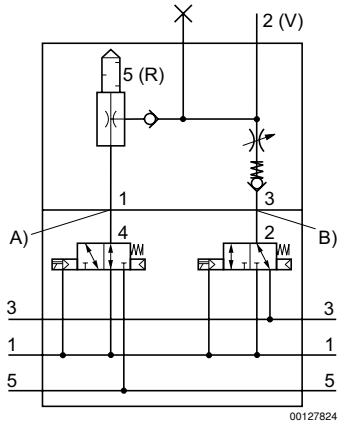

ECV-HF03-...with NC activation

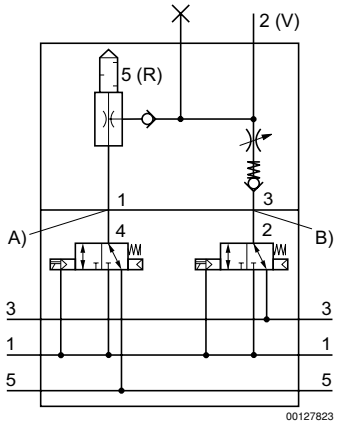

A) Air connection suction
B) release pulse air connection