Rotary actuators → Rack-and-pinion gears

Rotary Compact Module, Series RCM-SE

► angle of rotation: 0 - 180 ° ► Ø12 - 25 mm ► with magnetic piston ► double piston with rack ► Easy–2–Combine-capable ► cushioning: elastic ► with integrated intermediate position ► with air duct

00121302

Working pressure min./max.	4 bar / 8 bar
Ambient temperature min./max.	+5 °C / +60 °C
Medium temperature min./max.	+5 °C / +60 °C
Medium	Compressed air
Max. particle size	5 µm
Oil content of compressed air	0 mg/m³ - 1 mg/m³
Theoretical torque at	6 bar
Materials:	
Housing	Aluminum, anodized
Covers	Aluminum black anodized
Base	Aluminum, black anodized
Seals	Acrylonitrile Butadiene Rubber
Axis	Steel, hardened
Rotary flange	Steel, hardened

Technical Remarks

- The pressure dew point must be at least 15 °C under ambient and medium temperature and may not exceed 3 °C.
- The oil content of compressed air must remain constant during the life cycle.
- Use only the approved oils from Bosch Rexroth, see chapter „Technical information“.
- NOTICE:For positioning without overswing in the intermediate position, it is recommended to limit the mass moment of inertia to 40% of the maximum permissible value!
- The product is a part of the EasyHandling system.

Frame size		RCM-12	RCM-16	RCM-20	RCM-25	
Number of air ducts		2	4	4	4	
Max. permissible axial bearing load	[N]	330	490	620	1160	
Max. permissible radial bearing load	[N]	290	400	560	700	
Max. permissible mass moment of inertia	[kgcm²]	0.7	1.6	3.2	6.3	
Repetitive precision	[°]	0.2	0.2	0.2	0.2	
Theoretical torque	[Nm]	0.95	1.7	3	6.5	

	Frame size	Compressed air connection	angle of rotation	Swivel time min./max.	Air consumption per rotation	Weight	Part No.
			[°]	[s]	[cm³]	[kg]	
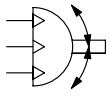	RCM-12	M5	0 - 180	0.32 / --	13.29	0.52	R412000403
	RCM-16			0.3 / --	22.14	0.85	R412000404
	RCM-20			0.35 / --	37.83	1.2	R412000405
	RCM-25			0.35 / --	80.72	2.2	R412000406

Rotary actuators → Rack-and-pinion gears

Rotary Compact Module, Series RCM-SE

► angle of rotation: 0 - 180 ° ► Ø12 - 25 mm ► with magnetic piston ► double piston with rack ► Easy–2–Combine-capable ► cushioning: elastic ► with integrated intermediate position ► with air duct

Movement into end position 180°

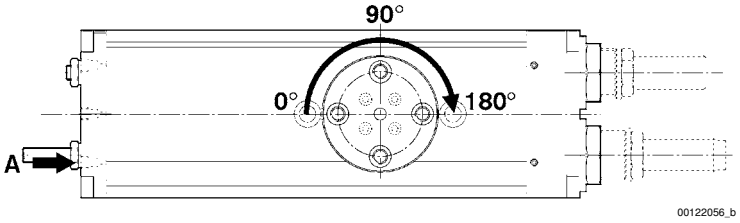

Movement into end position 0°

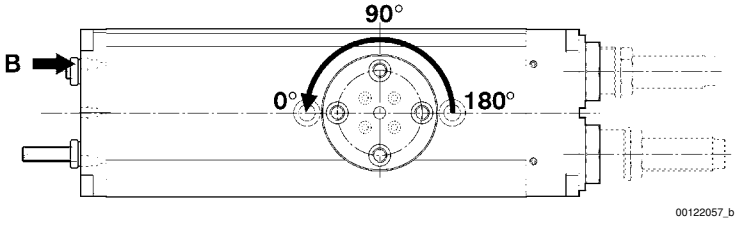

Movement into intermediate position 90°

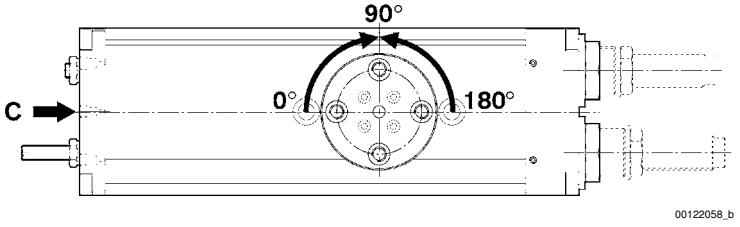

Maximum permissible radial force Fy [N] as a function of v [mm]

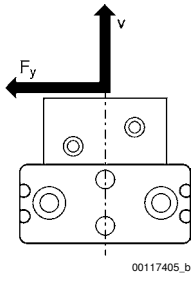

Rotary actuators → Rack-and-pinion gears

Rotary Compact Module, Series RCM-SE

► angle of rotation: 0 - 180 ° ► Ø12 - 25 mm ► with magnetic piston ► double piston with rack ► Easy–2–Combine-capable ► cushioning: elastic ► with integrated intermediate position ► with air duct

RCM 12

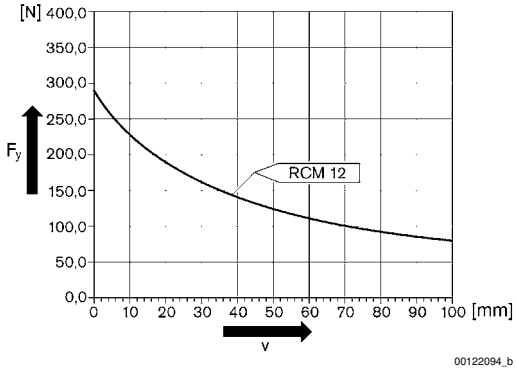

RCM 16 – 25

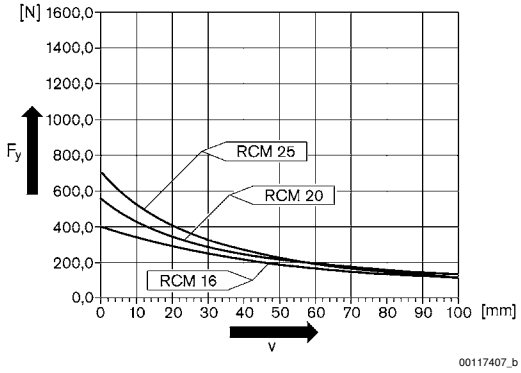

Maximum permissible axial force Fx [N] as a function of u [mm]

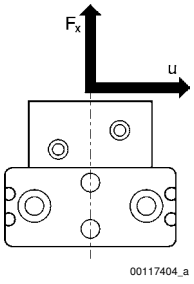

RCM 12

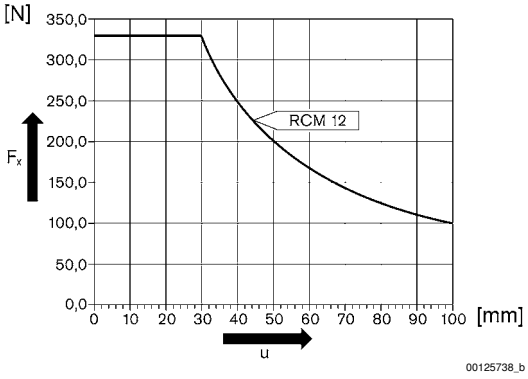

RCM 16 – 25

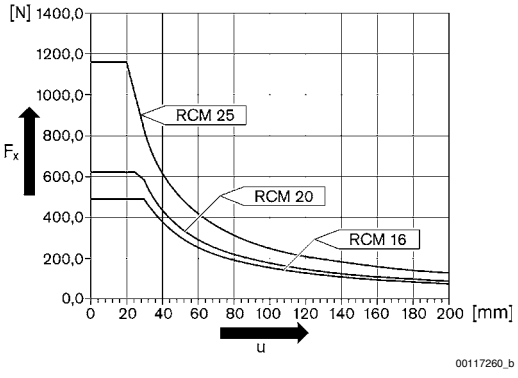

Rotary actuators → Rack-and-pinion gears

Rotary Compact Module, Series RCM-SE

► angle of rotation: 0 - 180 ° ► Ø12 - 25 mm ► with magnetic piston ► double piston with rack ► Easy–2–Combine-capable ► cushioning: elastic ► with integrated intermediate position ► with air duct

RCM-12

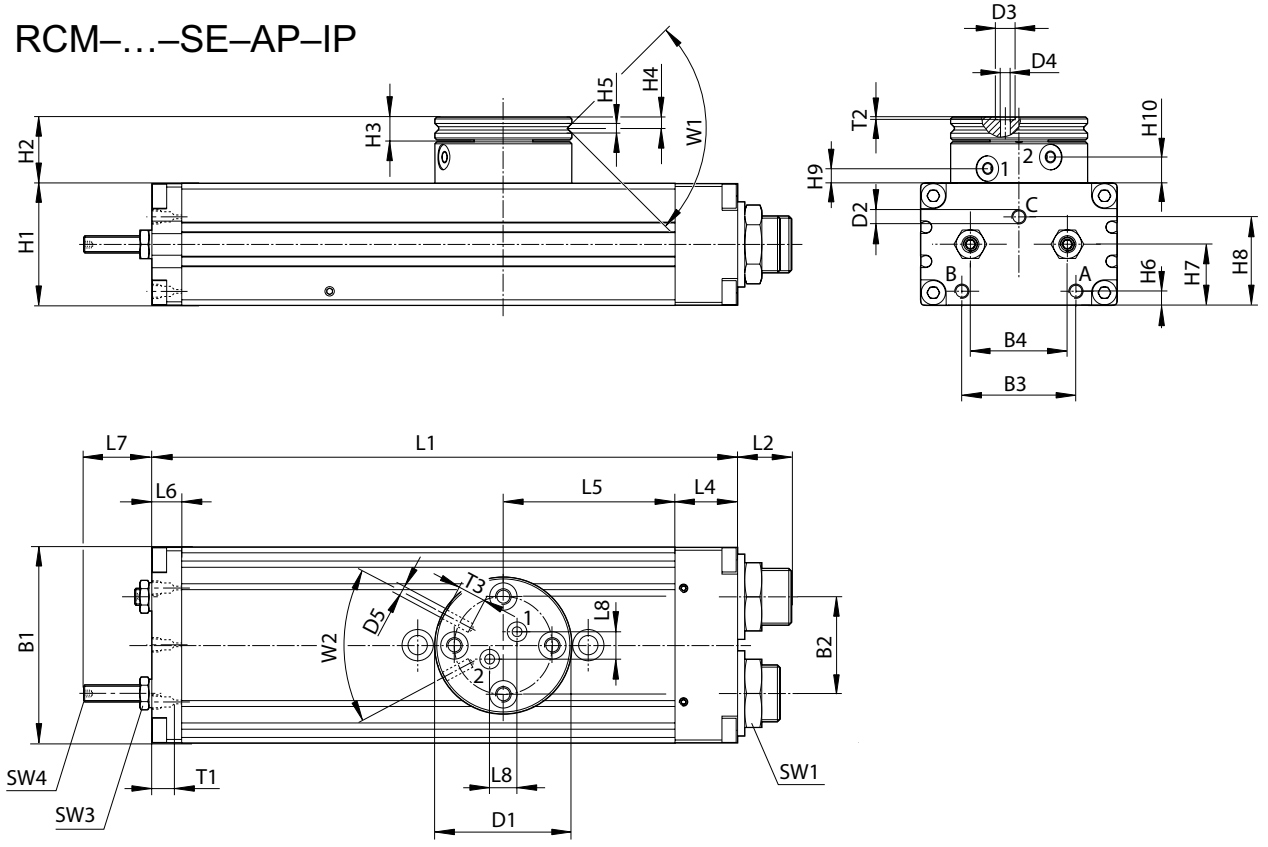

T1 = depth of thread

Frame size	B1	B2	B3	B4	Ø D1	Ø D2	Ø D3	Ø D4	Ø D5	H1	H2	H3	H4
RCM-12	43	18	24	18	35	M5	5	2.5	M3	24	17	6	2.9

Frame size	H5	H6	H7	H8	H9 ±0,2	H10 ±0,2	L1	L2	L4	L5	L6	L7	L8
RCM-12	2.5	3.7	12.5	18.1	3.8	6.7	136	12.5	14	40	8.5	17	7

Frame size	SW1	SW3	SW4	T1	T2	T3	W1	W2					
RCM-12	15	7	2	4	0.7	4	90°	56°					

Rotary actuators → Rack-and-pinion gears

Rotary Compact Module, Series RCM-SE

► angle of rotation: 0 - 180 ° ► Ø12 - 25 mm ► with magnetic piston ► double piston with rack ► Easy–2–Combine-capable ► cushioning: elastic ► with integrated intermediate position ► with air duct

RCM-16/.../-25

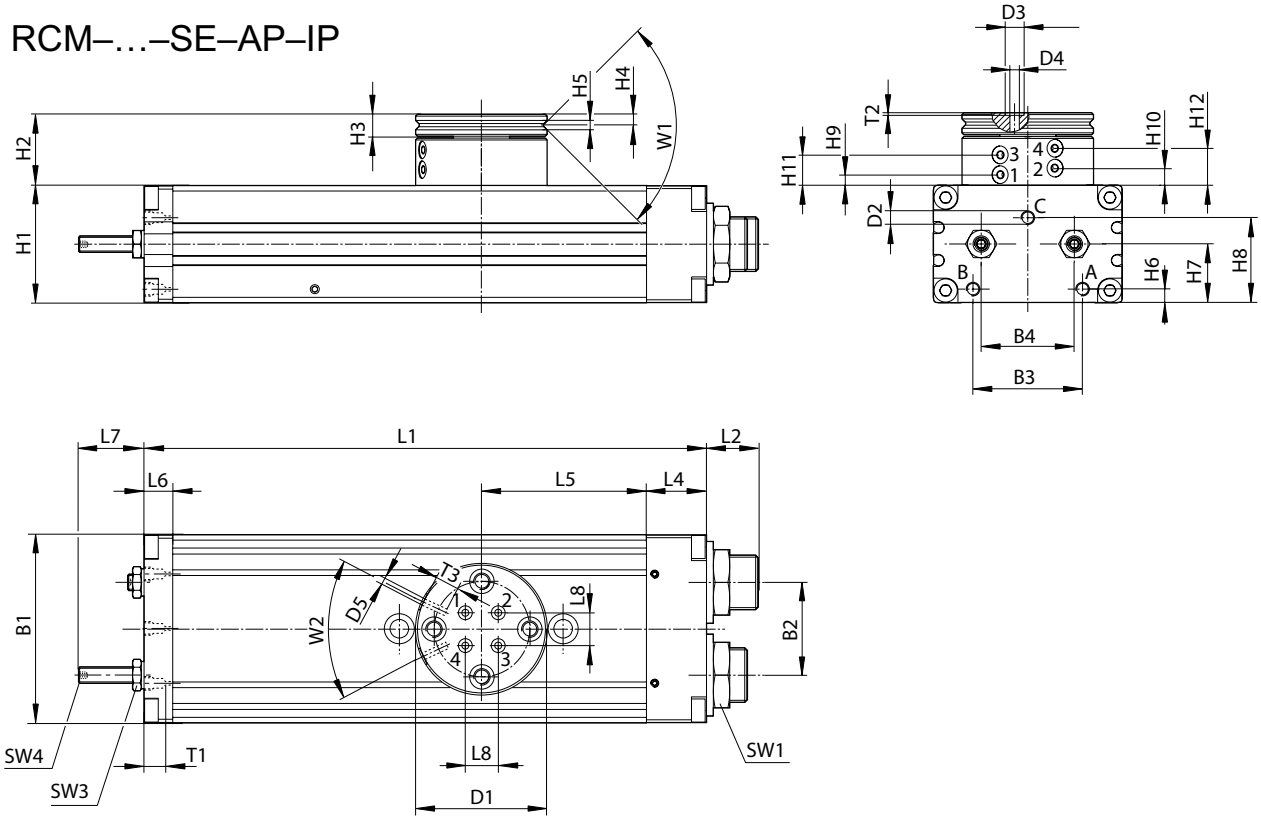

T1 = depth of thread

Frame size	B1	B2	B3	B4	Ø D1	Ø D2	Ø D3	Ø D4	Ø D5	H1	H2	H3	H4
RCM-16	52	24	29	24	40	M5	5	2.5	M3	32	25.5	7	3.3
RCM-20	58	30	30	30	42	M5	5	2.5	M3	37	26	7	3.3
RCM-25	69	34	40	34	48	M5	5	2.5	M3	43	26.5	8	4

Frame size	H5	H6	H7	H8	H9 ±0,2	H10 ±0,2	H11 ±0,2	H12 ±0,2	L1	L2	L4	L5	L6
RCM-16	2.5	5	16	21.1	3.9	6.5	11.1	13.7	140	15.5	18	40	8.5
RCM-20	3	5.5	19	27.1	4.4	7	11.6	14.2	156	15	19	43	8.5
RCM-25	3	5	21.5	31.1	3.9	6.5	11.1	13.7	206	19	22	60.5	10.5

Frame size	L7	L8	SW1	SW3	SW4	T1	T2	T3	W1	W2			
RCM-16	17	6	19	7	2	4	0.7	4	90°	50°			
RCM-20	22	10	19	8	2.5	4	0.7	4	90°	50°			
RCM-25	24	12	23	10	3	4	0.7	4	90°	50°			

Rotary actuators → Rack-and-pinion gears

Rotary Compact Module, Series RCM-SE

► angle of rotation: 0 - 180 ° ► Ø12 - 25 mm ► with magnetic piston ► double piston with rack ► Easy–2–Combine-capable ► cushioning: elastic ► with integrated intermediate position ► with air duct

Mounting and assembly, RCM-12

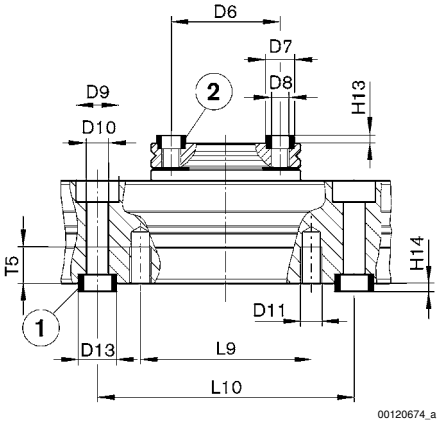

RCM-16/.../-25

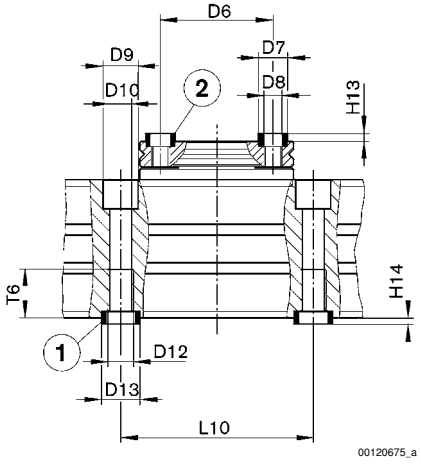

1) centering sleeve, included in the scope of delivery 2) centering sleeve

Frame size	Ø D6 ±0,02	Ø D7 k6	Ø D8	Ø D9	Ø D10	Ø D11	Ø D12	Ø D13 k6	H13 +0,2	H14 +0,2	L9	L10 ±0,02	T5
RCM-12	25	7	M4	10	5.1	M5	–	9	1.6	2.1	40	60	8.5
RCM-16	30	7	M5	10	5	–	M6	9	1.6	2.1	–	60	–
RCM-20	30	7	M5	11	6.8	–	M8	12	1.6	2.1	–	60	–
RCM-25	35	9	M6	11	6.8	–	M8	12	2.1	2.1	–	60	–

Frame size	T6
RCM-12	–
RCM-16	11.1
RCM-20	15.1
RCM-25	15.1