Series MSS, Modular seal system

► For series:PRA, TRB (Ø 32 - 125 mm), ITS (Ø 160 - 320 mm)

20908

Operating pressure	1.5 bar / 10 bar
Medium	Compressed air
Oil content of compressed air	0 mg/m³ / 5 mg/m³
Materials:	
Housing	Aluminum, anodized

Piston Ø	Seal	Scraper	Ambient temperature min./max.	Application area	Part No.
32	Acrylonitrile Butadiene Rubber	Polyester elastomer	-20°C / +70°C	1)	**0496400704**
	Acrylonitrile Butadiene Rubber	Polytetrafluorethylene	-20°C / +70°C	2)	**0496401107**
	Fluorocaoutchouc	Polytetrafluorethylene	-20°C / +120°C	3)	**0496401700**
40	Acrylonitrile Butadiene Rubber	Brass	-20°C / +70°C	2)	**0496400402**
	Fluorocaoutchouc	Brass	-20°C / +120°C	2)	**0496401409**
	Acrylonitrile Butadiene Rubber	Polyester elastomer	-20°C / +70°C	1)	**0496400801**
	Acrylonitrile Butadiene Rubber	Polytetrafluorethylene	-20°C / +70°C	3)	**0496401204**
	Fluorocaoutchouc	Polytetrafluorethylene	-20°C / +120°C	3)	**0496401808**
50, 63	Acrylonitrile Butadiene Rubber	Brass	-20°C / +70°C	2)	**0496400518**
	Fluorocaoutchouc	Brass	-20°C / +120°C	2)	**0496401506**
	Acrylonitrile Butadiene Rubber	Polyester elastomer	-20°C / +70°C	1)	**0496400909**
	Acrylonitrile Butadiene Rubber	Polytetrafluorethylene	-20°C / +70°C	3)	**0496402103**
	Fluorocaoutchouc	Polytetrafluorethylene	-20°C / +120°C	3)	**0496401905**
80, 100	Acrylonitrile Butadiene Rubber	Brass	-20°C / +120°C	2)	**0496400607**
	Fluorocaoutchouc	Brass	-20°C / +120°C	2)	**0496401603**
	Acrylonitrile Butadiene Rubber	Polyester elastomer	-20°C / +70°C	1)	**0496401018**
	Acrylonitrile Butadiene Rubber	Polytetrafluorethylene	-20°C / +70°C	3)	**0496402200**
	Fluorocaoutchouc	Polytetrafluorethylene	-20°C / +120°C	3)	**0496402006**
125	Acrylonitrile Butadiene Rubber	Brass	-20°C / +70°C	2)	**0496301404**
	Fluorocaoutchouc	Brass	-20°C / +120°C	2)	**0496303105**
	Acrylonitrile Butadiene Rubber	Polyester elastomer	-20°C / +70°C	1)	**0496301307**
	Acrylonitrile Butadiene Rubber	Polytetrafluorethylene	-20°C / +70°C	3)	**0496301706**
	Fluorocaoutchouc	Polytetrafluorethylene	-20°C / +120°C	3)	**0496303202**

1) Paper/printing industry / Textile industry
2) Chemical industry / Sugar production / Steel production / Automotive industry / Woodworking industry
3) Textile industry / Food industry / Chemical industry / Sugar production

Part numbers marked in bold are available from the central warehouse in Germany, see the shopping basket for more detailed information

Series MSS, Modular seal system

► For series:PRA, TRB (Ø 32 - 125 mm), ITS (Ø 160 - 320 mm)

Piston Ø	Seal	Scraper	Ambient temperature min./max.	Application area	Part No.
160, 200	Acrylonitrile Butadiene Rubber	Acrylonitrile Butadiene Rubber	-20°C / +80°C	2)	**R412018749**
	Acrylonitrile Butadiene Rubber	Brass	-20°C / +80°C		**R412018750**
	Fluorocaoutchouc	Fluorocaoutchouc	-10°C / +150°C		**R412018751**
	Fluorocaoutchouc	Brass	-10°C / +150°C		**R412018752**
250	Acrylonitrile Butadiene Rubber	Acrylonitrile Butadiene Rubber	-20°C / +80°C	2)	**R412018753**
	Acrylonitrile Butadiene Rubber	Brass	-20°C / +80°C		**R412018754**
	Fluorocaoutchouc	Fluorocaoutchouc	-10°C / +150°C		**R412018755**
	Fluorocaoutchouc	Brass	-10°C / +150°C		**R412018756**
320	Acrylonitrile Butadiene Rubber	Acrylonitrile Butadiene Rubber	-20°C / +80°C	2)	**R412018757**
	Acrylonitrile Butadiene Rubber	Brass	-20°C / +80°C		**R412018758**
	Fluorocaoutchouc	Fluorocaoutchouc	-10°C / +150°C		**R412018759**
	Fluorocaoutchouc	Brass	-10°C / +150°C		**R412018760**

1) Paper/printing industry / Textile industry
2) Chemical industry / Sugar production / Steel production / Automotive industry / Woodworking industry
3) Textile industry / Food industry / Chemical industry / Sugar production

For cylinder diameters: 32-40 mm

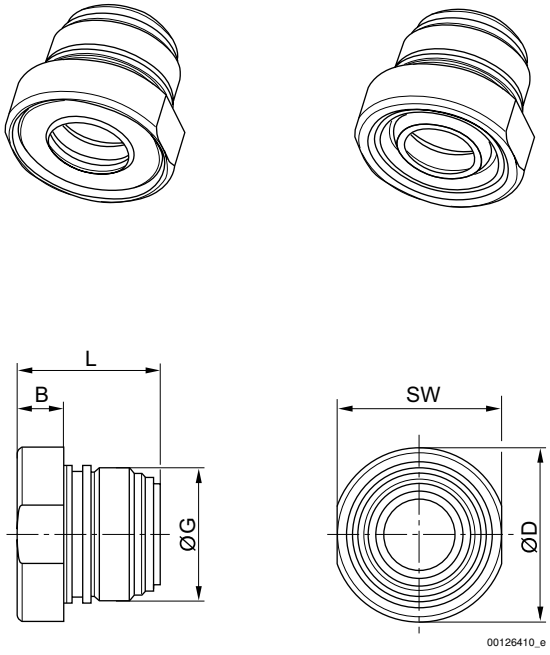

Series MSS, Modular seal system

► For series:PRA, TRB (Ø 32 - 125 mm), ITS (Ø 160 - 320 mm)

For cylinder diameters: 50-125 mm

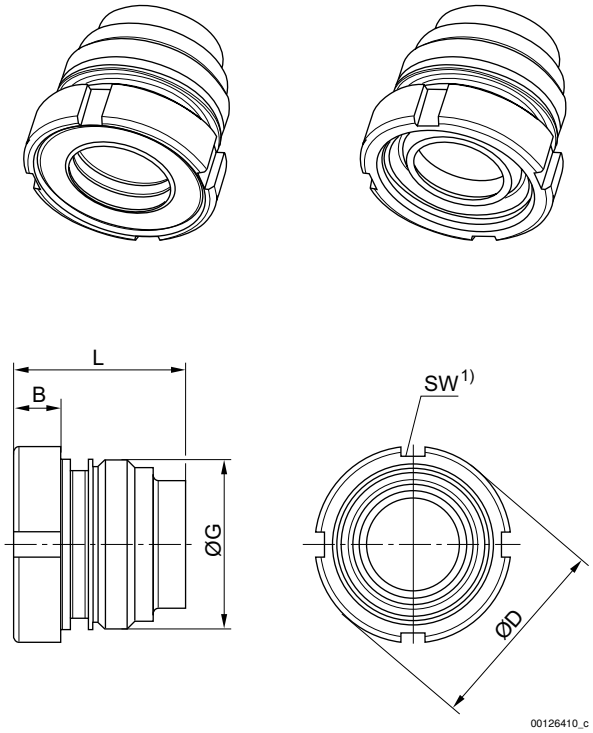

1) Can be mounted with hook wrench in accordance with DIN 1810 A

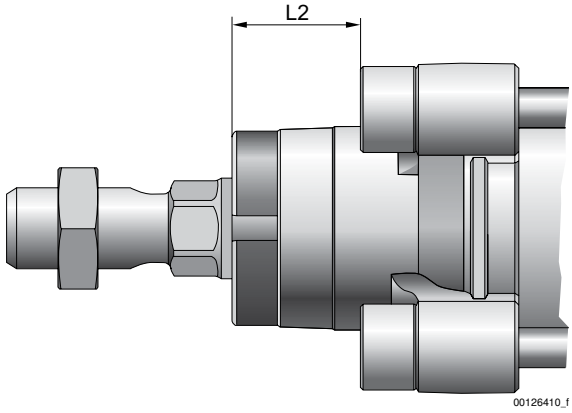

Series MSS, Modular seal system

► For series:PRA, TRB (Ø 32 - 125 mm), ITS (Ø 160 - 320 mm)

For cylinder diameters: 160-320 mm

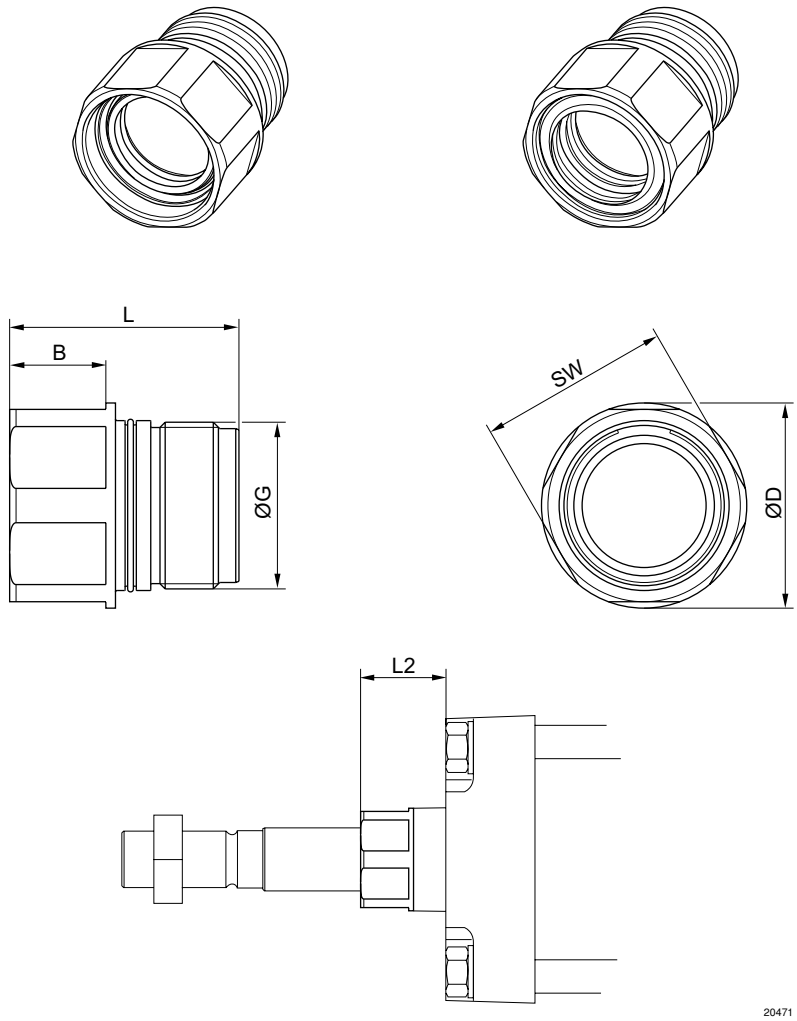

Part No.	Ø	B	ØD	G	L	L2	SW					
0496400704	32	6.7	24.5	M22x1	23	16.25	23					
0496401107	32	6.7	24.5	M22x1	23	16.25	23					
0496401700	32	6.7	24.5	M22x1	23	16.25	23					
0496400402	40	9.2	34	M26x1,5	28.1	18.25	32					
0496401409	40	9.2	34	M26x1,5	28.1	18.25	32					
0496400801	40	9.2	34	M26x1,5	28.1	18.25	32					
0496401204	40	9.2	34	M26x1,5	28.1	18.25	32					
0496401808	40	9.2	34	M26x1,5	28.1	18.25	32					
0496400518	50, 63	9	38.5	M33x2	33.5	25	40-42					
0496401506	50, 63	9	38.5	M33x2	33.5	25	40-42					
0496400909	50, 63	9	38.5	M33x2	33.5	25	40-42					
0496402103	50, 63	9	38.5	M33x2	33.5	25	40-42					
0496401905	50, 63	9	38.5	M33x2	33.5	25	40-42					
0496400607	80, 100	10	44	M40x2	44	33	45-50					
0496401603	80, 100	10	44	M40x2	44	33	45-50					
0496401018	80, 100	10	44	M40x2	44	33	45-50					

Series MSS, Modular seal system

► For series:PRA, TRB (Ø 32 - 125 mm), ITS (Ø 160 - 320 mm)

Part No.	Ø	B	ØD	G	L	L2	SW					
0496402200	80, 100	10	44	M40x2	44	33	45-50					
0496402006	80, 100	10	44	M40x2	44	33	45-50					
0496301404	125	12	57	M50x2	56	45	58-62					
0496303105	125	12	57	M50x2	56	45	58-62					
0496301307	125	12	57	M50x2	56	45	58-62					
0496301706	125	12	57	M50x2	56	45	58-62					
0496303202	125	12	57	M50x2	56	45	58-62					
R412018749	160, 200	30	64	M52x3	71.5	56	60					
R412018750	160, 200	30	64	M52x3	71.5	56	60					
R412018751	160, 200	30	64	M52x3	71.5	56	60					
R412018752	160, 200	30	64	M52x3	71.5	56	60					
R412018753	250	31.5	88	M70x3	85.5	67	80					
R412018754	250	31.5	88	M70x3	85.5	67	80					
R412018755	250	31.5	88	M70x3	85.5	67	80					
R412018756	250	31.5	88	M70x3	85.5	67	80					
R412018757	320	37	108	M85x4	97	76	95					
R412018758	320	37	108	M85x4	97	76	95					
R412018759	320	37	108	M85x4	97	76	95					
R412018760	320	37	108	M85x4	97	76	95					