**Preparation of compressed air → Maintenance units and components**

# Active carbon filter, Series MH1-FLA

**► G 1/4 - G 1/2**

17157

| | |
|---|---|
| Version | Active carbon filter |
| Mounting orientation | vertical |
| Working pressure min./max. | 0 bar / 17 bar |
| Medium | Compressed air |
| Medium temperature min./max. | -30°C / +80°C |
| Ambient temperature min./max. | -30°C / +80°C |
| Filter element | exchangeable |
| Materials: | |
| Housing | Stainless steel, acid-proof |
| Reservoir | Stainless steel, acid-proof |
| Filter insert | Active carbon |

| Technical Remarks |
|---|
| ■ The pressure dew point must be at least 15 °C under ambient and medium temperature and may not exceed 3 °C. |
| ■ Recommended pre-filtering: 0.01 $\mu$m |
| ■ max. residual oil content at the outlet: 0.005 mg/m³ |

| | Port | Qn | Weight | Note | Part No. |
|---|---|---|---|---|---|
| | | [l/min] | [kg] | | |
| 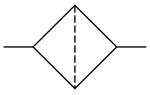 | G 1/4 | 170 | 0.42 | Fig. 1 | **R432034655** |
| | G 1/2 | 680 | 1.65 | Fig. 2 | **R432034662** |
| Nominal flow Qn at 6.3 bar and Δp = 0.2 bar | | | | | |

**Flow rate characteristic, Fig. 1**

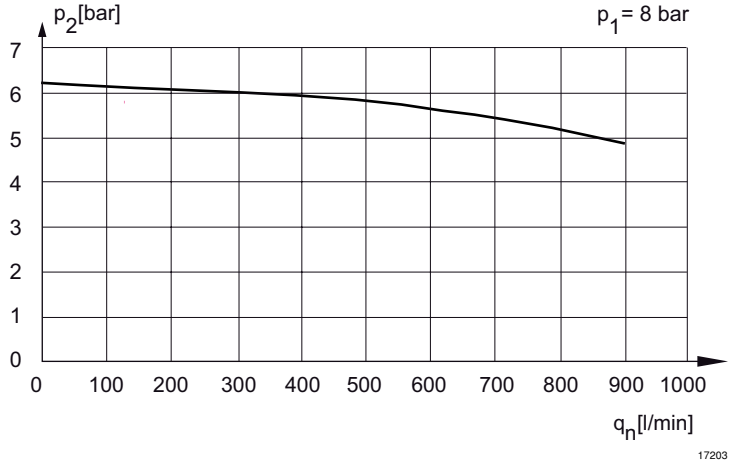


p1 = Working pressure
p2 = Secondary pressure
qn = Nominal flow

**Preparation of compressed air → Maintenance units and components**

# Active carbon filter, Series MH1-FLA

**► G 1/4 - G 1/2**

**Flow rate characteristic, Fig. 2**

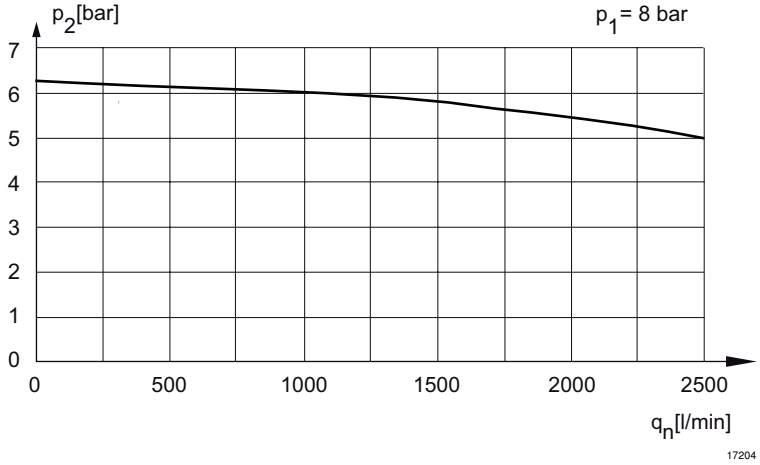


p1 = Working pressure
p2 = Secondary pressure
qn = Nominal flow

**Dimensions in mm**

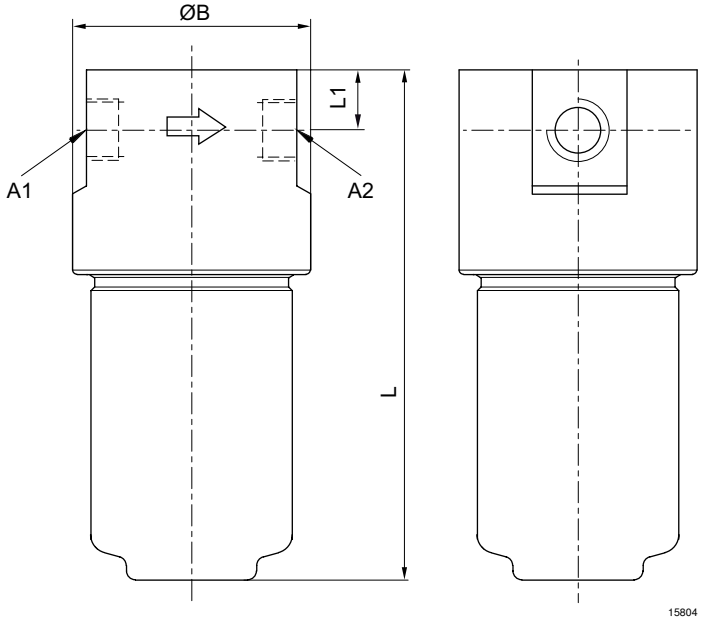


A1 = input
A2 = output

| Part No. | A1 | A2 | L | L1 | ØB | | | | | | | |
|---|---|---|---|---|---|---|---|---|---|---|---|---|
| **R432034655** | G 1/4 | G 1/4 | 121.9 | 10.2 | 40.6 | | | | | | | |
| **R432034662** | G 1/2 | G 1/2 | 152.4 | 17.5 | 63.5 | | | | | | | |