Preparation of compressed air → Maintenance units and components

Pressure regulator, Series MH1-RGS

► G 1/4 - G 1/2 ► Qn=325 - 2000 l/min ► Activation: mechanical

17158_a

Mounting orientation	Any
Working pressure min./max.	0.5 bar / 17 bar
Medium	Compressed air
Medium temperature min./max.	-30°C / +80°C
Ambient temperature min./max.	-30°C / +80°C
Regulator type	Diaphragm-type pressure regulator
Regulator function	with relieving air exhaust
Adjustment range min./max.	0.5 bar / 9 bar
Pressure supply	single
Materials:	
Housing	Stainless steel, acid-proof
Seals	Acrylonitrile Butadiene Rubber

Technical Remarks
■ The pressure dew point must be at least 15 °C under ambient and medium temperature and may not exceed 3 °C.

	Port	Qn	Weight	Note	Part No.
		[l/min]	[kg]		
	G 1/4	325	0.3	Fig. 1	**R432034650**
	G 1/2	2000	1.01	Fig. 2	**R432034657**
Max. pressure gauge Ø in blocked state [mm]: 50 Nominal flow Qn at p1 = 6.3 bar and Δp = 1 bar					

Flow rate characteristic, Fig. 1

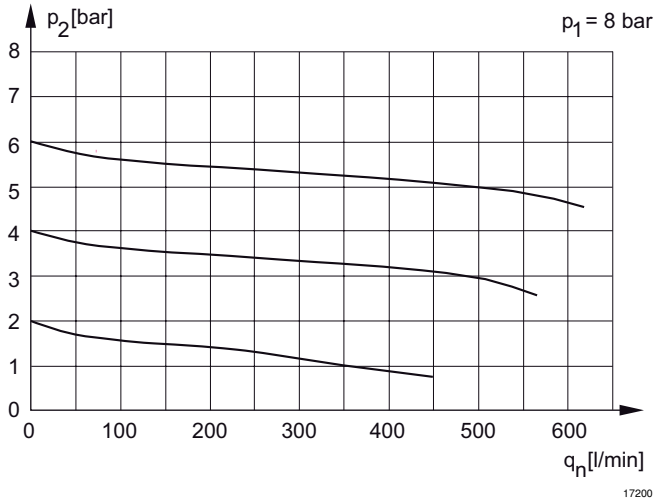

p1 = Working pressure
p2 = Secondary pressure
qn = Nominal flow

Pressure regulator, Series MH1-RGS

► G 1/4 - G 1/2 ► Qn=325 - 2000 l/min ► Activation: mechanical

Flow rate characteristic, Fig. 2

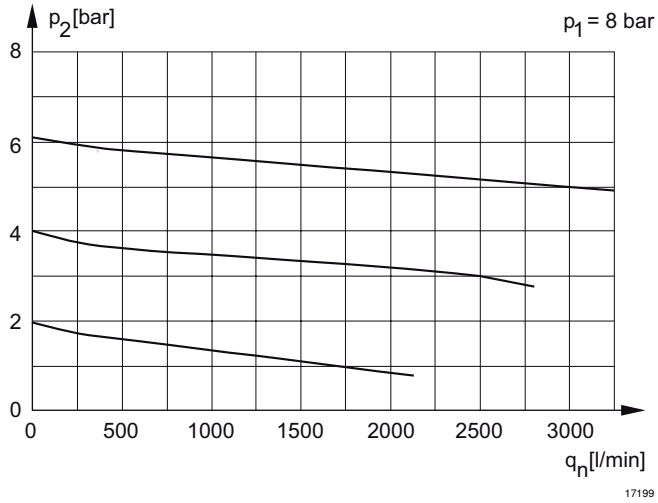

p1 = Working pressure
p2 = Secondary pressure
qn = Nominal flow

Dimensions in mm, Fig. 1

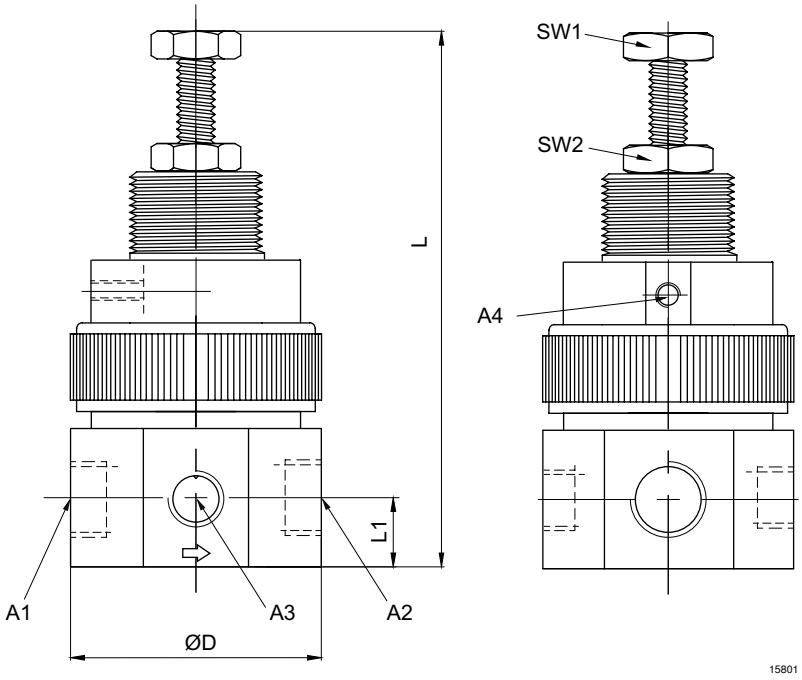

A1 = input
A2 = output
A3 = pressure gauge connection
A4 = relieving exhaust

Preparation of compressed air → Maintenance units and components

Pressure regulator, Series MH1-RGS

► G 1/4 - G 1/2 ► Qn=325 - 2000 l/min ► Activation: mechanical

A1	A2	A3	A4	L *)	L1	ØD	SW1	SW2					
G 1/4	G 1/4	G 1/8	M5	85	9.9	35.8	10	10					
*) max.													

Dimensions in mm, Fig. 2

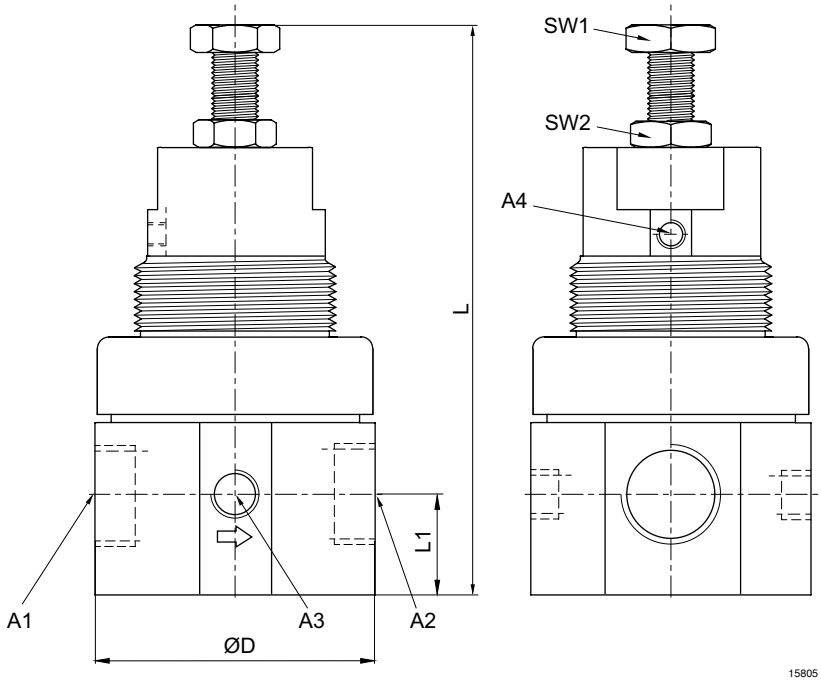

A1 = input
A2 = output
A3 = pressure gauge connection
A4 = relieving exhaust

A1	A2	A3	A4	L *)	L1	ØD	SW1	SW2					
G 1/2	G 1/2	G 1/8	M5	121	20.6	57.5	13	13					
*) max.													