Gripper and vacuum technology → Vacuum suction grippers

Series FSO

► F = 3.1 - 112.6 N ► internal thread ► heat resistant

00121331

Ambient temperature min./max.	-30°C / +180°C
Min./max. temporary ambient temperature (<30 s)	-50°C / +220°C
Hardness according to standard ISO 7619-1:2010	60 ± 5 Shore A
Abrasion value according to DIN 535 16 ISO 4649:2002	180-200 mm³
Materials:	
Connector	Aluminum
Vacuum	Fluoromethyl silicone

Technical Remarks
■ To be used on long, flat, and slightly curved surfaces.

	Compressed air connection	Holding force*)	Volume	Max. curving on object Rmin	Weight	Delivery unit	Part No.
		[N]	[cm³]	[mm]	[kg]	[Piece(s)]	
	M5	3.1	0.036	4	0.004	1	1820415145
	M5	4.5	0.058	4	0.004		1820415146
	G 1/8	8	0.138	8	0.007		1820415147
	G 1/8	12.2	0.28	8	0.007		1820415148
	G 1/4	28.2	0.98	10	0.014		1820415149
	G 1/4	50.1	2.3	20	0.018		1820415150
	G 1/4	78.3	4.7	30	0.026		1820415151
	G 1/4	112.6	8.5	35	0.035		1820415152

*) Theoretical value at 60% vacuum level, without safety factor

Max. curving on object Rmin

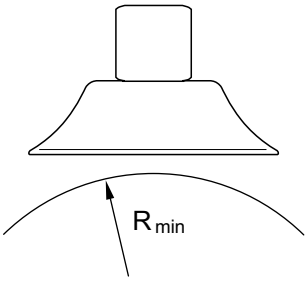

00132217

Series FSO

► F = 3.1 - 112.6 N ► internal thread ► heat resistant

Dimensions

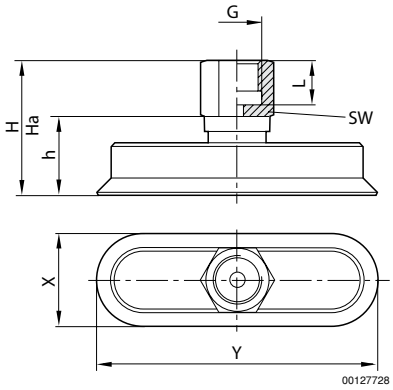

Part No.	G	X	Y	Ha*)	H	h	L	SW				
1820415145	M5	5	15	21.3	22	12	8.5	8				
1820415146	M5	6	18	21.2	22	12	8.5	8				
1820415147	G 1/8	8	24	24	25	12	9	14				
1820415148	G 1/8	10	30	23.5	25	12	9	14				
1820415149	G 1/4	15	45	34	36	21	12	17				
1820415150	G 1/4	20	60	33.5	36	21	12	17				
1820415151	G 1/4	25	75	33.2	36	21	12	17				
1820415152	G 1/4	30	90	32.5	36	21	12	17				

*) Height for vacuum operation