Ejector, Series EBS

► Thread connection ► pneumatic control, T-design ► with silencer ► vacuum switch: electronic, non-adjustable ► 1 x PNP

00125702

Type	Ejector
Ambient temperature min./max.	+0°C / +50°C
Medium temperature min./max.	+0°C / +50°C
Working pressure min./max.	3 bar / 6 bar
Medium	Compressed air
Max. particle size	5 µm
Oil content of compressed air	0 mg/m³ - 1 mg/m³
Protection class	IP 40
Display	LED
Hysteresis	0,02 bar
Repeatability (% of full scale value)	± 1 %
DC operating voltage	24 V
Voltage tolerance DC	-20% / +10%
Switch output current Max.	60 mA
Local power consumption	<15 mA
Status display	LED
Materials:	
Housing	Polyamide, fiber-glass reinforced
Seal	Acrylonitrile Butadiene Rubber
Nozzle	Aluminum
Threaded bushing	Aluminum, anodized
Silencers	Polyethylene

Technical Remarks
■ Note: All data refers to an ambient pressure of 1013 mbar and an ambient temperature of 20°C.
■ The pressure dew point must be at least 15 °C under ambient and medium temperature and may not exceed 3 °C.

	Type	Nozzle Ø	Com-pressed air connection	Vacuum connection	Max. vacuum level at p.opt	Max. suction capacity	Part No.
					[%]	[l/min]	
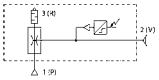	EBS-PT-05-NN	0.5	M5	M5	84	7	R412007479
	EBS-PT-07-NN	0.7	M5	M5	85	16	R412007480
	EBS-PT-10-NN	1	G 1/8	G 1/8	85	38	R412007481
	EBS-PT-15-NN	1.5	G 1/8	G 1/8	85	70	R412007482
	EBS-PT-20-NN	2	G 1/4	G 3/8	86	123	R412007483
	EBS-PT-25-NN	2.5	G 1/4	G 3/8	82	218	R412007484

Gripper and vacuum technology →

Ejector, Series EBS

► Thread connection ► pneumatic control, T-design ► with silencer ► vacuum switch: electronic, non-adjustable ► 1 x PNP

Part No.	Air consumption at p.opt.	Sound pressure level intake effect	Sound pressure level intake effect	Protection against overpressure [max.]	Switching point	Weight	Fig.
	[l/min]	[dBA]	[dBA]	[bar]	[bar]	[kg]	
R412007479	14	53	58	5	-0.6	0.086	Fig. 1
R412007480	25	59	65			0.086	Fig. 1
R412007481	48	59	65			0.105	Fig. 2
R412007482	118	66	72			0.105	Fig. 2
R412007483	208	68	77			0.143	Fig. 3
R412007484	311	75	78			0.143	Fig. 3

Switching point: non-adjustable vacuum switch
Output signal: 1 x PNP, NO (normally open contact)

Vacuum p2 depending on working pressure p1

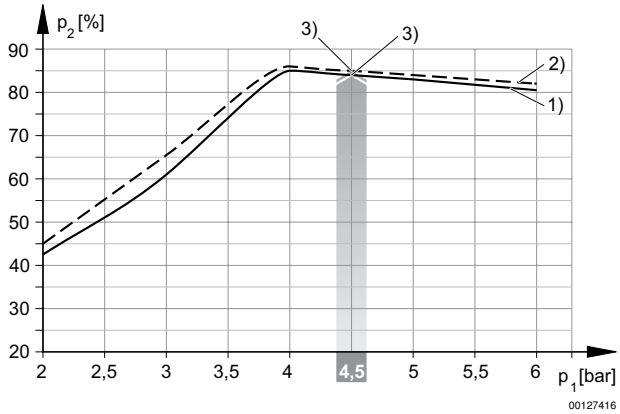

1) = Ø nozzle 0.5 mm 2) = Ø nozzle 0.7 mm
3) Working pressure p.opt.

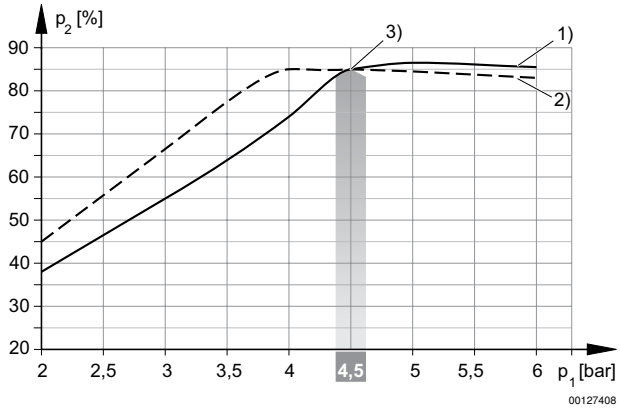

1) = Ø nozzle 1.0 mm 2) = Ø nozzle 1.5 mm
3) Working pressure p.opt.

Ejector, Series EBS

► Thread connection ► pneumatic control, T-design ► with silencer ► vacuum switch: electronic, non-adjustable ► 1 x PNP

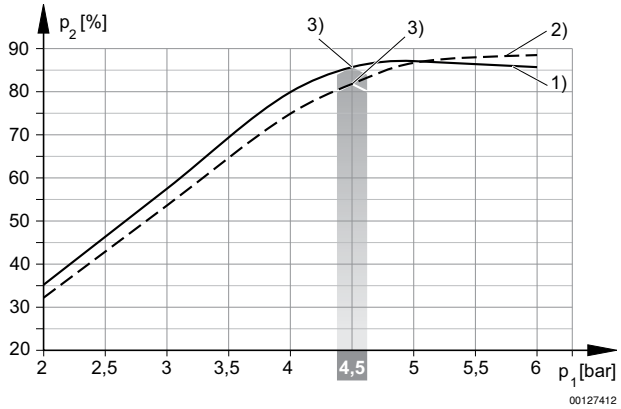

1) = Ø nozzle 2.0 mm 2) = Ø nozzle 2.5 mm
3) Working pressure p.opt.

Suction capacity qs depending on working pressure p1

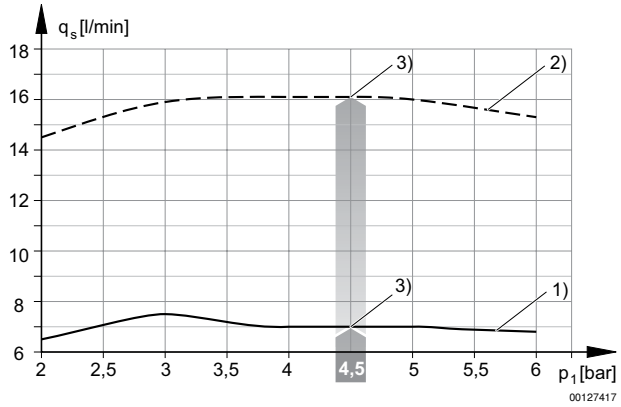

1) = Ø nozzle 0.5 mm 2) = Ø nozzle 0.7 mm
3) Working pressure p.opt.

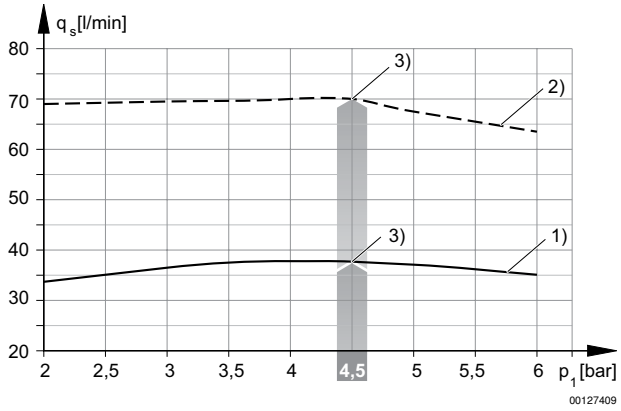

1) = Ø nozzle 1.0 mm 2) = Ø nozzle 1.5 mm
3) Working pressure p.opt.

Ejector, Series EBS

► Thread connection ► pneumatic control, T-design ► with silencer ► vacuum switch: electronic, non-adjustable ► 1 x PNP

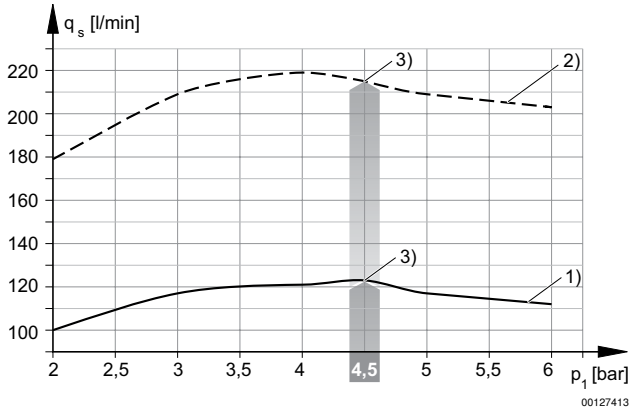

1) = Ø nozzle 2.0 mm 2) = Ø nozzle 2.5 mm
3) Working pressure p.opt.

Evacuation time tE depending on vacuum p2 for 1 l volume (with optimal operating pressure p1opt)

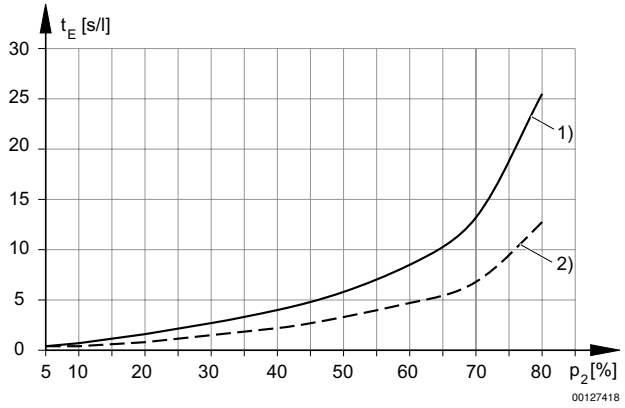

1) = Ø nozzle 0.5 mm 2) = Ø nozzle 0.7 mm

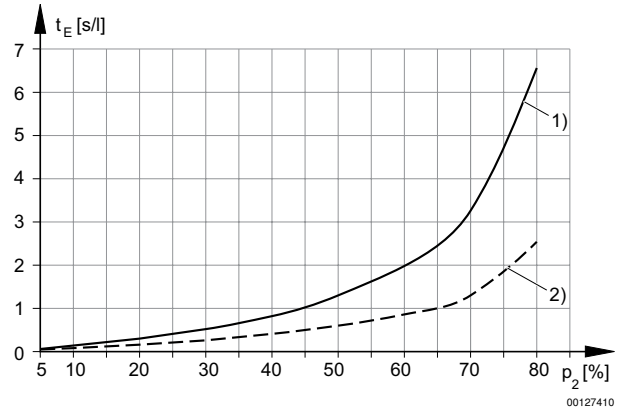

1) = Ø nozzle 1.0 mm 2) = Ø nozzle 1.5 mm

Ejector, Series EBS

► Thread connection ► pneumatic control, T-design ► with silencer ► vacuum switch: electronic, non-adjustable ► 1 x PNP

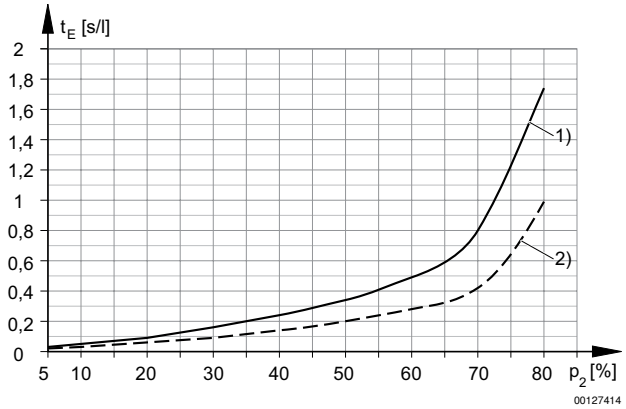

1) = Ø nozzle 2.0 mm 2) = Ø nozzle 2.5 mm

Air consumption qv depending on working pressure p1

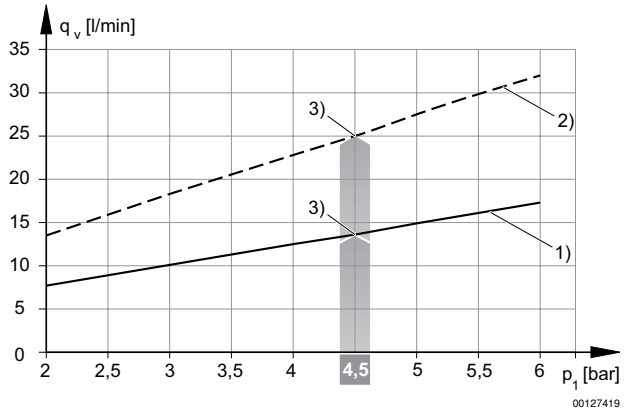

1) = Ø nozzle 0.5 mm 2) = Ø nozzle 0.7 mm
3) Working pressure p.opt.

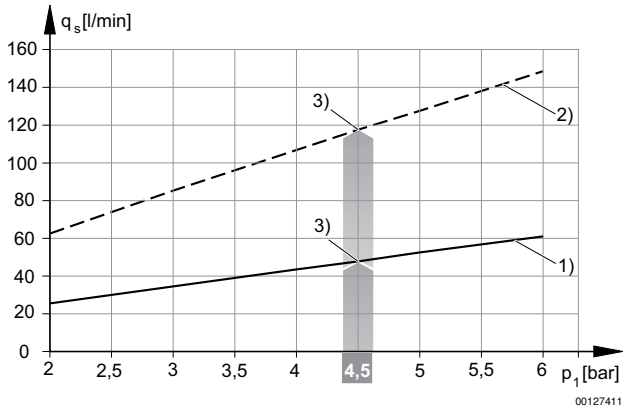

1) = Ø nozzle 1.0 mm 2) = Ø nozzle 1.5 mm
3) Working pressure p.opt.

Ejector, Series EBS

► Thread connection ► pneumatic control, T-design ► with silencer ► vacuum switch: electronic, non-adjustable ► 1 x PNP

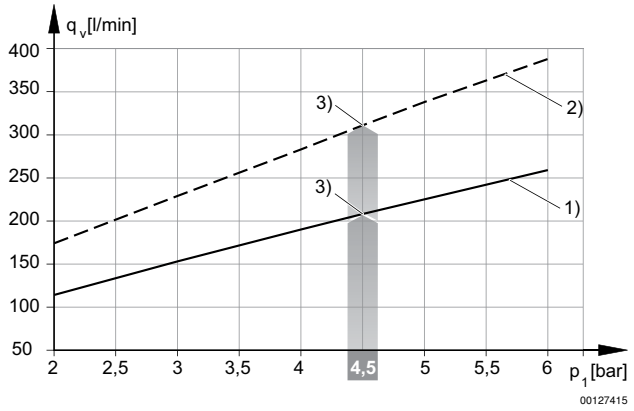

1) = Ø nozzle 2.0 mm 2) = Ø nozzle 2.5 mm
3) Working pressure p.opt.

Fig. 1

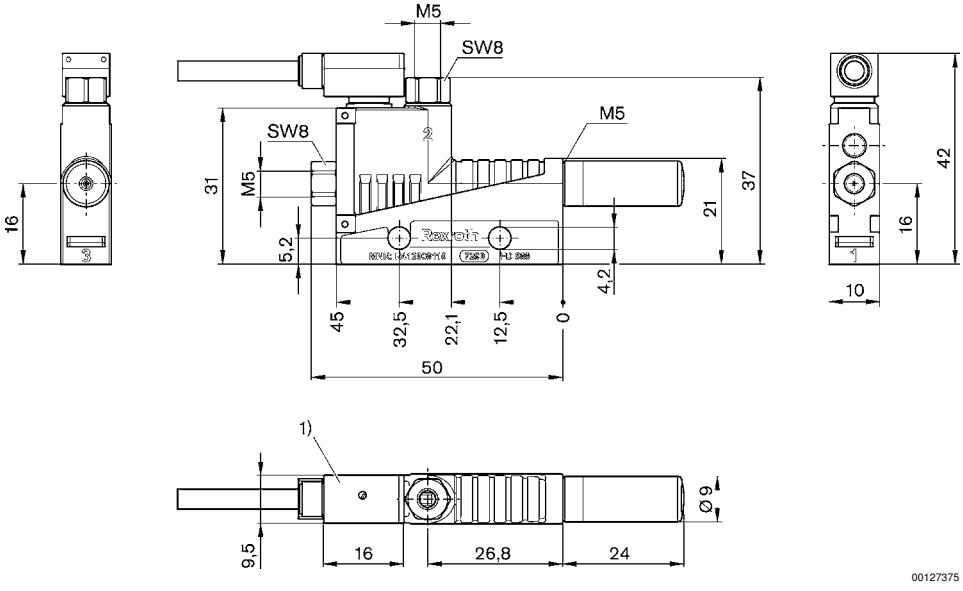

1) Vacuum switch is rotatable, not exchangeable
Cable length, 3 m, 3-wire, shielded

Ejector, Series EBS

► Thread connection ► pneumatic control, T-design ► with silencer ► vacuum switch: electronic, non-adjustable ► 1 x PNP

Fig. 2

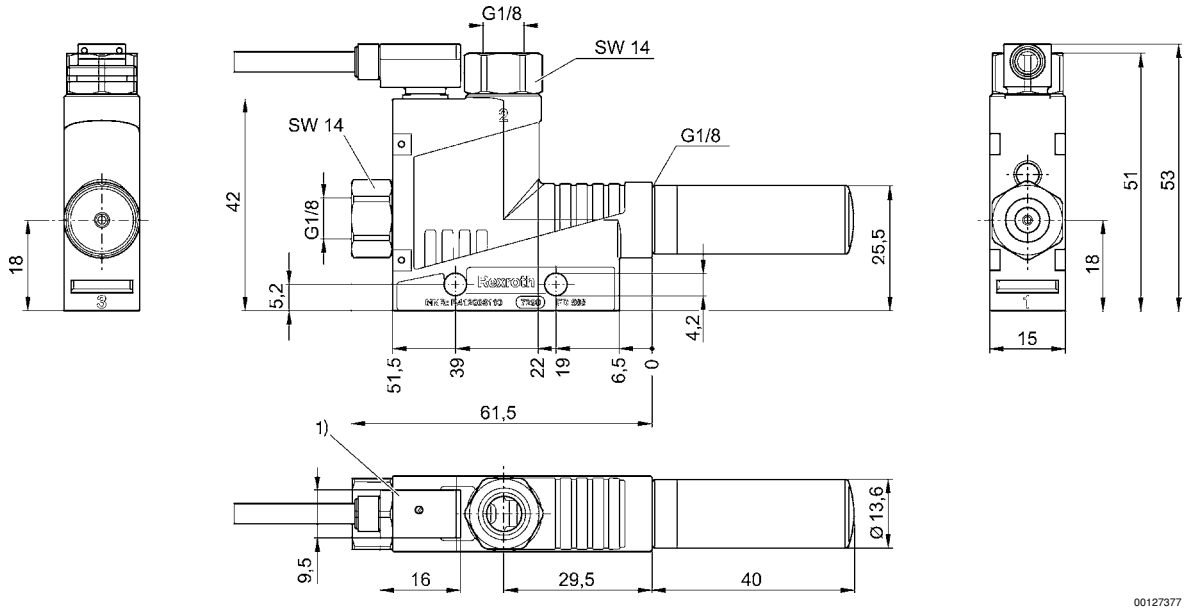

1) Vacuum switch is rotatable, not exchangeable
Cable length, 3 m, 3-wire, shielded

Fig. 3

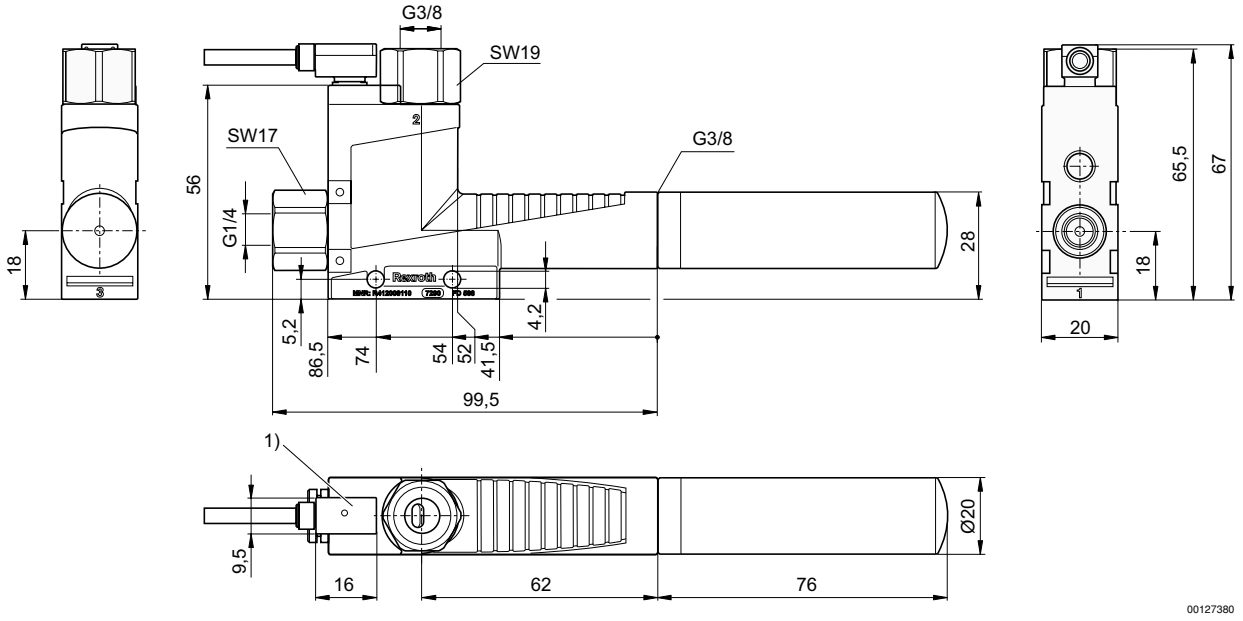

1) Vacuum switch is rotatable, not exchangeable
Cable length, 3 m, 3-wire, shielded