Preparation of compressed air → Maintenance units and components

Filter, Series AS3-FLS

► G 3/8 - G 1/2 ► filter porosity: 40 µm ► suitable for ATEX

00119385

ATEX	II 2G2D T4 X
Version	Standard filter, Can be assembled into blocks
Mounting orientation	vertical
Working pressure min./max.	See table below
Medium	Compressed air
Medium temperature min./max.	-10°C / +50°C
Ambient temperature min./max.	-10°C / +50°C
Filter reservoir volume	49 cm³
Filter element	exchangeable
filter porosity	40 µm
Condensate drain	See table below
Materials:	
Housing	Polyamide
Front plate	Acrylonitrile butadiene styrene
Seals	Acrylonitrile Butadiene Rubber
Threaded bushing	Die cast zinc
Reservoir	Polycarbonate
Protective guard	Polyamide
Filter insert	Sintered bronze

Technical Remarks
■ The pressure dew point must be at least 15 °C under ambient and medium temperature and may not exceed 3 °C.
■ Max. residual oil content acc. to ISO 8573-4 at the outlet: 10 mg/m³

	Port	Qn	Working pressure min./max.	Condensate drain	Weight	Part No.
		[l/min]			[kg]	
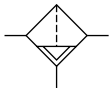	G 3/8	3500	1.5 / 16	semi-automatic, open without pressure	0.361	R412007003
	G 3/8		1.5 / 16	fully automatic, open without pressure	0.41	R412007004
	G 3/8		0 / 16	fully automatic, closed without pressure	0.41	**R412007005**
	G 1/2		1.5 / 16	semi-automatic, open without pressure	0.361	**R412007012**
	G 1/2		1.5 / 16	fully automatic, open without pressure	0.41	**R412007013**
	G 1/2		0 / 16	fully automatic, closed without pressure	0.41	**R412007014**
Nominal flow Qn at p1 = 6.3 bar and Δp = 1 bar						

Preparation of compressed air → Maintenance units and components

Filter, Series AS3-FLS

► G 3/8 - G 1/2 ► filter porosity: 40 µm ► suitable for ATEX

Flow rate characteristic

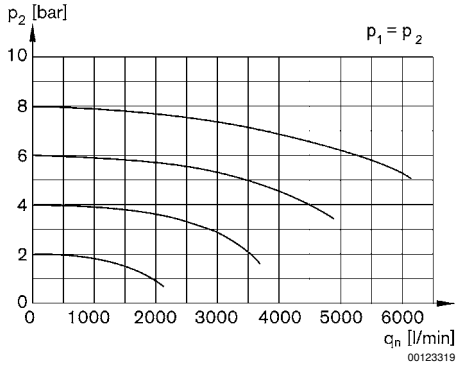

p1 = Working pressure
p2 = Secondary pressure
qn = Nominal flow

Dimensions

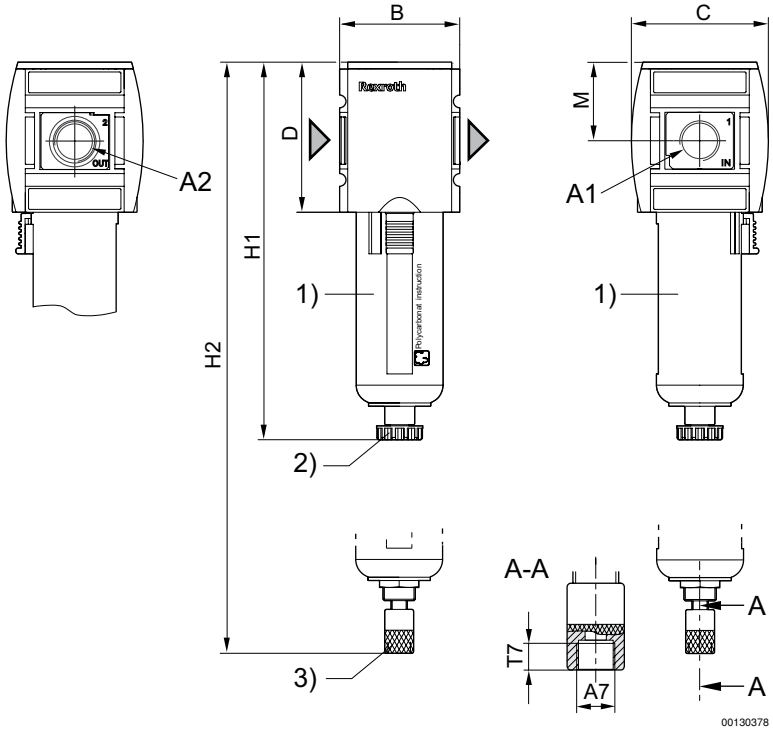

A1 = input
A2 = output
1) Plastic reservoir and protective guard with window
2) Semi-automatic condensate drain
3) Fully automatic condensate drain

Part No.	A1	A2	A7	B	C	D	H1	H2	M	T7		
R412007003	G 3/8	G 3/8	G 1/8	63	74	80	189.5	206	42.5	8.5		
R412007004	G 3/8	G 3/8	G 1/8	63	74	80	189.5	206	42.5	8.5		
R412007005	G 3/8	G 3/8	G 1/8	63	74	80	189.5	206	42.5	8.5		

Part numbers marked in bold are available from the central warehouse in Germany, see the shopping basket for more detailed information

Filter, Series AS3-FLS

► G 3/8 - G 1/2 ► filter porosity: 40 µm ► suitable for ATEX

Part No.	A1	A2	A7	B	C	D	H1	H2	M	T7		
R412007012	G 1/2	G 1/2	G 1/8	63	74	80	189.5	206	42.5	8.5		
R412007013	G 1/2	G 1/2	G 1/8	63	74	80	189.5	206	42.5	8.5		
R412007014	G 1/2	G 1/2	G 1/8	63	74	80	189.5	206	42.5	8.5		