Piston rod cylinders → Short-stroke and compact cylinders

Series KHZ

► Ø 12 - 100 mm ► Ports: M5 - G 1/4 ► double-acting ► cushioning: elastic

Ambient temperature min./max.	-25°C / +80°C
Medium temperature min./max.	-25°C / +80°C
Medium	Compressed air
Max. particle size	50 µm
Oil content of compressed air	0 mg/m³ - 5 mg/m³
Pressure for determining piston forces	6,3 bar

00136213

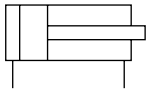

a1

Materials:	
Cylinder tube	Aluminum, anodized
Piston rod	Stainless steel
Piston	Nitrile rubber
Front cover	Aluminum
End cover	Aluminum
Scraper	Polyurethane

Technical Remarks

- The pressure dew point must be at least 15 °C under ambient and medium temperature and may not exceed 3 °C.
- The oil content of air pressure must remain constant during the life cycle.
- Use only the approved oils from Bosch Rexroth, see chapter „Technical information“.

Piston Ø		**[mm]**	**12**	**16**	**20**	**25**	**32**
Retracting piston force		[N]	53	95	148	260	435
Extracting piston force		[N]	71	127	198	309	507
Impact energy		[J]	0.03	0.06	0.08	0.1	0.16
Weight	0 mm stroke	[kg]	0.036	0.063	0.082	0.164	0.195
	+10 mm stroke	[kg]	0.048	0.083	0.108	0.198	0.249
Working pressure min./max.		[bar]	1 - 10	1 - 10	1 - 10	1 - 10	0.6 - 10
Note			1)	1)	1)	1)	2)

Piston Ø		**[mm]**	**40**	**50**	**63**	**80**	**100**
Retracting piston force		[N]	720	1110	1837	2857	4639
Extracting piston force		[N]	792	1237	1964	3167	4948
Impact energy		[J]	0.24	0.32	0.38	0.38	0.5
Weight	0 mm stroke	[kg]	0.285	0.388	0.636	1.222	2.385
	+10 mm stroke	[kg]	0.337	0.458	0.726	1.442	2.631
Working pressure min./max.		[bar]	0.6 - 10	0.6 - 10	0.6 - 10	0.6 - 10	0.6 - 10
Note			2)	2)	2)	2)	2)

1) Material front cover: Brass
2) Material front cover: Aluminum

Piston rod cylinders → Short-stroke and compact cylinders

Series KHZ

► Ø 12 - 100 mm ► Ports: M5 - G 1/4 ► double-acting ► cushioning: elastic

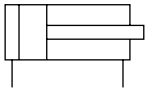

Piston Ø Piston rod thread Ports Piston rod thread - type	12 M5 M5 external thread	16 M5 M5 internal thread	20 M5 M5 internal thread	25 M5 G 1/8 internal thread	32 M6 G 1/8 internal thread
Stroke 5	**0822010500**	**0822010510**	**0822010520**	**0822010530**	**0822010540**
10	**0822010501**	**0822010511**	**0822010521**	**0822010531**	**0822010541**
15	**0822010502**	**0822010512**	**0822010522**	**0822010532**	**0822010542**
20	**0822010503**	**0822010513**	**0822010523**	**0822010533**	**0822010543**
25	**0822010504**	**0822010514**	**0822010524**	**0822010534**	**0822010544**
30	**0822010505**	**0822010515**	**0822010525**	**0822010535**	**0822010545**
40	**0822010506**	**0822010516**	**0822010526**	**0822010536**	**0822010546**
50	-	-	**0822010527**	**0822010537**	**0822010547**
Piston Ø **Piston rod thread** **Ports** **Piston rod thread - type**	**40** **M6** **G 1/8** **internal thread**	**50** **M8** **G 1/8** **internal thread**	**63** **M8** **G 1/8** **internal thread**	**80** **M10** **G 1/4** **internal thread**	**100** **M12** **G 1/4** **internal thread**
Stroke 5	**0822010550**	-	**0822010570**	-	-
10	**0822010551**	**0822010561**	**0822010571**	R402005784	-
15	**0822010552**	**0822010562**	**0822010572**	-	-
20	**0822010553**	**0822010563**	**0822010573**	-	-
25	**0822010554**	**0822010564**	**0822010574**	R402005787	R402005833
30	**0822010555**	**0822010565**	**0822010575**	-	-
40	**0822010556**	**0822010566**	**0822010576**	-	-
50	**0822010557**	**0822010567**	**0822010577**	**R402005790**	R402005836

other versions can be ordered from Bosch Rexroth sales offices

Piston rod cylinders → Short-stroke and compact cylinders

Series KHZ

► Ø 12 - 100 mm ► Ports: M5 - G 1/4 ► double-acting ► cushioning: elastic

Dimensions

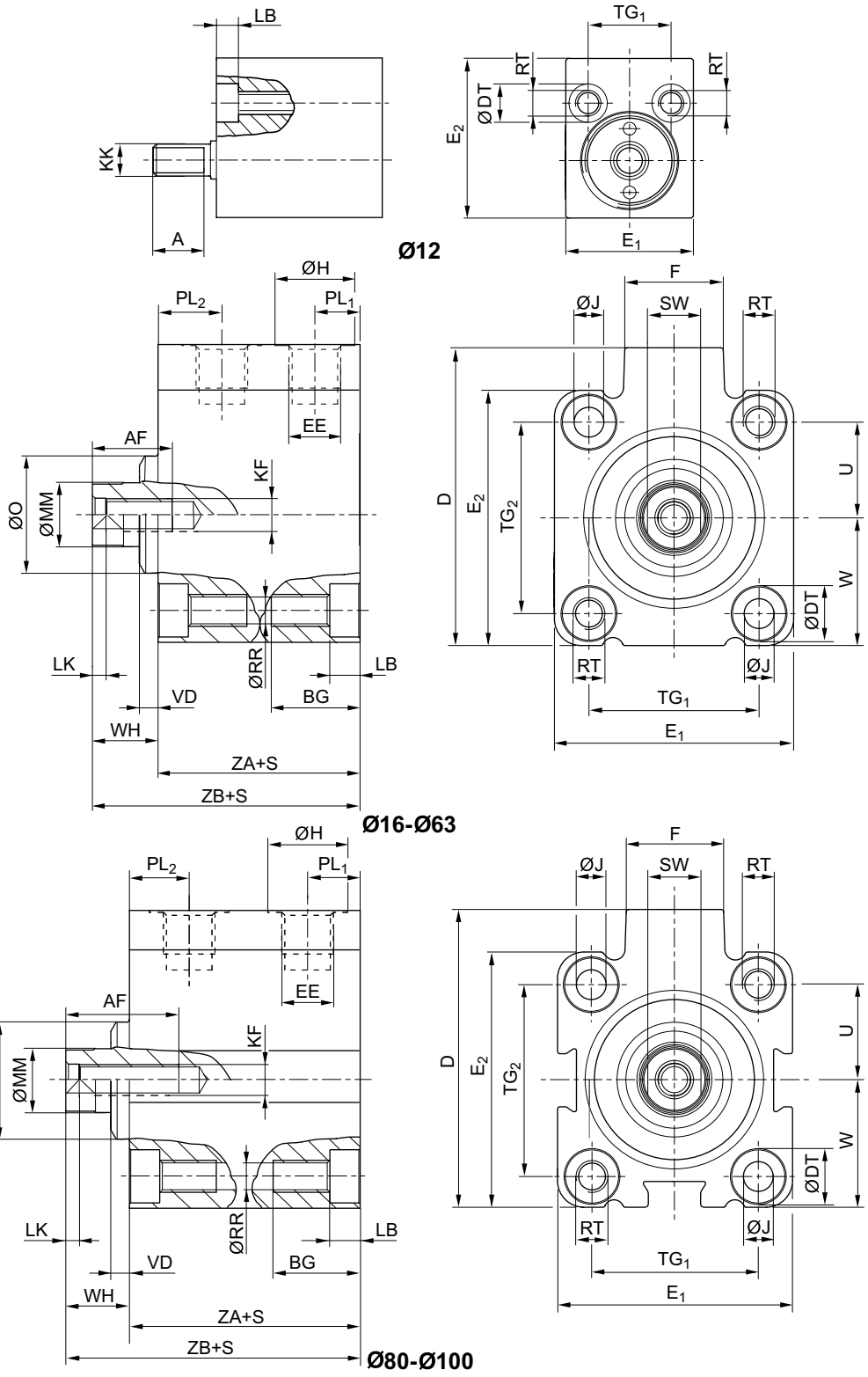

S = stroke

Piston rod cylinders → Short-stroke and compact cylinders

Series KHZ

► Ø 12 - 100 mm ► Ports: M5 - G 1/4 ► double-acting ► cushioning: elastic

Piston Ø	S	A	AF +1	BG [1]	D JS15	ØDT H13	E1 JS15	E2 JS15	EE	F	ØH	ØJ	KF
12	5 - 20	8	–	12.4	–	6	20	25	M 5	–	8	–	–
12	25 - 40	8	–	17.5	–	6	20	25	M 5	–	8	–	–
16	5 - 15	–	10	12.4	33	6	28	28	M 5	11.5	8	3.55	M5
16	20 - 40	–	10	17.5	33	6	28	28	M 5	11.5	8	3.55	M5
16	20 - 40	–	10	17.5	33	6	28	28	M 5	11.5	8	3.55	M 5
20	5 - 50	–	10	13.6	37	7.5	32	32	M 5	11	8	4.55	M5
25	5 - 50	–	10	13.6	47.5	8	37	39	G 1/8	17.5	15	4.55	M5
32	5 - 50	–	15	16.7	56	10	45	48	G 1/8	18.5	15	5.5	M6
40	5 - 50	–	15	16.7	62.5	10	54.5	54.5	G 1/8	18.5	15	5.5	M6
50	10 - 50	–	18	19.8	72	11	64	64	G 1/8	18	15	7.3	M8
63	5 - 50	–	18	25	88	15	80	80	G 1/8	23	15	9.2	M8
80	10 - 50	–	18	25	110	15	100	100	G 1/4	27	19	9.2	M10
100	25 - 50	–	20	30	132	17.5	124	124	G 1/4	28	19	11	M12

Piston Ø	KK	LB +0,4	LK +0,5	ØMM f8	ØO	PL1	PL2	ØRR	RT	SW -0,3	TG1	TG2
12	M 5	3.4	–	6	–	6	9.5	3.3	M4	–	13 ±0,2	–
12	M 5	8.5	–	6	–	6	9.5	3.3	M4	–	13 ±0,2	–
16	–	3.4	2	8	–	6	11.3	3.3	M4	7	20 ±0,2	20 ±0,2
16	–	8.5	2	8	–	6	11.3	3.3	M4	7	20 ±0,2	20 ±0,2
16	–	8.5	2	8	–	6	11.3	3.3	M4	7	20 ±0,2	20 ±0,2
20	–	4.6	2	10	–	5	8	4.2	M5	8	22 ±0,2	22 ±0,2
25	–	4.6	2	10	20	9	11	4.2	M5	8	26 ±0,25	28 ±0,25
32	–	5.7	2.5	12	22	8.5	12	5.05	M6	10	32 ±0,25	36 ±0,25
40	–	5.7	2.5	12	30	9	11	5.05	M6	10	40 ±0,25	40 ±0,25
50	–	6.8	3.5	16	35	8.5	11	6.8	M8	13	50 ±0,25	50 ±0,25
63	–	9	3.5	16	35	8.5	12.5	8.5	M10	13	62 ±0,25	62 ±0,25
80	–	9	4	20	46	13	16	8.8	M10	17	82 ±0,3	82 ±0,3
100	–	11	4	25	56	15.5	15.5	10.2	M12	22	103 ±0,3	103 ±0,3

Piston Ø	U	W	VD -1	WH	ZA ±0,2	ZB ±0,8							
12	9	9 ±0,2	–	–	21	31							
12	9	9 ±0,2	–	–	21	31							
16	10	14 ±0,2	–	6	25	31							
16	10	14 ±0,2	–	6	25	31							
16	10	14 ±0,2	–	6	25	31							
20	11	16 ±0,2	–	9.5	24.5	34							
25	14	19,5 ±0,2	3.5	11.5	31	42.5							
32	18	24 ±0,2	3.5	12.5	33	45.5							
40	20	27,3 ±0,2	4.5	15	33	48							
50	25	32 ±0,2	6	17	32.5	49.5							
63	31	40 ±0,2	6.5	17	35.5	52.5							
80	41	50 ±0,3	8.5	18	42	60							
100	51.5	62 ±0,3	7	20	49.5	69.5							

1) Min.