Piston rod cylinder → Supplementary products

Round cylinder, Series ICS-D1-MP4

► Ø 32 - 63 mm ► double-acting ► with magnetic piston ► cushioning: pneumatically, adjustable ► acid-proof ► with rear end cover bushing ► suitable for use in food processing

00121765

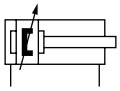

a15

Working pressure min./max.	1 bar / 10 bar
Ambient temperature min./max.	-25°C / +70°C
Medium temperature min./max.	-25°C / +70°C
Medium	Compressed air
Max. particle size	50 µm
Oil content of compressed air	0 mg/m³
Pressure for determining piston forces	6,3 bar

Materials:	
Cylinder tube	Stainless steel, acid-proof
Piston rod	Stainless steel, acid-proof
Front cover	Stainless steel, acid-proof
End cover	Stainless steel, acid-proof
Seal	Acrylonitrile Butadiene Rubber
Nut for piston rod	Stainless steel, acid-proof
Scraper	Polyethylene
Guide bushing	Plastic
Lubricant	ISO 21469 (NSF-H1)

Technical Remarks

- The pressure dew point must be at least 15 °C under ambient and medium temperature and may not exceed 3 °C.
- The oil content of compressed air must remain constant during the life cycle.
- Use only the approved oils from Bosch Rexroth, see chapter „Technical information“.
- Clamping piece for magnetic field sensor necessary

Piston Ø		**[mm]**	**32**	**40**	**50**	**63**
Retracting piston force		[N]	435	665	1039	1766
Extracting piston force		[N]	507	792	1237	1964
Cushioning length		[mm]	11.5	14	17	16
Cushioning energy		[J]	2.4	4.5	7.5	13.5
Weight	0 mm stroke	[kg]	0.6	1.2	1.7	3
	+10 mm stroke	[kg]	0.025	0.036	0.05	0.065
Stroke max.		[mm]	480	600	750	945

Configurable product

This product is configurable. Please use our Internet configurator at www.boschrexroth.com/pneumatics or contact the nearest Bosch Rexroth sales office.

Piston rod cylinder → Supplementary products

Round cylinder, Series ICS-D1-MP4

► Ø 32 - 63 mm ► double-acting ► with magnetic piston ► cushioning: pneumatically, adjustable ► acid-proof ► with rear end cover bushing ► suitable for use in food processing

Rear end cover bushing (ISO 6431), MP4, Piston Ø 32 - 63

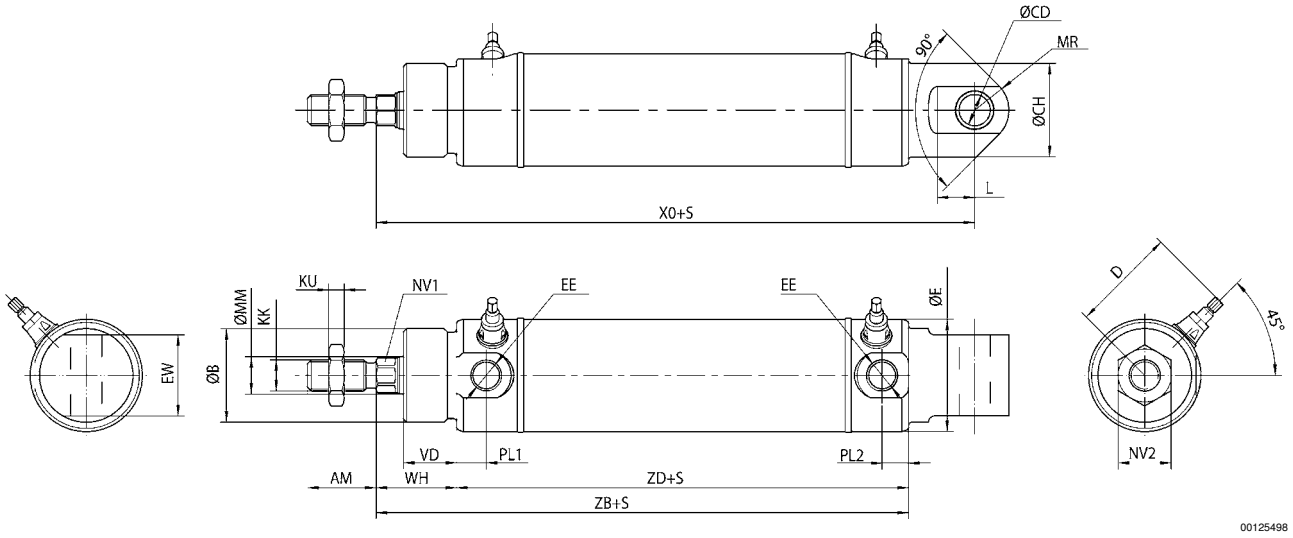

S = stroke, tolerance Ø 32–50 mm = +2/-0, Ø 63 mm = +2.5/-0. The cylinder is supplied with piston rod nuts in accordance with ISO 4035; DIN 439.

Ø	AM	Ø B e11	Ø CD H10	Ø CH	D 1)	Ø E	EE	EW	KK	KU	L 2)	MM g8	MR
32	22	30	10	30	34	36	G 1/8	26	M10x1,25	5	13	12	11
40	24	35	12	33	38	44	G 1/4	28	M12x1,25	6	12	16	13
50	32	40	12	36	50	54	G 1/4	32	M16x1,5	8	13	20	13
63	32	45	16	45	57	68	G 3/8	40	M16x1,5	8	15	20	17

Ø	NV1	NV2	PL1	PL2	VD	WH	XO	ZB	ZD				
32	10	17	9.5	8.5	17	26	142 ±1,3	121	95				
40	13	18	11	11	25	35	160 ±1,3	143	108				
50	17	24	12	12	25	35	170 ±1,3	150	115				
63	17	24	14	13.5	30	40	190 ±1,6	165	125				

1) max.
2) min.