Piston rod cylinder → Supplementary products

Round cylinder, Series ICS-D1-MH1

► Ø 32 - 100 mm ► double-acting ► with magnetic piston ► cushioning: pneumatically, adjustable ► acid-proof ► with mounting holes position front ► suitable for use in food processing

00129054

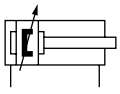

a15

Working pressure min./max.	1 bar / 10 bar
Ambient temperature min./max.	-25°C / +70°C
Medium temperature min./max.	-25°C / +70°C
Medium	Compressed air
Max. particle size	50 µm
Oil content of compressed air	0 mg/m³
Pressure for determining piston forces	6,3 bar

Materials:	
Cylinder tube	Stainless steel, acid-proof
Piston rod	Stainless steel, acid-proof
Front cover	Stainless steel, acid-proof
End cover	Stainless steel, acid-proof
Seal	Acrylonitrile Butadiene Rubber
Nut for piston rod	Stainless steel, acid-proof
Scraper	Polyethylene
Lubricant	ISO 21469 (NSF-H1)

Technical Remarks

- The pressure dew point must be at least 15 °C under ambient and medium temperature and may not exceed 3 °C.
- The oil content of compressed air must remain constant during the life cycle.
- Use only the approved oils from Bosch Rexroth, see chapter „Technical information“.
- Clamping piece for magnetic field sensor necessary

Piston Ø		**[mm]**	**32**	**40**	**50**	**63**	**80**
Retracting piston force		[N]	435	665	1039	1766	2857
Extracting piston force		[N]	507	792	1237	1964	3167
Cushioning length		[mm]	11.5	14	17	16	19
Cushioning energy		[J]	2.4	4.5	7.5	13.5	54
Weight	0 mm stroke	[kg]	0.6	1.2	1.7	3	4
	+10 mm stroke	[kg]	0.025	0.036	0.05	0.065	0.1
Stroke max.		[mm]	480	600	750	945	1200

Piston Ø		**[mm]**	**100**				
Retracting piston force		[N]	4639				
Extracting piston force		[N]	4948				
Cushioning length		[mm]	22				
Cushioning energy		[J]	88				
Weight	0 mm stroke	[kg]	7.7				
	+10 mm stroke	[kg]	0.135				
Stroke max.		[mm]	1500				

Configurable product

This product is configurable. Please use our Internet configurator at www.boschrexroth.com/pneumatics or contact the nearest Bosch Rexroth sales office.

Supplementary products
Part numbers marked in bold are available from the central warehouse in Germany, see the shopping basket for more detailed information
Pneumatics catalog, online PDF, as of 2013-04-30, © Bosch Rexroth AG, subject to change

Piston rod cylinder → Supplementary products

Round cylinder, Series ICS-D1-MH1

► Ø 32 - 100 mm ► double-acting ► with magnetic piston ► cushioning: pneumatically, adjustable ► acid-proof ► with mounting holes position front ► suitable for use in food processing

Threaded holes in front end cover MH1, Piston Ø 32 - 100

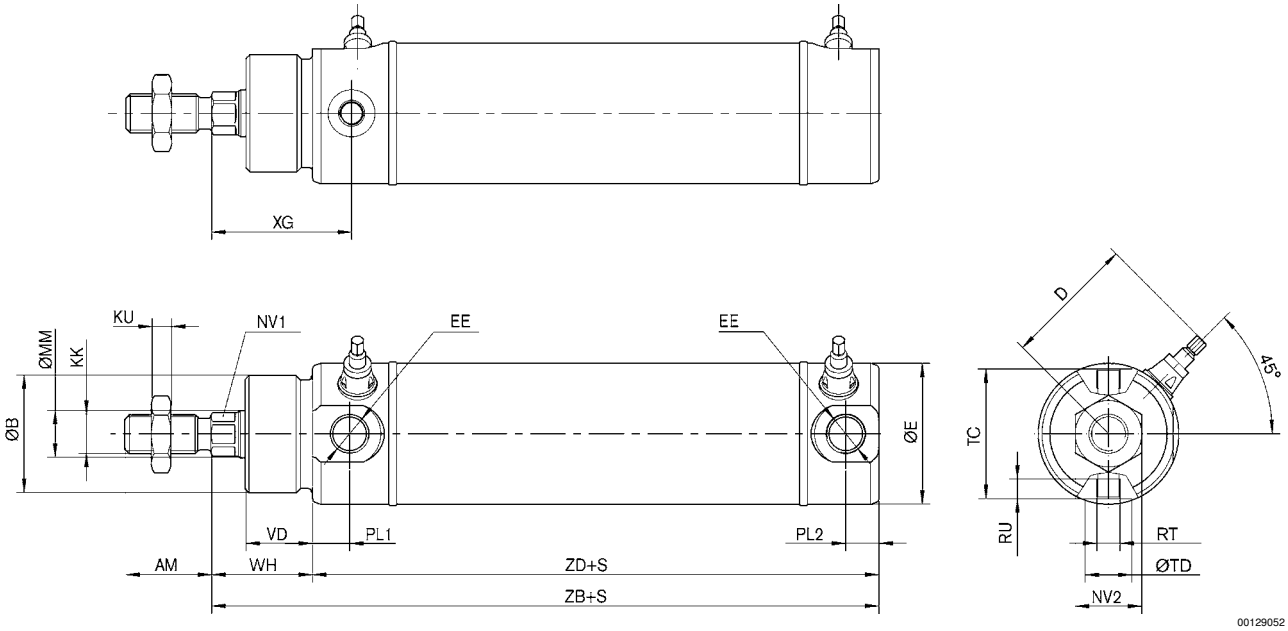

S = stroke, tolerance Ø 32–50 mm = +2/-0, Ø 63–100 mm = +2.5/-0. The cylinder is supplied with piston rod nuts in accordance with ISO 4035; DIN 439.

Ø	AM	Ø B e11	D 1)	Ø E	EE	KK	KU	MM g8	NV1	NV2	PL1	PL2	RT
32	22	30	34	36	G 1/8	M10x1,25	5	12	10	17	9.5	8.5	M6x0,5
40	24	35	38	44	G 1/4	M12x1,25	6	16	13	18	11	11	M6x0,5
50	32	40	50	54	G 1/4	M16x1,5	8	20	17	24	12	12	M8x0,75
63	32	45	57	68	G 3/8	M16x1,5	8	20	17	24	14	13.5	M10x1
80	40	55	70.5	86	G 3/8	M20x1,5	10	25	22	30	14	14	M12x1
100	40	65	80.5	106	G 1/2	M20x1,5	10	25	22	30	20	19	M16x1,5

Ø	RU 2)	TC	Ø TD h9	VD	WH	XG	ZB	ZD					
32	5	33	12	17	26	36	121	95					
40	6	40	12	25	35	47.5	143	108					
50	7.5	49	16	25	35	49.5	150	115					
63	12.5	61	16	30	40	55.5	165	125					
80	16	78	16	30	42	62	184	142					
100	16	100	20	30	42	63	198	156					

1) max.
2) min.