Non-contact transport system, Series NCT-AL

► F = 0.9 - 46 N ► Ø 20 - 100 mm

PNCT_004

Version	Bernoulli principle
Working pressure min./max.	1 bar / 7 bar
Ambient temperature min./max.	+5 °C / +60 °C
Medium	Compressed air
Max. particle size	40 µm
Oil content of compressed air	0 mg/m³
Materials:	
Housing	Aluminum, anodized
Seals	Nitrile rubber
Blanking screw	Brass, nickel-plated

Technical Remarks

- The pressure dew point must be at least 15 °C under ambient and medium temperature and may not exceed 3 °C.
- Notice: This product may only be operated with oil-free, dry compressed air.

	Diameter	Holding force at 5 bar	Air consumption at 5 bar	Port	Weight	Note	Part No.
	[mm]	[N]	[l/min]		[kg]		
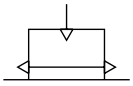	20	0.9	100	M5	0.02	1); 3)	**2650100010**
	30	1.3	100	M5	0.03	1); 3)	**2650100020**
	40	2	110	M5	0.05	1); 3)	**2650100030**
	60	6	210	M5	0.12	1); 3)	**2650100040**
	100	46	228	G 1/8	0.3	2); 4)	**R412010640**

1) Stop: Silicone caoutchouc
2) Stop: Hydrogenated nitrile butadiene rubber
3) Nozzle: Stainless steel
4) Nozzle: Aluminum, anodized

Principle of operation

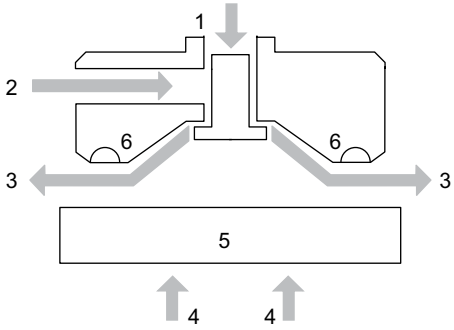

00138451

1) Compressed air connection
2) Alternative compressed air connection
3) Air flow
4) Lifting force
5) Object
6) Stop

Non-contact transport system, Series NCT-AL

► F = 0.9 - 46 N ► Ø 20 - 100 mm

Lifting force F dependent on working pressure p

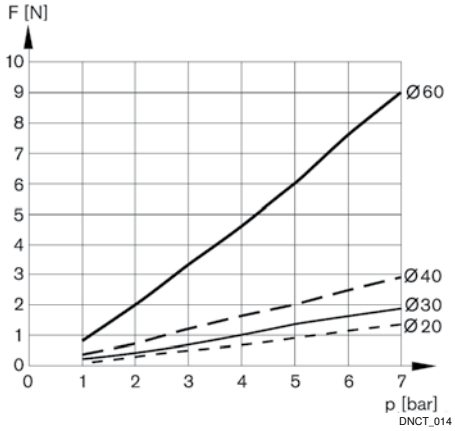

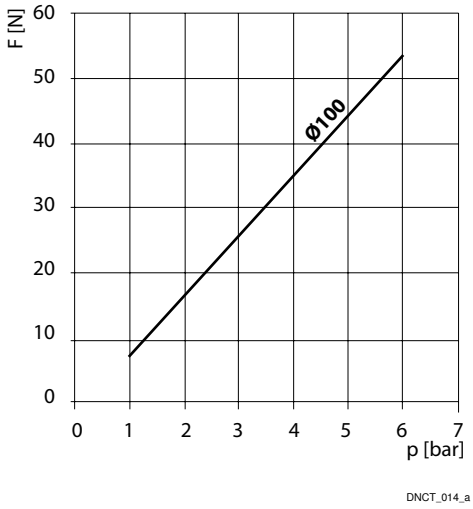

Air consumption Q depending on working pressure p

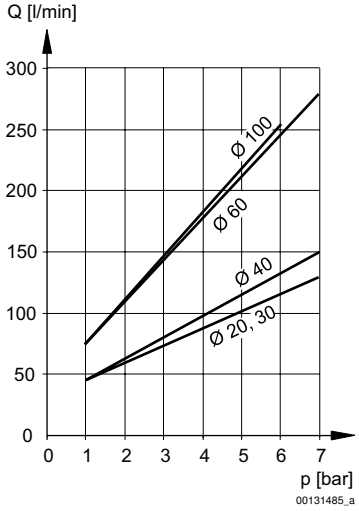

Dimensions, Ø 20

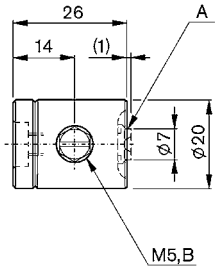

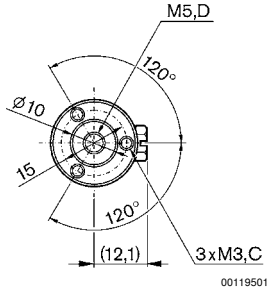

A=stop
B=alternative compressed air connection
C=depth=5mm
D=air connection

Part numbers marked in bold are available from the central warehouse in Germany, see the shopping basket for more detailed information

Non-contact transport system, Series NCT-AL

► F = 0.9 - 46 N ► Ø 20 - 100 mm

Dimensions, Ø 30

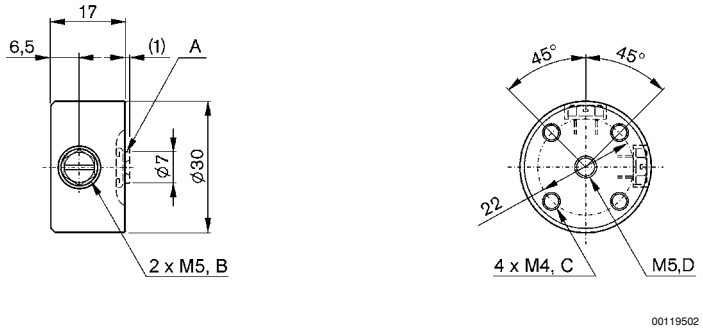

A=stop
B=alternative compressed air connection
C=depth=5mm
D=air connection

Dimensions, Ø 40

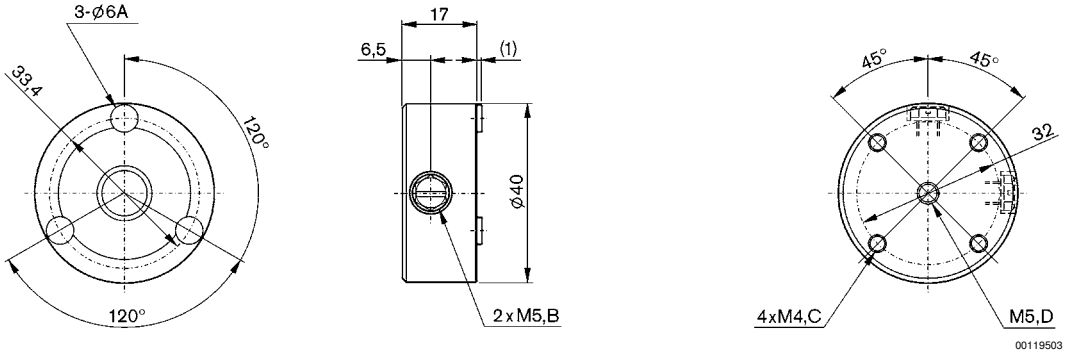

A=stop (can be removed for contactless applications
B=alternative compressed air connections
C=depth=5mm
D=air connection

Dimensions, Ø 60

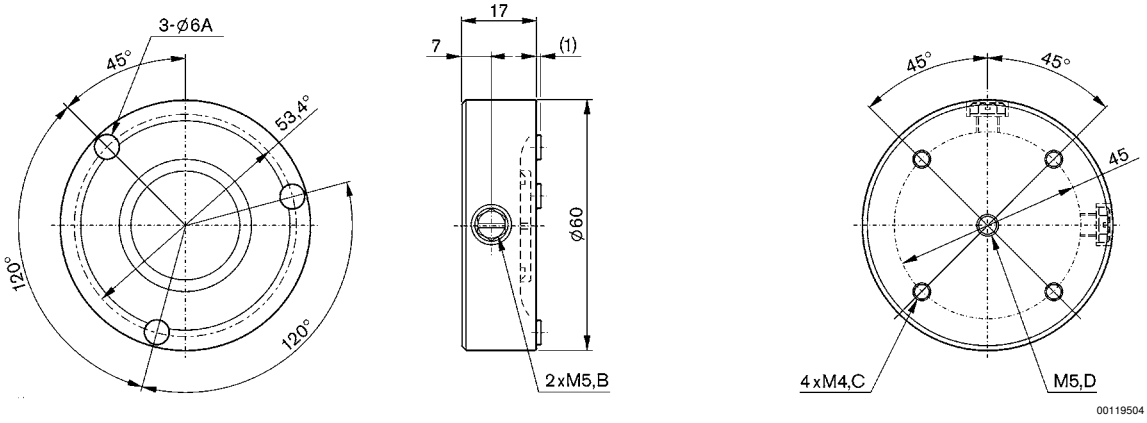

A=stop (can be removed for contactless applications
B=alternative compressed air connections
C=depth=5mm
D=air connection

Non-contact transport system, Series NCT-AL

► F = 0.9 - 46 N ► Ø 20 - 100 mm

Dimensions, Ø 100

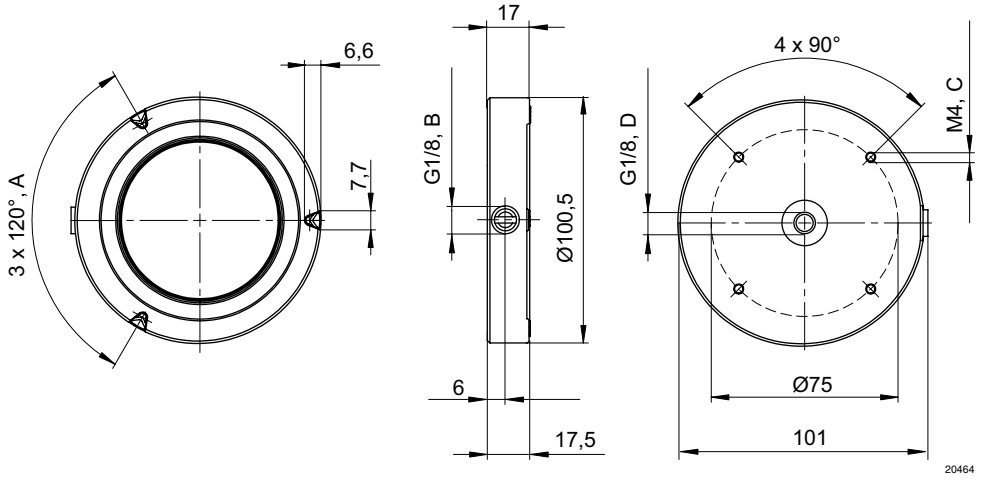

A=stop (can be removed for contactless applications
B=alternative compressed air connections, 6mm
C=Mounting holes position,10mm
D=air connection, 5mm