General mounting instructions

The following notes relating to mounting apply to all ball rail systems. However, different specifications exist with regard to the parallelism of the guide rails and to mounting the ball runner blocks with screws and locating pins. This information is provided separately alongside the descriptions of the individual types of ball rail systems.

⚠ In the case of overhead installation (hanging installation) or vertical installation, the ball runner block can release from the ball guide rail due to the balls being lost or broken. Secure the ball runner block from falling! Danger of death!
We recommend the use of protection against falling loads!

⚠ Rexroth ball rail systems are high-quality products. Particular care must be taken during transportation and subsequent mounting. The same care must be taken with cover strips. All steel parts are protected with anti-corrosion oil.
It is not necessary to remove this oil provided the recommended lubricants are used.

Mounting examples

Ball guide rails
Each guide rail has ground reference surfaces on both sides.

Possibilities for side fixing:
1 Reference edges
2 Clamping strips
3 V-guides

Note
- Guide rails without side fixing have to be aligned straight and parallel when mounting, preferably using a straightedge.
- Recommended limits for side load if no additional lateral retention is provided, see the individual ball runner blocks.

Ball runner block
Each ball runner block has a ground reference edge on one side (see dimension V_1 in the dimension drawings).

Possibilities for additional fixing:
1 Reference edges
2 Clamping strips
4 Pinning

Installation with fixing of both ball guide rails and both ball runner blocks

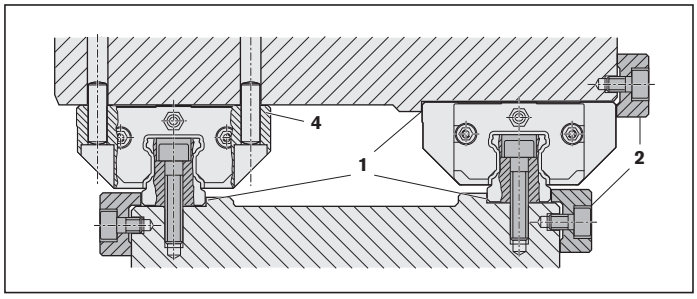

Installation with fixing of one ball guide rail and one ball runner block

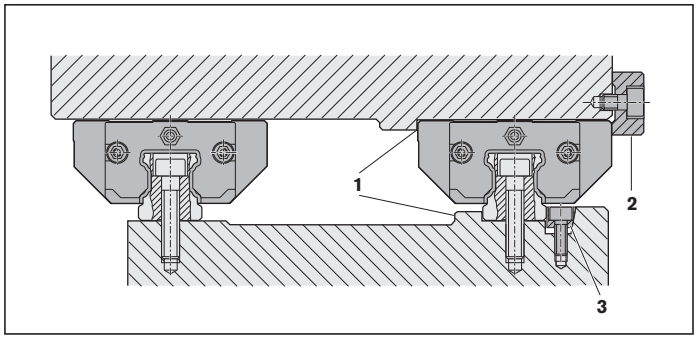

Notes
- Before installing the components, clean and degrease all mounting surfaces.
- Please ask for the “Mounting Instructions for Ball Rail Systems”.
- After mounting, it should be possible to move the ball runner block easily.

General mounting instructions

Maximum forces and moments of profiled guide rails according to ISO 12090-1 (DIN 637)

The maximum load on a profiled guide rail is defined not only by the static load-bearing capacity C_0 in accordance with ISO 14728 Part 2 and the static moments M_{t0} from the rolling contact, but also by the screw connections. As a rule, runner blocks are fastened using 4 or 6 screws. Guide rails have a regularly spaced single-row threaded connection. If the runner block is positioned exactly over a rail screw, this screw will absorb the largest portion of the load. For this reason, the load-bearing capacity is primarily dependent on the length of the runner block, the rail hole spacing, the screw size and the width of the rail contact surface. Slipping or mismatches on exceeding a maximum load limit is primarily defined by the screw fastening of the rail.
The table shows the permissible static tensile forces and moments around the guide axis for profiled rail systems in various versions for screw tightening torques with strength class 8.8.

Illustration of static pull forces and moments

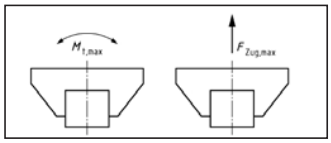

Fig. 1

Standard ball rail systems						
Ball runner block						
Size	**Short**		**Standard length**		**Long**	
	F_{max} (N)	**$M_{t\,max}$ (Nm)**	**F_{max} (N)**	**$M_{t\,max}$ (Nm)**	**F_{max} (N)**	**$M_{t\,max}$ (Nm)**
15	3200	22	3700	26	4200	30
20	5500	51	6400	60	7300	68
25	8100	87	9400	100	10800	120
30	15900	210	18500	240	21100	280
35	15800	250	18500	300	21100	340
45	39300	830	45900	970	52400	1100
55	54600	1400	63700	1600	72800	1800
65	75600	2200	88200	2600	100800	3000

Wide ball rail systems		
Ball runner block		
Size	**Standard length**	
	F_{max} (N)	**$M_{t\,max}$ (Nm)**
20/40	8460	140
25/70	20100	530
35/90	38900	1430

⚠ With dynamic stress, the forces and moments according to the table should be devaluated by at least 35 % as a guideline value. If necessary, you must consider the forces and moments (in derogation from Figure 1).

Maximum static side load without stop strips for strength class 8.8 (as per DIN 637)

For safe structural design the application includes the usage of stop strips on runner block and rail. If stop strips are not used on the runner block or the rail, then if a load is applied in the transverse direction the guide may slip as soon as the side loads in the table are exceeded. The stated maximum side loads apply for screw strength class 8.8 and an adjoining structure made of steel or cast iron.

Standard ball rail systems			
Ball runner block			
Size	**Short**	**Standard length**	**Long**
	F_{max} (N)	**F_{max} (N)**	**F_{max} (N)**
15	240	280	320
20	410	480	550
25	610	710	810
30	1200	1400	1600
35	1200	1400	1600
45	3000	3400	3900
55	4100	4800	5500
65	5700	6600	7600

Bolted connections tightening torques for profiled guide rails with strength class 8.8 (according to DIN 637)

Size	**FNS R1651, FLS R1653, FKS R1665, FKN R1663**				**SNS R1622, SLS R1623, SNH R1621, SLH R1624, SKS R1666, SKN R1664**		**Rail**	
	mounted from above		**mounted from below**		**mounted from above**		**mounted from above**	
		M_A (Nm)		**M_A (Nm)**		**M_A (Nm)**		**M_A (Nm)**
15	M5	6	M4	3	M4	3	M4	3
20	M6	10	M5	6	M5	6	M5	6
25	M8	25	M6	10	M6	10	M6	10
30	M10	49	M8	24	M8	25	M8	24
35	M10	49	M8	24	M8	25	M8	24
45	M12	83	M10	48	M10	49	M12	83
55	M14	130	M12	81	M12	83	M14	130
65	M16	200	M14	130	M16	200	M16	200

Mounting

Reference edges, corner radii

Examples of combinations
The combinations shown here are examples. Basically, any ball runner block may be combined with any of the ball guide rail types offered.

Fastening screws
⚠ In the case of high screw stress, always check the safety of the screws.

For more information on this topic, see the "General mounting instructions" section.

Guide rail with normal and long runner blocks

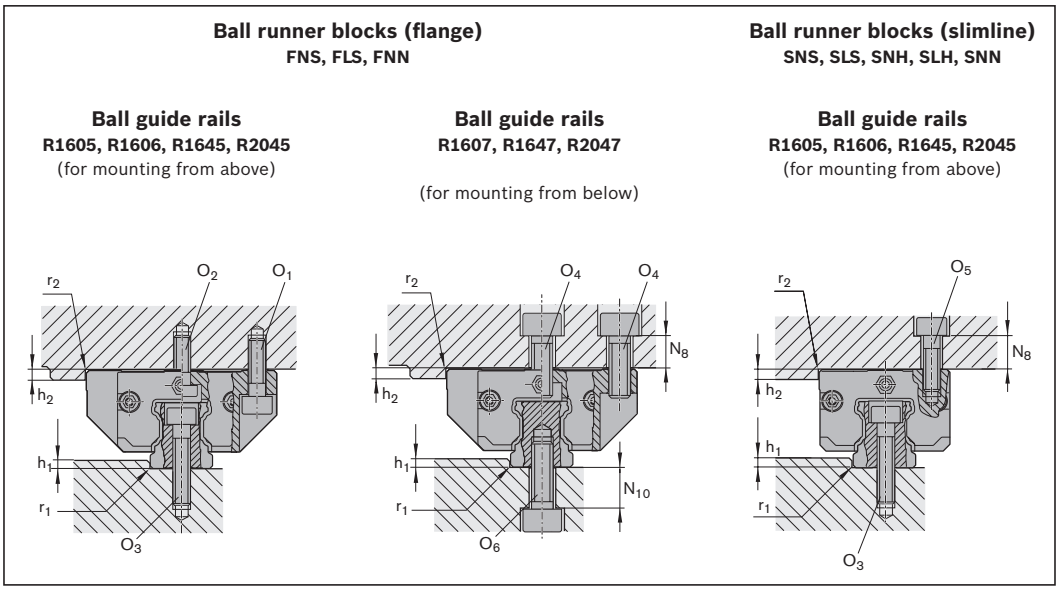

Size	Dimensions (mm)						
	$h_{1\,min}$	$h_{1\,max}$ 1)	h_2	N_8	N_{10}	$r_{1\,max}$	$r_{2\,max}$
15	2.5	3.5	4	6	7.0	0.4	0.6
20	2.5	4.0	5	9 10 3)	9.5 –	0.6	0.6
25	3.0	5.0	5	10 11 3)	12.0 –	0.8	0.8
30	3.0	5.0	6	10	9.0	0.8	0.8
35	3.5	6.0	6	13	13	0.8	0.8
45	4.5	8.0	8	14	13	0.8	0.8
55	7.0	10.0	10	20	23	1.2	1.0
65	7.0	10.0	14	22	26	1.2	1.0

1) If using clamping and braking elements, pay attention to H1 values.

Size	Screw sizes					
	Ball runner block				Ball guide rail	
	O_1 ISO 4762 4 pieces	O_2 2) DIN 6912 2 pieces	O_4 1) 2) ISO 4762 6 pieces	O_5 ISO 4762 4 pieces	O_3 ISO 4762	O_6 ISO 4762
15	M4x12	M4x10	M5x12	M4x12	M4x20	M5x12
20	M5x16	M5x12	M6x16	M5x16	M5x25	M6x16
25	M6x20	M6x16	M8x20	M6x18	M6x30	M6x20
30	M8x25	M8x16	M10x20	M8x20	M8x30	M8x20
35	M8x25	M8x20	M10x25	M8x25	M8x35	M8x25
45	M10x30	M10x25	M12x30	M10x30	M12x45	M12x30
55	M12x40	M12x30	M14x40	M12x35	M14x50	M14x40
65	M14x45	M14x35	M16x45	M16x40	M16x60	M16x45

1) When fastening the ball runner block from above with only four screws O_4:
Permissible lateral force 1/3 lower and rigidity less
2) When fastening the ball runner block with six screws:
Tighten the center screws to tightening torque M_A of strength class 8.8
3) SNN ball runner block

Locating pins

⚠ If the guideline values for the permissible lateral force are exceeded (see the corresponding ball runner blocks), you must fix them additionally by pinning.

For the recommended dimensions for pin holes, refer to the dimension drawing and the dimensions.

Possible pin types

- Taper pin (hardened) or
- Straight pin ISO 8734

Note

- At the recommended positions for pin holes, there may be pre-drilled holes in the middle of the ball runner block due to production-related issues (Ø < S_{10}). They are suitable for drilling out.
- If is necessary to carry out pinning at a different position (e.g. the middle lube port), dimension E_2 must not be exceeded in the longitudinal direction (for dimension E_2, refer to the dimension tables of the corresponding ball runner blocks).
  Comply with dimensions E_1 and E_4!
- Do not finish the pin holes until after installation.
- Please ask for the “Mounting Instructions for Ball Rail Systems”.

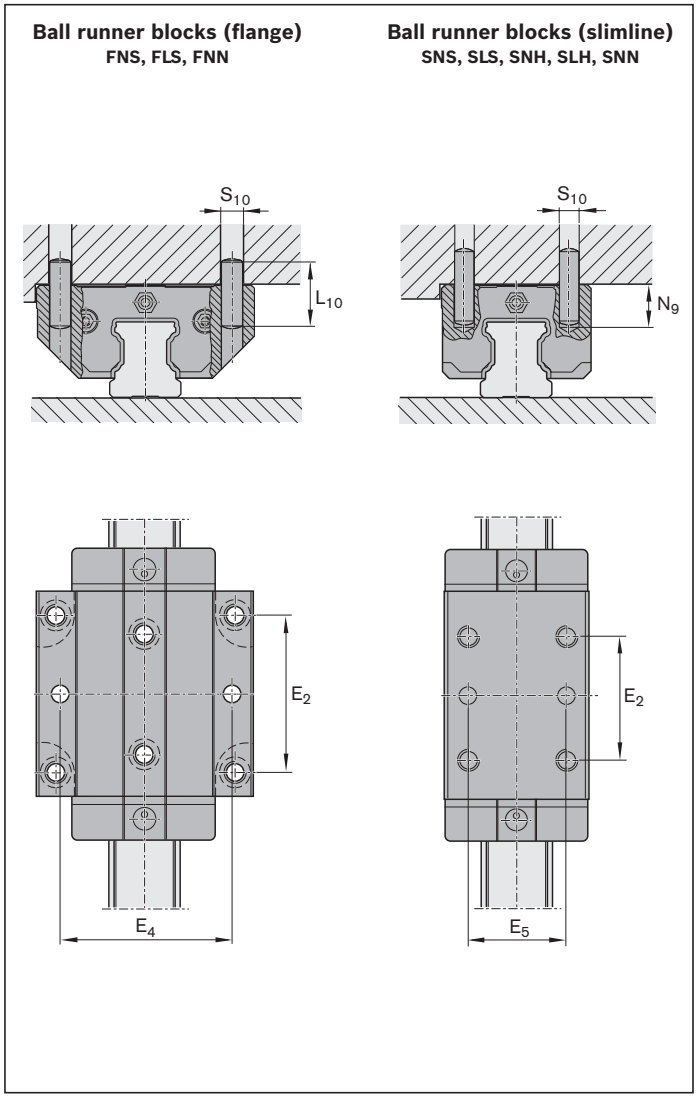

Size	Dimensions (mm)				
	E_4	E_5	L_{10} 1)	$N_{9\,max}$	S_{10} 1)
15	38	26	18	6.0	4
20	53 49 2)	32	24	7.5 6.5 2)	5
25	55 60 2)	35	32	9.0 7.0 2)	6
30	70	40	36	12.0	8
35	80	50	40	13.0	8
45	98	60	50	18.0	10
55	114	75	60	19.0	12
65	140	76	60	22.0	14

1) Taper pin (hardened) or straight pin (ISO 8734)
2) Ball runner block FNN and SNN

Mounting

Reference edges, corner radii

Examples of combinations

The combinations shown here are examples. Basically, any ball runner block may be combined with any of the ball guide rail types offered.

Bolting the ball runner blocks with two screws is completely adequate up to the maximum load.
(Refer to the corresponding ball runner blocks for the maximum load capacity and load moments).

Fastening screws

⚠ In the case of high screw stress, always check the safety of the screws.

For more information on this topic, see the “General mounting instructions” section.

Guide rail with short and super runner blocks

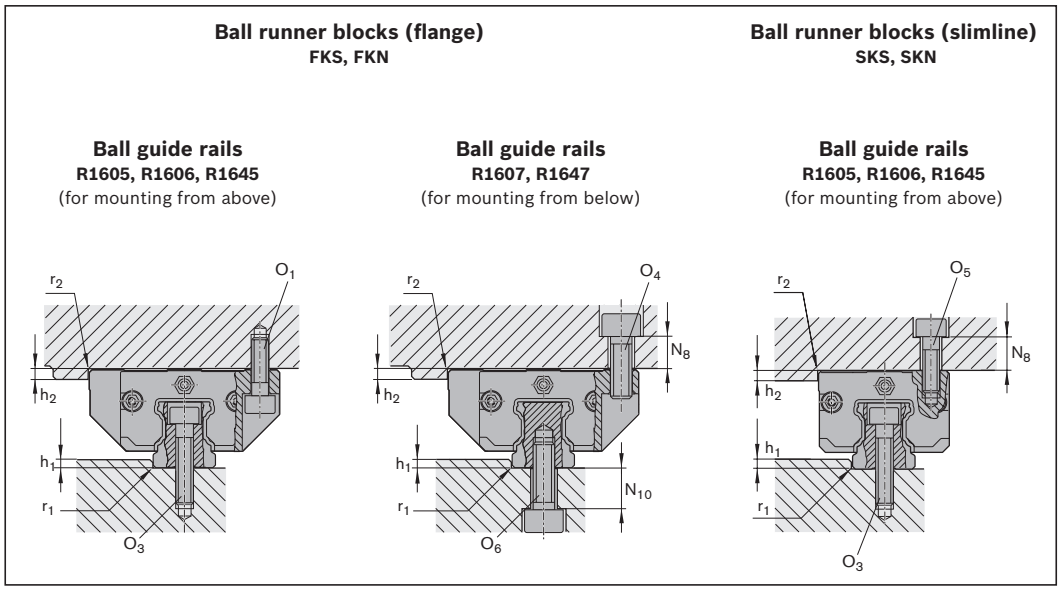

Size	Dimensions (mm)						
	$h_{1\,min}$	$h_{1\,max}$ 1)	h_2	N_8	N_{10}	$r_{1\,max}$	$r_{2\,max}$
15	2.5	3.5	4	6	7.0	0.4	0.6
20	2.5	4.0	5	9	9.5	0.6	0.6
				10 2)	–		
25	3.0	5.0	5	10	12.0	0.8	0.8
				11 2)	–		
30	3.0	5.0	6	10	9.0	0.8	0.8
35	3.5	6.0	6	13	13.0	0.8	0.8

1) If using clamping and braking elements, pay attention to H1 values.
2) SKN ball runner block

Size	Screw sizes				
	Ball runner block			Ball guide rail	
	O_1 ISO 4762 2 pieces	O_4 ISO 4762 2 pieces	O_5 ISO 4762 2 pieces	O_3 ISO 4762	O_6 ISO 4762
15	M4x12	M5x12	M4x12	M4x20	M5x12
20	M5x16	M6x16	M5x16	M5x25	M6x16
25	M6x20	M8x20	M6x18	M6x30	M6x20
30	M8x25	M10x20	M8x20	M8x30	M8x20
35	M8x25	M10x25	M8x25	M8x35	M8x25

Locating pins

⚠ If the guideline values for the permissible lateral force are exceeded (see the corresponding ball runner blocks), you must fix them additionally by pinning.

For the recommended dimensions for pin holes, refer to the dimension drawing and the dimensions.

Possible pin types

- Taper pin (hardened) or
- Straight pin ISO 8734

Note

- At the recommended positions for pin holes, there may be pre-drilled holes in the middle of the ball runner block due to production-related issues (Ø < S_{10}).
  They are suitable for drilling out.
  Comply with dimensions E_4 and E_5!
- Only prepare the pin holes after the installation is complete.
  Please ask for the “Mounting Instructions for Ball Rail Systems”.

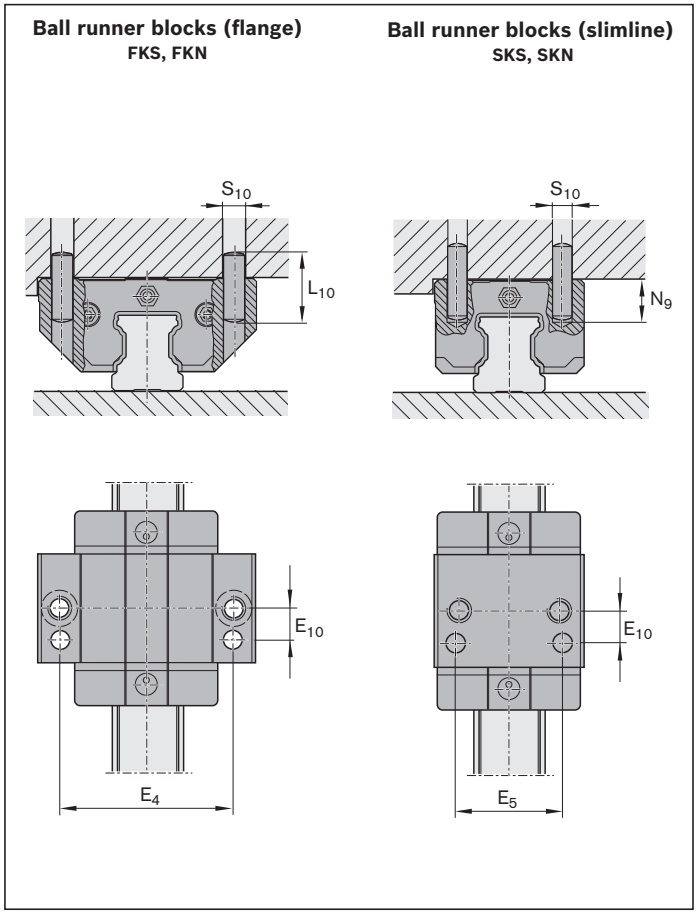

Size	Dimensions (mm)					
	E_4	E_5	E_{10}	L_{10} 1)	$N_{9\,max}$	S_{10} 1)
15	38	26	9	18	3.0	4
20	53 49 2)	32	10	24	3.5 2.0 2)	5
25	55 60 2)	35	11	32	7.0 5.0 2)	6
30	70	40	14	36	10.0	8
35	80	50	15	40	12.0	8

1) Taper pin (hardened) or straight pin (ISO 8734)
2) Ball runner block FKN and SKN

Permitted alignment error for Super ball runner blocks

at the guide rail and at the ball runner block

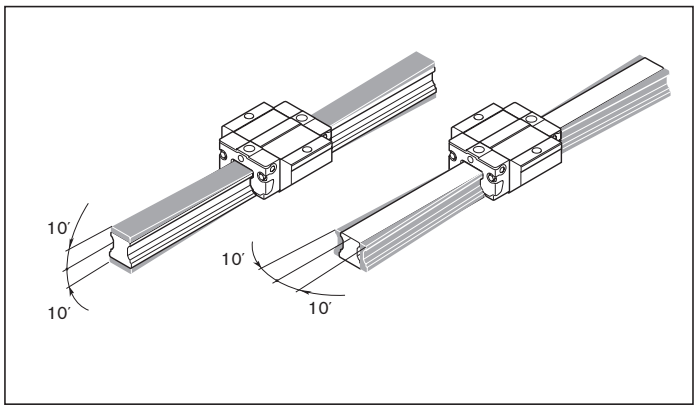

Mounting

Reference edges, corner radii, screw sizes

Examples of combinations

The combinations shown here are examples. Basically, any ball runner block may be combined with any of the ball guide rail types offered.

Fastening screws

⚠ In the case of high screw stress, always check the safety of the screws.

For more information on this topic, see the “General mounting instructions” section.

Guide rail with wide runner block

Ball runner blocks (flange) BNS

Ball guide rails
R1673, R1675, R1676
(for mounting from above)

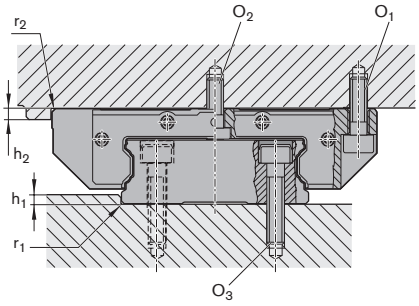

Ball guide rails
R1677
(for mounting from below)

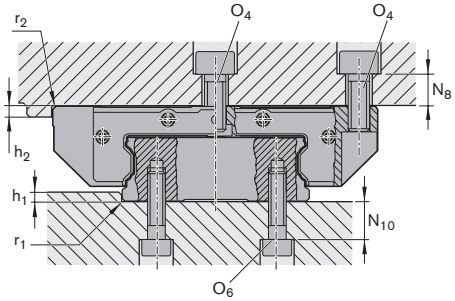

Ball runner blocks (compact) CNS

Ball guide rails
R1673, R1675, R1676
(for mounting from above)

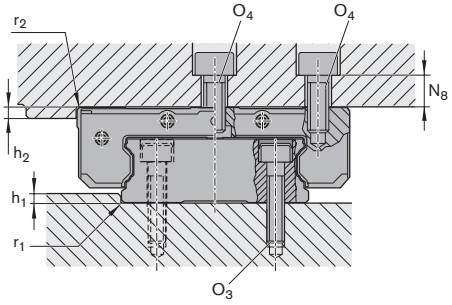

Size	Dimensions (mm)							
	$h_{1\,min}$	$h_{1\,max}$ 1)	h_2	N_8	N_8 2)	N_{10}	$r_{1\,max}$	$r_{2\,max}$
20/40	2.0	2.5	4	9.5	11	5.5	0.5	0.5
25/70	3.0	4.5	5	10.0	13	9.0	0.8	0.8
35/90	3.5	6.0	6	13.0	–	11.0	0.8	0.8

Size	Screw sizes				
	Ball runner block			Ball guide rail	
	O_1 ISO 4762 4 pieces	O_2 3) DIN 6912 2 pieces	O_4 3) ISO 4762 6 pieces	O_3 ISO 4762	O_6 ISO 4762
20/40	M5x16	M5x12	M6x16	M4x20	M5x12
25/70	M6x20	M6x16	M8x20	M6x30	M6x20
35/90	M8x25	M8x20	M10x25	M8x35	M8x25

1) If using clamping and braking elements, pay attention to H1 values.
2) CNS ball runner block
3) When fastening the ball runner block with six screws:
Tighten the center screws to tightening torque M_A of strength class 8.8.
Always use middle fastening screws; otherwise there is a risk.

Locating pins

⚠ If the guideline values for the permissible lateral force are exceeded (see the corresponding ball runner blocks), you must fix them additionally by pinning.

For the recommended dimensions for pin holes, refer to the dimension drawing and the dimensions.

Possible pin types

- Taper pin (hardened) or
- DIN ISO 8734 straight pin

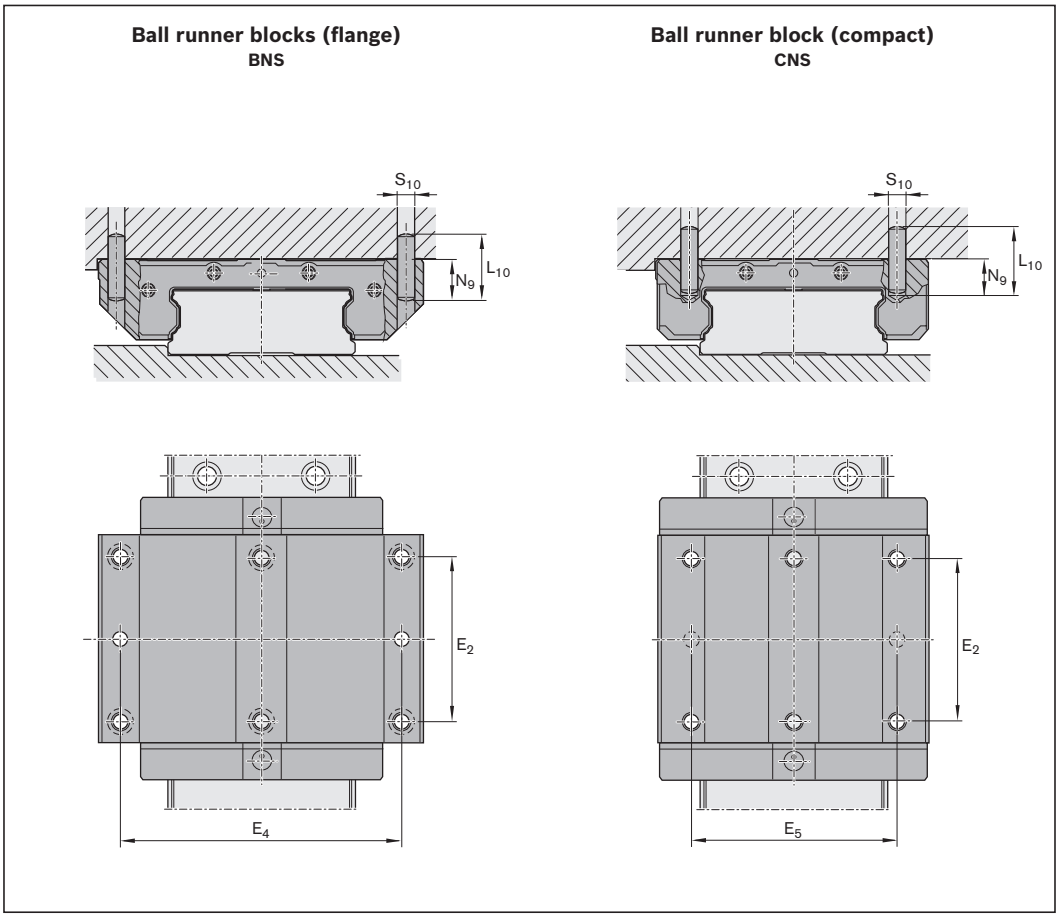

Size	Dimensions (mm)				
	E_4	E_5	L_{10} 1)	$N_{9\ max}$	S_{10} 1)
20/40	70	46	24	7	5
25/70	107	76	32	8	6
35/90	144	–	32	8	8

1) Taper pin (hardened) or straight pin (ISO 8734)

Note

- At the recommended positions for pin holes, there may be pre-drilled holes in the middle of the ball runner block due to production-related issues (Ø < S_{10}). They are suitable for drilling out.
- If is necessary to carry out pinning at a different position (e.g. the middle lube port), dimension E_2 must not be exceeded in the longitudinal direction (for dimension E_2, refer to the dimension tables of the corresponding ball runner blocks). Comply with dimensions E_4 and E_5!
- Only prepare the pin holes after the installation is complete.
- Please ask for the “Mounting Instructions for Ball Rail Systems”.

Installation tolerances

Vertical offset

If you comply with the permissible vertical offset S_1 and S_2, the effect on the service life is, in general, negligible.

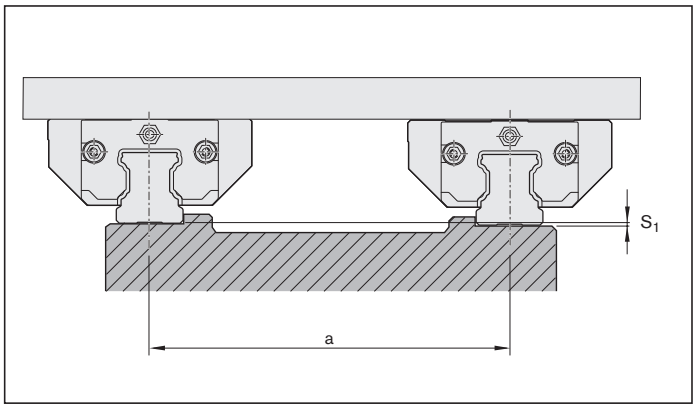

Permissible vertical offset in the transverse direction S_1
You must deduct from the permissible vertical offset S_1 of the ball guide rails the tolerance for dimension H according to the table containing the accuracy classes in the “General product description” chapter.

Ball runner block	Calculation factor Y for preload class			
	C0	C1	C2	C3
Steel	$4.3 \cdot 10^{-4}$	$2.8 \cdot 10^{-4}$	$1.7 \cdot 10^{-4}$	$1.2 \cdot 10^{-4}$
Short made of steel	$5.2 \cdot 10^{-4}$	$3.4 \cdot 10^{-4}$	–	–
Super ball runner blocks	$8.0 \cdot 10^{-4}$	$6.0 \cdot 10^{-4}$	–	–
Aluminum	$7.0 \cdot 10^{-4}$	$5.0 \cdot 10^{-4}$	–	–

$$S_1 = a \cdot Y$$

Key
S_1 = Permissible vertical offset of the ball guide rails (mm)
a = distance between guide rails (mm)
Y = calculation factor, transverse direction (–)

Preload classes
C0 = Without preload (clearance)
C1 = Moderate preload
C2 = Average preload
C3 = High preload

Permissible vertical offset in the longitudinal direction S_2
You must deduct from the permissible vertical offset S_2 of the ball runner blocks the “Max. difference of dimension H on one rail” tolerance according to the table containing the accuracy classes in the “General product description” chapter. You must deduct from the permissible vertical offset S_2 of the ball runner blocks the “Max. difference of dimension H on one rail” tolerance according to the table containing the accuracy classes in the “General product description” chapter.

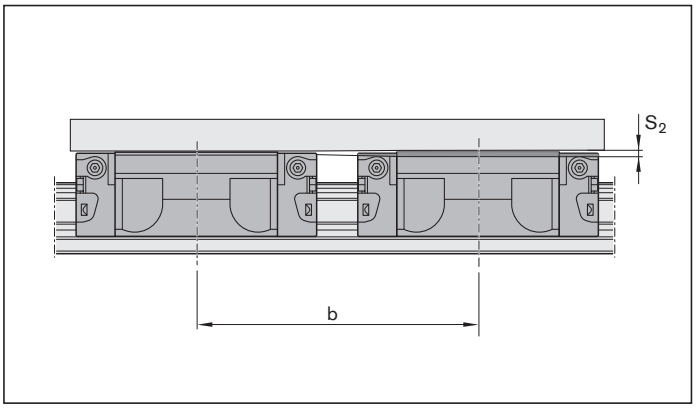

Ball runner block	Calculation factor X for preload class		
	Short	Normal	Long
Steel	$6.0 \cdot 10^{-5}$	$4.3 \cdot 10^{-5}$	$3.0 \cdot 10^{-5}$
Aluminum	–	$6.0 \cdot 10^{-5}$	–

$$S_2 = b \cdot X$$

Key
S_2 = Permissible vertical offset of the ball runner blocks (mm)
b = distance between runner blocks (mm)
X = calculation factor, longitudinal direction (–)

Permissible deviation from straightness in the longitudinal direction with two consecutive Super ball runner blocks

The ball runner blocks can automatically compensate unevenness of 10' in the longitudinal direction.

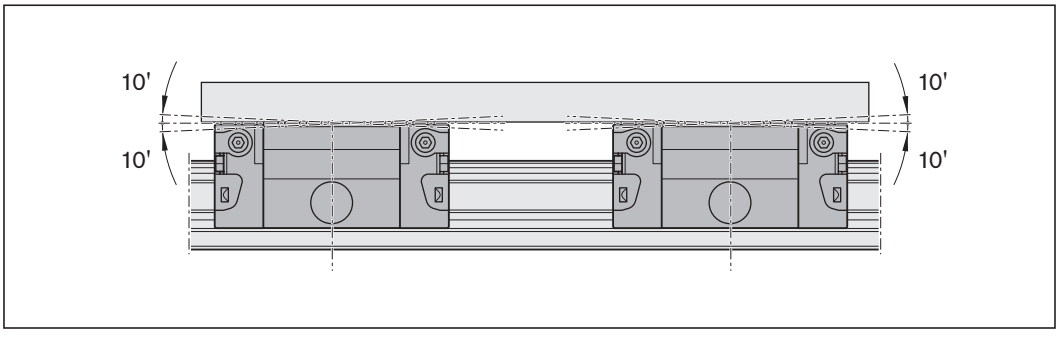

Installation tolerances

General notes

The following notes on mounting apply to all ball rail systems.
Rexroth ball rail systems are high-grade quality products.
Particular care must be taken during transportation and subsequent mounting. The same care must be taken with cover strips.
All steel parts are protected with anti-corrosion oil.
It is not necessary to remove this oil provided the recommended lubricants are used.

⚠ In the case of overhead installation (hanging installation), the ball runner block can release from the guide rail due to the balls being lost or broken. Secure the ball runner block from falling!

Parallelism of the rails after mounting

Values measured on the ball guide rails and the ball runner blocks

The values for the parallelism offset P1 apply to the entire standard range of ball runner blocks.
The parallelism offset $\mathbf{P_1}$ raises the preload slightly on one side. If you comply with the table values, the effect on the service life is, in general, negligible.

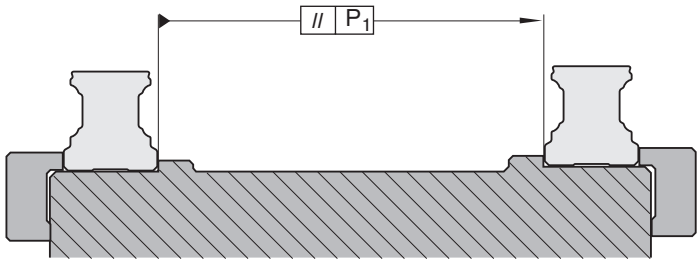

Ball runner block	Size	Parallelism offset P_1 (mm) with preload class			
		C0	C1	C2	C3
Steel ball runner blocks with precision installation[1)]	**15**	0.015	0.009	0.005	0.004
	20	0.018	0.011	0.006	0.004
	25	0.019	0.012	0.007	0.005
	30	0.021	0.014	0.009	0.006
	35	0.023	0.015	0.010	0.007
	45	0.028	0.019	0.012	0.009
	55	0.035	0.025	0.016	0.011
	65	0.048	0.035	0.022	0.016
Steel ball runner blocks, short	**15**	0.018	0.011	–	–
	20	0.022	0.013	–	–
	25	0.023	0.014	–	–
	30	0.025	0.017	–	–
	35	0.028	0.018	–	–
Super ball runner blocks	**15**	0.025	0.017	–	–
	20	0.029	0.021	–	–
	25	0.032	0.023	–	–
	30	0.035	0.026	–	–
	35	0.040	0.030	–	–
Aluminum ball runner blocks	**15**	0.021	0.014	–	–
	25	0.026	0.017	–	–
	30	0.029	0.019	–	–
	35	0.035	0.022	–	–

Preload classes
C0 = Without preload (clearance)
C1 = Moderate preload
C2 = Average preload
C3 = High preload

1) The precision installation unit is a rigid, high-precision surrounding structure.
With standard installation, the surrounding structure is of flexible design and it is possible to work with **double** the tolerance values of the parallelism offset.

Composite ball guide rails

Notes on guide rails

- Matching sections of a composite guide rail are identified as such by a label on the packaging. All sections of the same rail have the same serial rail number.
- The numbering is marked on the top of the guide rail.

Guide rail made up of two sections

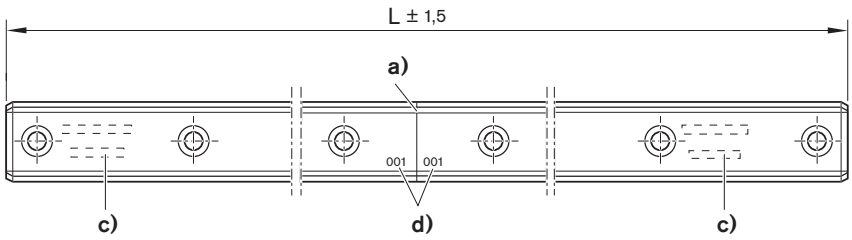

Guide rail made up of three or more sections

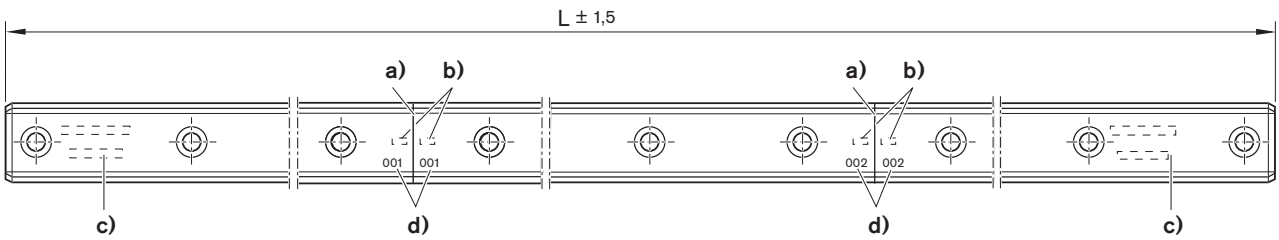

L = Rail length (mm)
n_B = Number of holes (–)

a) Joint
b) Serial rail number
c) Full rail identification code on first and last sections
d) Joint number

Note on cover strip

- For composite rails, a one-piece cover strip to cover the total length L is supplied separately.
- Secure the cover strip!

Note on the adjoining structure

Permissible hole position tolerances of the mounting holes for the adjoining structure

Size	Hole position tolerance (mm)
15 – 35	Ø 0.2
45 – 65	Ø 0.3