Transportation control

The transportation control components are used to control the flow of workpiece pallets in the transfer system. The direction of travel of the workpiece pallet is decisive for proper function of the transportation control.
Transportation control includes:

- Stopping and separating workpiece pallets in the longitudinal conveyor ☞🗎 9-7, 9-8, 9-9
- Stopping workpiece pallets in the transverse conveyor. It is not possible to separate workpiece pallets in the transverse conveyor ☞🗎 9-7, 9-8, 9-9
- Querying the position of a workpiece pallet. A suitable clamping head for the proximity switch is required for this ☞🗎 9-10
- Controlling operation sequences
- Operation sequence diagrams ☞🗎 13-44 ff.

Stop gates

VE 5/… stop gates are used to separate (only possible in longitudinal conveyors) and stop workpiece pallets, e.g. in an automated station.
They are pneumatically operated. If no pressure is applied, the stop gate is moved into the locked position via a spring, thus substantially improving production reliability. Stop gates are available with and without shock absorbers.

Position of stop gate, switch bracket, and ID systems on workpiece pallet (in longitudinal conveyor)

Stopping the workpiece pallet at the **front** of the longitudinal conveyor

Reference points for assembly (in the transport direction):

- Front edge of the bearing pedestal of a roller (1)
- Front edge of the support profile of the stop gate (2)
- Center axes of the
  - Proximity switch in the SH 2/UH
  - ID40/SLK-... read/write head
  - ID 200/A-... antenna
  - VE 5/... stop gate

Note:
The proximity switch and ID 40 and ID 200…-LF identification systems use the same frequency range. Maintain a minimum distance of 200 mm to prevent interference.

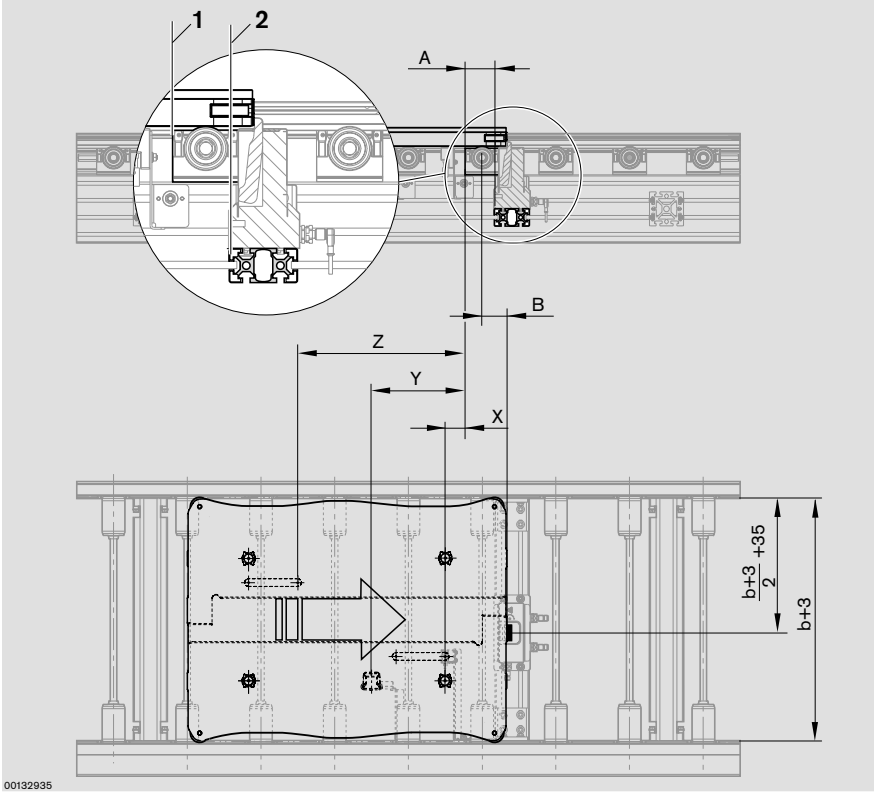

			SH 2/U-H		ID 40	ID 200	VE 5/200, VE 5/D-300		VE 5/D-1000	
b_{WT}	l_{WT}	p	X	Z	Y	Y	A	B	A	B
(mm)	(mm)	(mm)	(mm)	(mm)	(mm)	(mm)	(mm)	(mm)	(mm)	(mm)
455	455	130	85	117.5	150	150	46.5	32.5	43	32.5
455	650	130	(52.5)[1]	247.5	122	122	79	65	75.5	65
455	650	195	(52.5)[1]	247.5	113	113	79	65	75.5	65
650	650	130	(52.5)[1]	247.5	117.5	117.5	79	65	75.5	65
650	650	195	(52.5)[1]	247.5	117.5	117.5	79	65	75.5	65
650	845	130	52.5	497.5	247.5	247.5	79	65	75.5	65
650	845	195	52.5	442.5	247.5	247.5	79	65	75.5	65
650	845	260	52.5	497.5	247.5	247.5	79	65	75.5	65
845	845	130	52.5	497.5	247.5	247.5	79	65	75.5	65
845	845	195	52.5	442.5	247.5	247.5	79	65	75.5	65
845	845	260	52.5	497.5	247.5	247.5	79	65	75.5	65
845	1040	130	52.5	637.5	247.5	247.5	79	65	75.5	65
845	1040	195	52.5	637.5	247.5	247.5	79	65	75.5	65
845	1040	260	52.5	637.5	247.5	247.5	79	65	75.5	65
845	1040	325	52.5	637.5	247.5	247.5	79	65	75.5	65

[1] SH 2/UH not possible in this position if using ID 40 or ID 200

Stopping the workpiece pallet at the **rear** of the longitudinal conveyor

Reference points for assembly (in the transport direction):

- Front edge of the bearing pedestal of a roller (1)
- Front edge of the support profile of the stop gate (2)
- Center axes of the
  - Proximity switch in the SH 2/UH
  - ID40/SLK-... read/write head
  - ID 200/A-... antenna
  - VE 5/... stop gate

Note:
The proximity switch and ID 40 and ID 200…-LF identification systems use the same frequency range. Maintain a minimum distance of 200 mm to prevent interference.

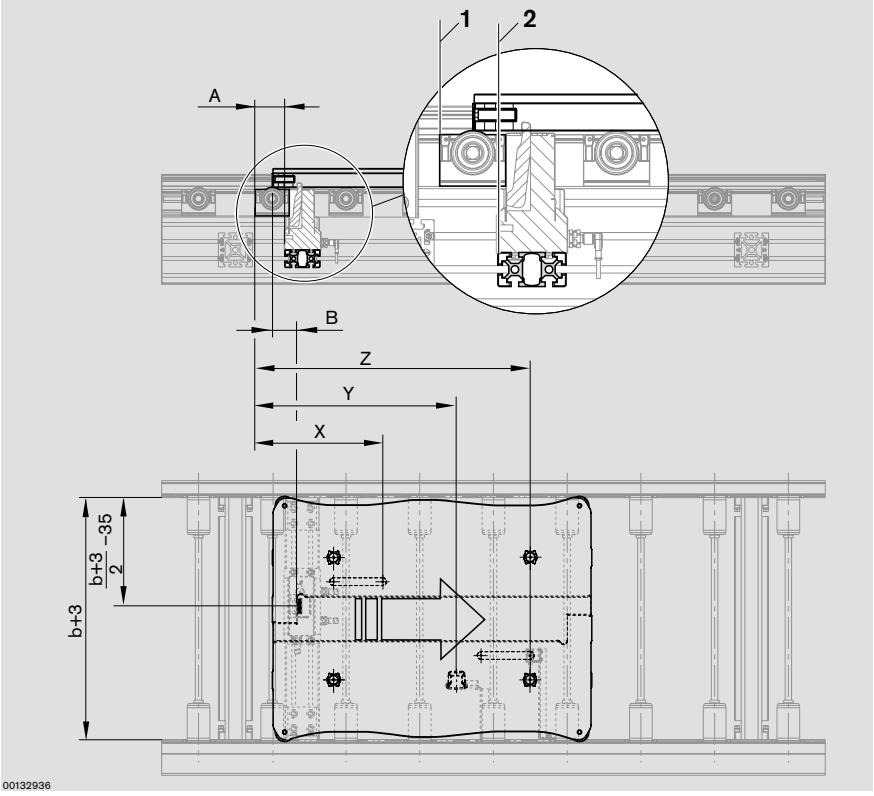

			SH 2/U-H		ID 40	ID 200	VE 5/200, VE 5/D-300		VE 5/D-1000	
b_{WT}	l_{WT}	p	X	Z	Y	Y	A	B	A	B
(mm)	(mm)	(mm)	(mm)	(mm)	(mm)	(mm)	(mm)	(mm)	(mm)	(mm)
455	455	130	337.5	272.5	240	240	46.5	32.5	43	32.5
455	650	130	(532.5)[1]	337.5	473	473	79	65	75.5	65
455	650	195	(532.5)[1]	337.5	473	473	79	65	75.5	65
650	650	130	(522)[1]	282.5	467.5	467.5	79	65	75.5	65
650	650	195	(532.5)[1]	337.5	467.5	467.5	79	65	75.5	65
650	845	130	727.5	282.5	532.5	532.5	79	65	75.5	65
650	845	195	727.5	337.5	532.5	532.5	79	65	75.5	65
650	845	260	727.5	282.5	532.5	532.5	79	65	75.5	65
845	845	130	727.5	337.5	532.5	532.5	79	65	75.5	65
845	845	195	727.5	282.5	532.5	532.5	79	65	75.5	65
845	845	260	727.5	282.5	532.5	532.5	79	65	75.5	65
845	1040	130	915	337.5	727.5	727.5	79	65	75.5	65
845	1040	195	922.5	282.5	727.5	727.5	79	65	75.5	65
845	1040	260	922.5	282.5	727.5	727.5	79	65	75.5	65
845	1040	325	922.5	337.5	727.5	727.5	79	65	75.5	65

[1] SH 2/UH not possible in this position if using ID 40 or ID 200

Position of stop gate and switch bracket on workpiece pallet (in transverse conveyor)

Stopping the WT in the transverse conveyor, **outfeed** to the left

Reference points for installation (in the transport direction):

- Front edge of the bearing pedestal of a roller (1)
- Front edge of the support profile of the stop gate (2)
- Center axis of the proximity switch in the SH 2/UH

Note:
A stop gate is required for each workpiece pallet in the transverse conveyor, as accumulated workpiece pallets cannot be separated.
ID 40 and ID 200 identification systems available on request.

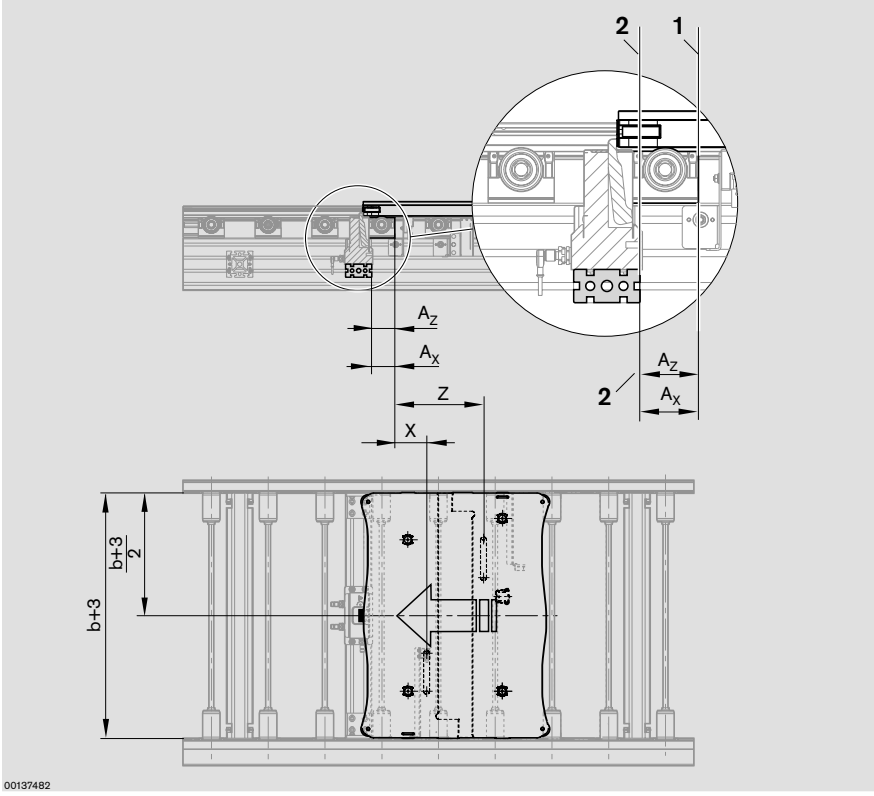

b_{WT} (mm)	l_{WT} (mm)	p (mm)	SH 2/U-H X (mm)	VE 5/200 A_x (mm)	VE 5/D-300 A_x (mm)	VE 5/D-1000 A_x (mm)	SH 2/U-H Z (mm)	VE 5/200 A_z (mm)	VE 5/D-300 A_z (mm)	VE 5/D-1000 A_z (mm)
455	455	130	52.5	48.9	48.9	75.4	182.5	43.2	43.2	39.7
455	650	130	52.5	43.2	43.2	69.7	182.5	37.4	37.4	33.9
455	650	195	–	–	–	–	–	–	–	–
650	650	130	117.5	40.7	40.7	67.2	312.5	40.7	40.7	37.2
650	650	195	117.5	40.7	40.7	67.2	312.5	40.7	40.7	37.2
650	845	130	117.5	39.6	39.6	66.1	312.5	39.6	39.6	36.1
650	845	195	117.5	39.6	39.6	66.1	312.5	39.6	39.6	36.1
650	845	260	–	–	–	–	–	–	–	–
845	845	130	117.5	42.1	42.1	68.6	507.5	42.1	42.1	38.6
845	845	195	117.5	42.1	42.1	68.6	507.5	42.1	42.1	38.6
845	845	260	117.5	42.1	42.1	68.6	507.5	42.1	42.1	38.6
845	1040	130	117.5	25.1	25.1	51.6	507.5	25.1	25.1	21.6
845	1040	195	117.5	25.1	25.1	51.6	507.5	25.1	25.1	21.6
845	1040	260	117.5	42.1	42.1	68.6	507.5	25.1	25.1	21.6
845	1040	325	–	–	–	–	–	–	–	–

Stopping the WT in the transverse conveyor, **outfeed** to the right

Reference points for installation (in the transport direction):

- Front edge of the bearing pedestal of a roller (1)
- Front edge of the support profile of the stop gate (2)
- Center axis of the proximity switch in the SH 2/UH

Note:
A stop gate is required for each workpiece pallet in the transverse conveyor, as accumulated workpiece pallets cannot be separated.
ID 40 and ID 200 identification systems available on request.

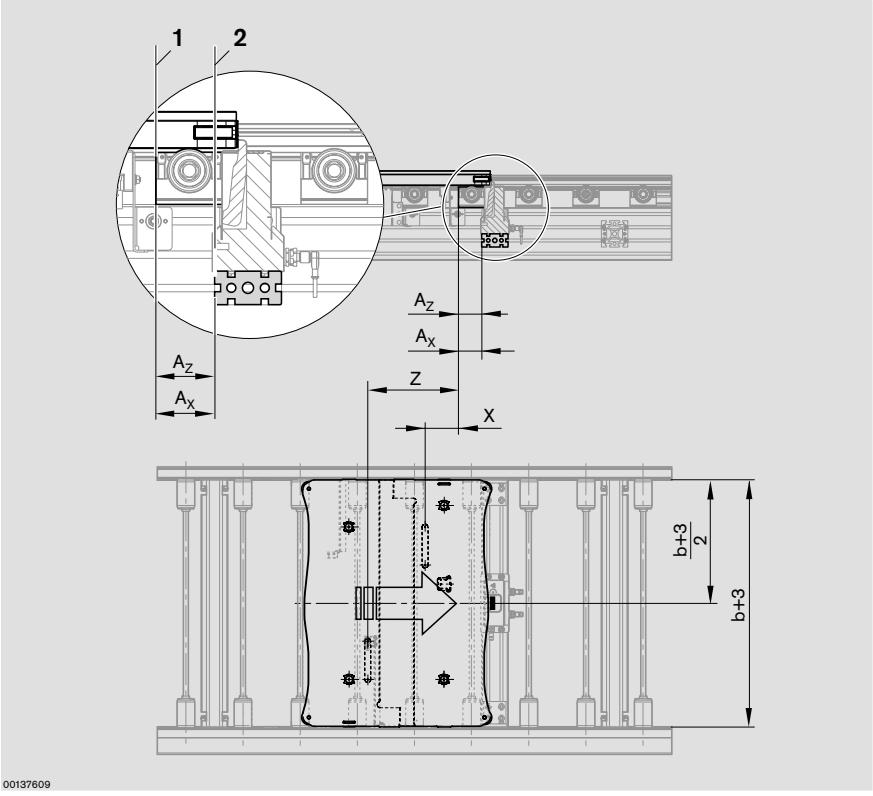

b_{WT} (mm)	l_{WT} (mm)	p (mm)	SH 2/U-H X (mm)	VE 5/200 A_x (mm)	VE 5/D-300 A_x (mm)	VE 5/D-1000 A_x (mm)	SH 2/U-H Z (mm)	VE 5/200 A_z (mm)	VE 5/D-300 A_z (mm)	VE 5/D-1000 A_z (mm)
455	455	130	52.5	48.9	48.9	75.4	182.5	43.2	43.2	39.7
455	650	130	52.5	43.2	43.2	69.7	182.5	37.4	37.4	33.9
455	650	195	–	–	–	–	–	–	–	–
650	650	130	117.5	40.7	40.7	67.2	312.5	40.7	40.7	37.2
650	650	195	117.5	40.7	40.7	67.2	312.5	40.7	40.7	37.2
650	845	130	117.5	39.6	39.6	66.1	312.5	39.6	39.6	36.1
650	845	195	117.5	39.6	39.6	66.1	312.5	39.6	39.6	36.1
650	845	260	–	–	–	–	–	–	–	–
845	845	130	117.5	42.1	42.1	68.6	507.5	42.1	42.1	38.6
845	845	195	117.5	42.1	42.1	68.6	507.5	42.1	42.1	38.6
845	845	260	117.5	42.1	42.1	68.6	507.5	42.1	42.1	38.6
845	1040	130	117.5	25.1	25.1	51.6	507.5	25.1	25.1	21.6
845	1040	195	117.5	25.1	25.1	51.6	507.5	25.1	25.1	21.6
845	1040	260	117.5	42.1	42.1	68.6	507.5	25.1	25.1	21.6
845	1040	325	–	–	–	–	–	–	–	–