RE 51127
Edition: 2025-04

rexroth
A Bosch Company

Motor-pump modules

Type ABMAXX-M(2)PU-A4VSO

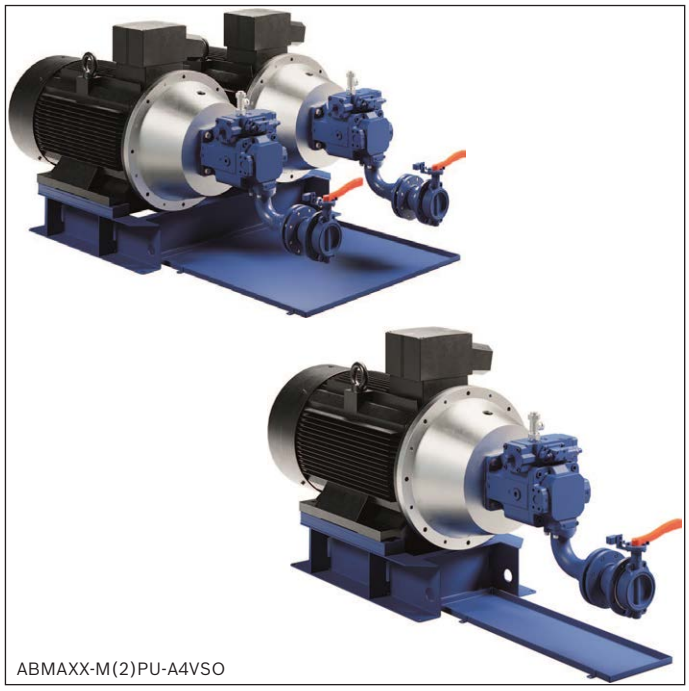

ABMAXX-M(2)PU-A4VSO

- Modular motor-pump unit
- Single and double design
- Component series 1X

Features

- Pump sizes A4VSO 71 ... 370
- Motor power 37 kW ... 315 kW
- Motor voltage 400/690 V – 50 Hz
- Single frame or double frame with integrated drip plate
- With suction bend, compensator and shut-off valve (position-monitored)

Contents

Features	1
Ordering code	2
Technical data	3
Motor-pump modules **MPU**	4
Circuit diagram	4
Dimensions	5
Line connections	6
Selection table MPU	6
Motor-pump modules **M2PU**	7
Circuit diagram	7
Dimensions	8
Line connections	9
Selection table M2PU	9
Installation information	10
Commissioning, maintenance, and operating instructions	10
Further information	11

Ordering code

01		02	03		04	05	06	07		08		09		10
ABMAXX-M(2)PU	**–**	**N**	**1X**	**/**	**A4V**				**/**		**/**		**/**	

01	Modular motor-pump-unit	**ABMAXX MPU**
02	Standard	**N**
03	Component series 10 to 19 (10 to 19: unchanged installation and connection dimensions)	**1X**
04	Pump type A4VSO	**A4V**

Displacement

05	71 ... 370 cm^3 per rotation	**71 ... 370**

Control and adjustment device

06	Pressure controller (DR)	**D**
	Pressure/flow controller (DFR1)	**F**
	Power controller with hyperbolic characteristic curve LR2	**L**
	Pressure controller remote controllable (DRG)	**G**
	Pressure controller for parallel operation (DP)	**P**
	Probe	**X**
07	Motor power 37... 315 kW	**37 ... 315**

Country version

08	Europe	**EU**

Seal material

09	NBR	**M**
	FKM	**V**

Motor manufacturer

10	Hoyer	**HOY**
	Siemens	**SIE**

Technical data
(For applications outside these values, please consult us!)

General		
Weight (depending on configuration level) without oil	kg	470 ... 5000
Installation position		Horizontal
Ambient temperature range	°C	+10 ... +40
Place of installation		Industrial building with minor corrosion conditions
Air humidity	%	< 60
Surface coating CP3		For areas without corrosive atmosphere. Class "CP3" is produced by coating the standard series coating with primer, usually in RAL5010 (gentian blue).

Hydraulic			
Line connections			See table on page 6 (MPU) and page 9 (M2PU)
Hydraulic fluid [1]			See table below
Pump type			A4VSO acc. to data sheet 92050
Pump direction of rotation			Clockwise
Hydraulic fluid temperature range (note viscosity range)		°C	–25 ... +90
	▶ $T_{optimal}$ for HLP46 (DIN 51524)	°C	+40 ... +50
	▶ T_{max} in continuous operation	°C	< +65
Maximum admissible degree of contamination of the hydraulic fluid; cleanliness class according to ISO 4406 (c)			Class 20/18/15 [2]

Hydraulic fluid		**Classification**	**Suitable sealing materials**	**Standards**	**Data sheet**
Mineral oils		HL, HLP, HLPD, HVLP, HVLPD	NBR, FKM	DIN 51524	90220
Bio-degradable	▶ insoluble in water	HETG	FKM	ISO 15380	90221
		HEES	FKM		
	▶ soluble in water	HEPG	FKM	ISO 15380	
Flame-resistant	▶ water-free	HFDU (glycol base)	FKM	ISO 12922	90222
		HFDU (ester base)	FKM		
		HFDR	FKM		
	▶ containing water [3]	HFC (Fuchs: Hydrotherm 46M, Fuchs Renosafe 500; Petrofer: Ultra Safe 620; Houghton: Safe 620; Union: Carbide HP5046)	NBR	ISO 12922	90223

Important information on hydraulic fluids:
- For further information and data on the use of other hydraulic fluids, please refer to the data sheets above or contact us.

[1] The product fulfills the substance requirements of the RoHS Directive 2011/65/EU.

[2] The cleanliness classes specified for the components must be adhered to in hydraulic systems. Effective filtration prevents faults and at the same time increases the life cycle of the components.

[3] For HFC medium pump acc. to datasheet 92053.

Electric		
Electric motor		Low-voltage three-phase current motor
Voltage ***U***	V	400/690 at 50Hz
Efficiency class		IE3 or IE4 from 75 kW
Number of pole pairs		4
Speed ***n***	rpm	1450 at 50 Hz
Protection class		IP55
Installation position		Horizontal

Motor-pump modules MPU

Circuit diagram

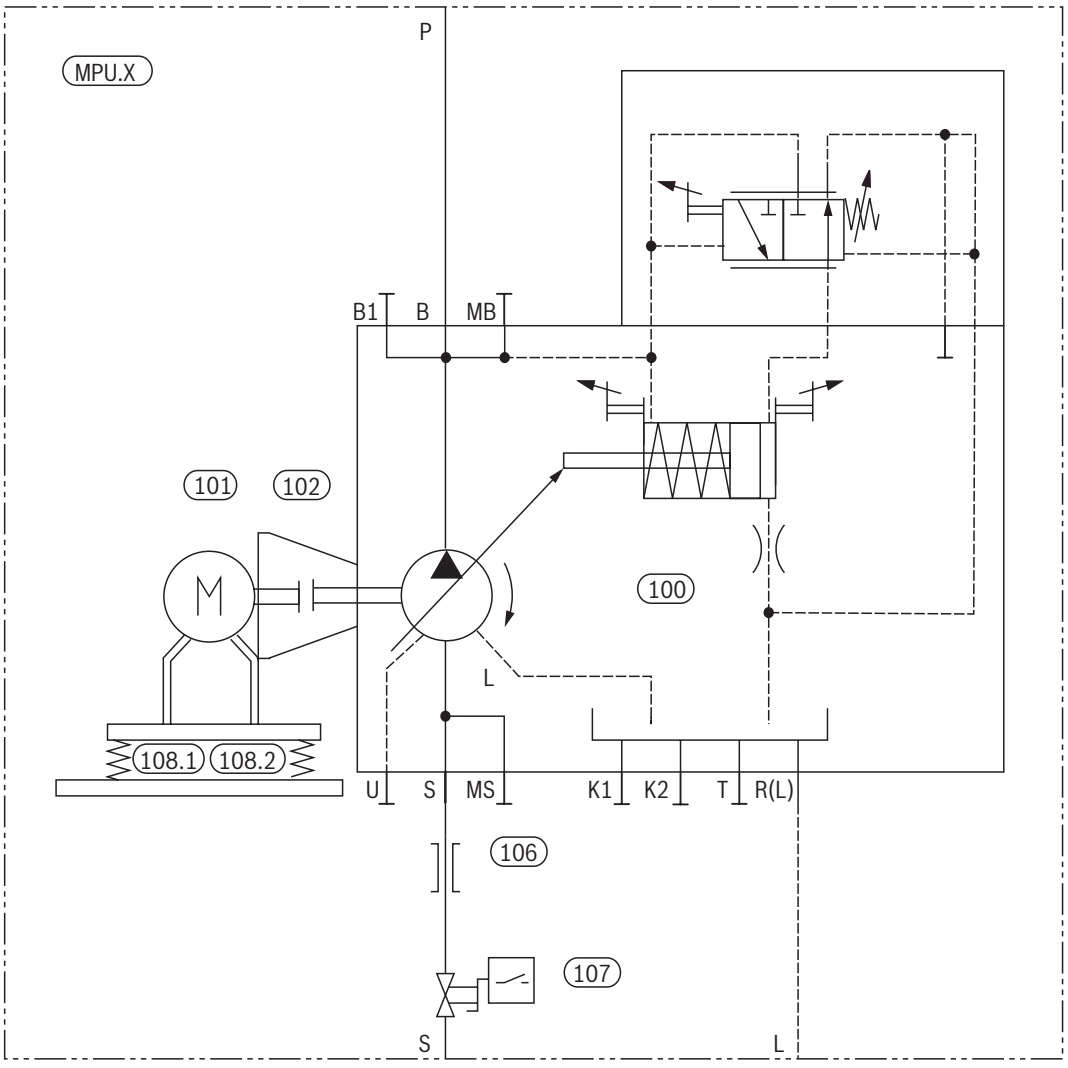

100 Pump
101 Motor
102 Assembly kit (pump carrier and coupling)
106 Compensator
107 Shut-off valve
108 Damping rail

Dimensions:
(dimensions in mm)

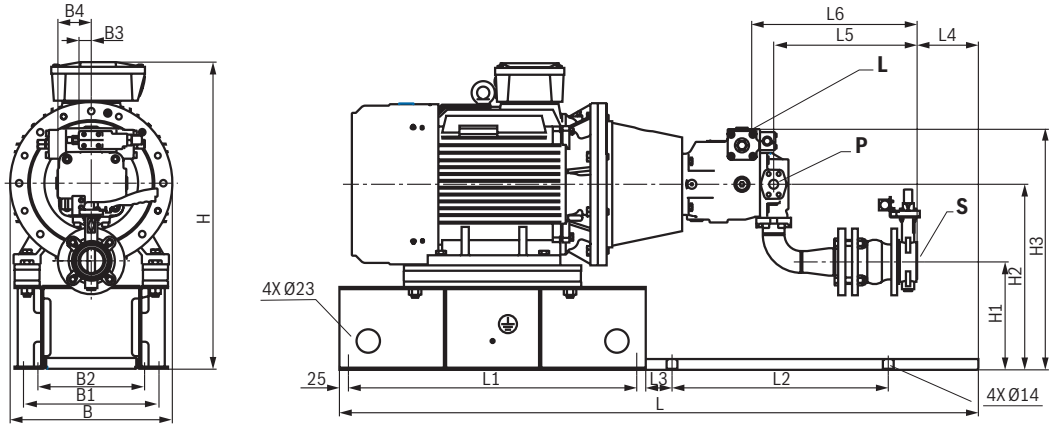

ABMAXX-MPU-N1X/	L	W	H	L1	L2	L3	L4	L5	L6	B1	B2	B3	B4	H1	H2	H3
A4V071D037/EU/M/HOY	1773	450	851	800	600	73	170	398	459	376	296	34	92.5	300	515	668
A4V071D045/EU/M/HOY	1781	450	871	800	600	80.5	165	398	459	376	296	34	92.5	320	535	688
A4V071D055/EU/M/HOY	1882	550	935	800	700	80.5	213	398	459	456	310	34	92.5	345	560	713
A4V071D075/EU/M/HOY	1979	557	962	800	710	143	237	398	459	380	360	34	92.5	345	560	713
A4V125D055/EU/M/HOY	1882	550	934	800	700	80.5	95	443	536	456	310	50	112.5	301	560	749
A4V125D075/EU/M/HOY	1979	557	962	800	710	143	136	443	536	507	360	50	112.5	301	560	749
A4V125D090/EU/M/HOY	2004	557	962	800	710	143	110.5	443	536	507	360	50	112.5	301	560	749
A4V125D110/EU/M/HOY	2410	660	1095	1150	750	68	286	443	536	578	390	50	112.5	336	595	784
A4V180D090/EU/M/HOY	2004	557	962	800	710	143	66	480	581	507	360	50	120	277	560	748
A4V180D110/EU/M/HOY	2410	660	1095	1150	750	68	241	480	581	578	390	50	120	312	595	784
A4V180D132/EU/M/HOY	2495	660	1095	1150	750	68	216	480	581	578	390	50	120	312	595	784
A4V180D160/EU/M/HOY	2520	660	1150	1150	750	119	221	480	581	578	390	50	120	367	650	839
A4V250D110/EU/M/HOY	2410	660	1095	1150	750	68	125	514	629	578	390	55	144	284	595	831
A4V250D132/EU/M/HOY	2495	660	1095	1150	750	68	100	514	629	578	390	55	144	284	595	831
A4V250D160/EU/M/HOY	2514	660	1150	1150	750	113	119	514	629	578	390	55	144	339	650	886
A4V250D200/EU/M/HOY	2514	660	1150	1150	750	113	119	514	629	578	390	55	144	339	650	886
A4V250D250/EU/M/HOY	2730	800	1287	1350	700	94	131	514	629	680	500	55	144	334	645	881
A4V370D160/EU/M/HOY	2514	660	1150	1150	750	113	55	565	693	628	390	55	148	304	650	886
A4V370D200/EU/M/HOY	2514	660	1150	1150	750	113	55	565	693	578	390	55	148	304	650	886
A4V370D250/EU/M/HOY	2730	800	1287	1350	700	94	67	565	693	680	500	55	148	299	645	881
A4V370D315/EU/M/HOY	2723	800	1287	1350	700	124	62	565	693	680	500	55	148	299	645	881

Line connections:

Pump type	Pressure port P	Suction port S	Leakage oil connection L
A4VSO71DR	SAE J518 - 1 in [1]	DN65 PN16	M27x2
A4VSO125DR	SAE J518 - 1 1/4 in [1]	DN80 PN16	M33x2
A4VSO180DR	SAE J518 - 1 1/4 in [1]	DN100 PN16	M33x2
A4VSO250DR	SAE J518 - 1 1/2 in [1]	DN125 PN16	M42x2
A4VSO370DR	SAE J518 - 1 1/2 in [1]	DN150 PN16	M42x2

[1] High pressure SAE flange figure with metric mounting screws.

Selection tables MPU:

Pump A4VSO	Frequency 50 Hz/1450 rpm			Motor size	Mat. no.	Type	Weight
	qv_{max} in l/min	p_{max} in bar	P in kW				
71DR	98	185	37	225S	R987506586	ABMAXX-MPU-N1X/A4V071D037/EU/M/HOY	472 kg
		238	45	225M	R987506588	ABMAXX-MPU-N1X/A4V071D045/EU/M/HOY	504 kg
		295	55	250M	R987506589	ABMAXX-MPU-N1X/A4V071D055/EU/M/HOY	605 kg
		350	75	280S	R987506590	ABMAXX-MPU-N1X/A4V071D075/EU/M/HOY	804 kg
125DR	172	162	55	250M	R987506591	ABMAXX-MPU-N1X/A4V125D055/EU/M/HOY	651 kg
		227	75	280S	R987506592	ABMAXX-MPU-N1X/A4V125D075/EU/M/HOY	849 kg
		276	90	280M	R987506593	ABMAXX-MPU-N1X/A4V125D090/EU/M/HOY	897 kg
		342	110	315S	R987506594	ABMAXX-MPU-N1X/A4V125D110/EU/M/HOY	1211 kg
180DR	248	193	90	280M	R987506595	ABMAXX-MPU-N1X/A4V180D090/EU/M/HOY	910 kg
		237	110	315S	R987506596	ABMAXX-MPU-N1X/A4V180D110/EU/M/HOY	1224 kg
		282	132	315M	R987506597	ABMAXX-MPU-N1X/A4V180D132/EU/M/HOY	1367 kg
		344	160	315L	R987504455	ABMAXX-MPU-N1X/A4V180D160/EU/M/HOY	1454 kg
250DR	344	167	110	315S	R987506598	ABMAXX-MPU-N1X/A4V250D110/EU/M/HOY	1313 kg
		203	132	315M	R987507825	ABMAXX-MPU-N1X/A4V250D132/EU/M/HOY	1469 kg
		249	160	315L	R987506599	ABMAXX-MPU-N1X/A4V250D160/EU/M/HOY	1533 kg
		311	200	315L	R987506600	ABMAXX-MPU-N1X/A4V250D200/EU/M/HOY	1532 kg
		350	250	355M	R987506542	ABMAXX-MPU-N1X/A4V250D250/EU/M/HOY	2272 kg
370DR [2]	515	169	160	315L	R987506601	ABMAXX-MPU-N1X/A4V370D160/EU/M/HOY	1594 kg
		212	200	315L	R987506602	ABMAXX-MPU-N1X/A4V370D200/EU/M/HOY	1648 kg
		267	250	355M	R987506603	ABMAXX-MPU-N1X/A4V370D250/EU/M/HOY	2312 kg
		334	315	355L	R987506604	ABMAXX-MPU-N1X/A4V370D315/EU/M/HOY	2496 kg

[2] For NG370, the SO001 version is available on request: with pulsation reduction. In many installations, this ensures a significant reduction in noise.

Motor-pump modules M2PU

Circuit diagram

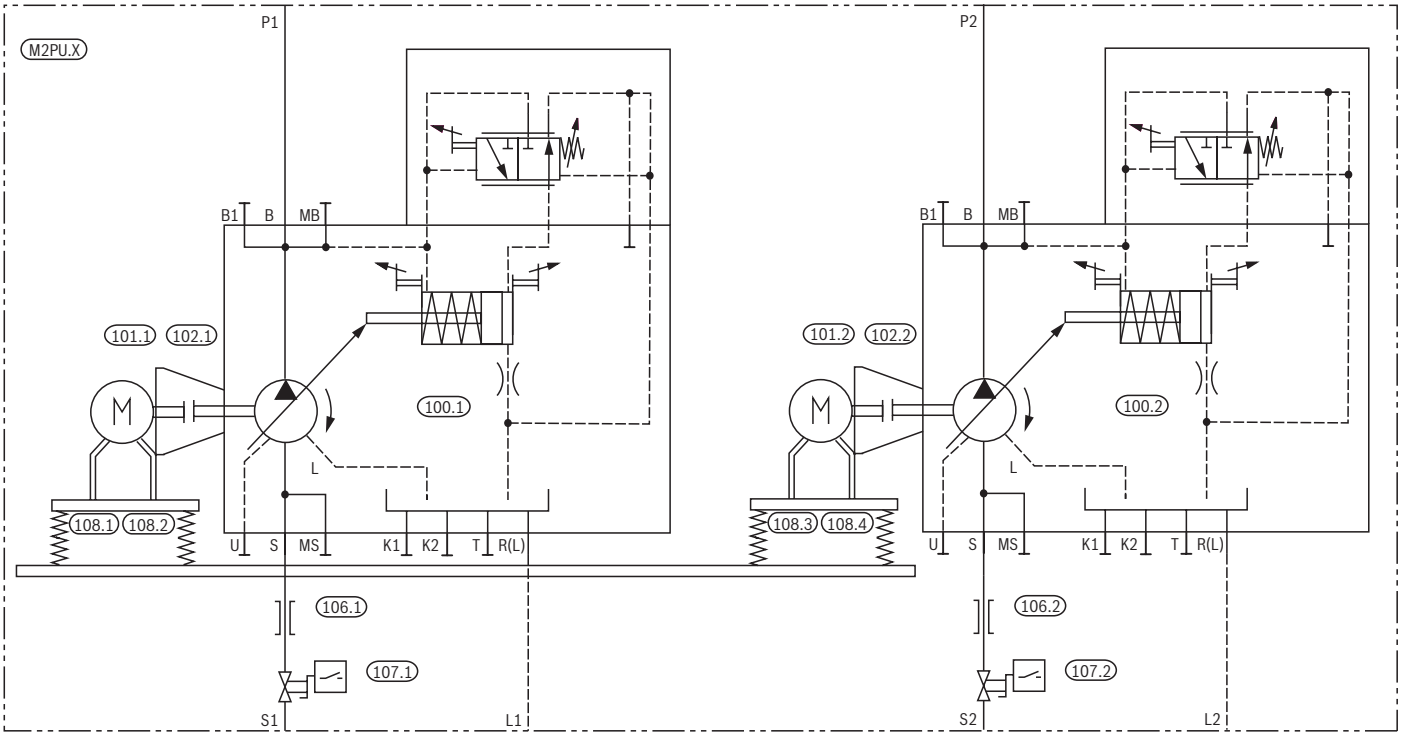

100 Pump
101 Motor
102 Assembly kit (pump carrier and coupling)
106 Compensator
107 Shut-off valve
108 Damping rail

Dimensions:
(dimensions in mm)

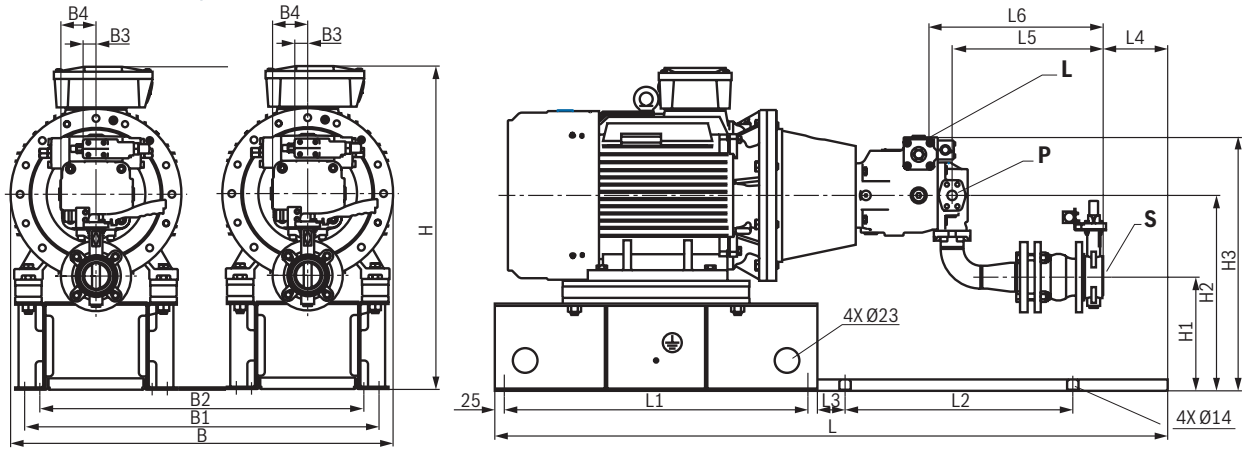

ABMAXX-M2PU-N1X/	L	W	H	L1	L2	L3	L4	L5	L6	B1	B2	B3	B4	B5	H1	H2	H3
A4V071D037/EU/M/HOY	1773	1021	851	800	600	73	170	398	459	947	860	34	92.5	571	300	515	668
A4V071D045/EU/M/HOY	1781	1021	871	800	600	80.5	165	398	459	947	860	34	92.5	571	320	535	688
A4V071D055/EU/M/HOY	1882	1164	935	800	700	80.5	213	398	459	1070	920	34	92.5	614	345	560	713
A4V071D075/EU/M/HOY	1979	1228	962	800	710	143	237	398	459	1178	1030	34	92.5	671	345	560	713
A4V125D055/EU/M/HOY	1882	1164	934	800	700	80.5	95	443	536	1070	920	50	112.5	614	301	560	749
A4V125D075/EU/M/HOY	1979	1228	962	800	710	143	136	443	536	1178	1030	50	112.5	671	301	560	749
A4V125D090/EU/M/HOY	2004	1228	962	800	710	143	110.5	443	536	1178	1030	50	112.5	671	301	560	749
A4V125D110/EU/M/HOY	2410	1410	1095	1150	750	68	286	443	536	1328	1140	50	112.5	750	336	595	784
A4V180D090/EU/M/HOY	2004	1228	962	800	710	143	66	480	581	1178	1030	50	120	671	277	560	748
A4V180D110/EU/M/HOY	2410	1410	1095	1150	750	68	241	480	581	1328	1140	50	120	750	312	595	784
A4V180D132/EU/M/HOY	2495	1410	1095	1150	750	68	216	480	581	1328	1140	50	120	750	312	595	784
A4V180D160/EU/M/HOY	2514	1410	1150	1150	750	113	221	480	581	1328	1140	50	120	750	367	650	839
A4V250D110/EU/M/HOY	2410	1410	1095	1150	750	68	125	514	629	1328	1140	55	144	750	284	595	831
A4V250D132/EU/M/HOY	2495	1410	1095	1150	750	68	100	514	629	1328	1140	55	144	750	284	595	831
A4V250D160/EU/M/HOY	2514	1410	1150	1150	750	113	119	514	629	1328	1140	55	144	750	339	650	886
A4V250D200/EU/M/HOY	2514	1410	1150	1150	750	113	119	514	629	1328	1140	55	144	750	339	650	886
A4V250D250/EU/M/HOY	2730	1690	1287	1350	700	94	131	514	629	1570	1380	55	144	890	334	645	881
A4V370D160/EU/M/HOY	2514	1410	1150	1150	750	113	55	565	693	1328	1140	55	148	750	304	650	886
A4V370D200/EU/M/HOY	2514	1410	1150	1150	750	113	55	565	693	1328	1140	55	148	750	304	650	886
A4V370D250/EU/M/HOY	2730	1690	1287	1350	700	94	67	565	693	1380	1570	55	148	890	299	645	881
A4V370D315/EU/M/HOY	2723	1690	1287	1350	700	124	62	565	693	1380	1570	55	148	890	299	645	881

Line connections:

Pump type	Pressure port P	Suction port S	Leakage oil connection L
A4VSO71DR	SAE J518 - 1 in [1]	DN65 PN16	M27x2
A4VSO125DR	SAE J518 - 1 1/4 in [1]	DN80 PN16	M33x2
A4VSO180DR	SAE J518 - 1 1/4 in [1]	DN100 PN16	M33x2
A4VSO250DR	SAE J518 - 1 1/2 in [1]	DN125 PN16	M42x2
A4VSO370DR	SAE J518 - 1 1/2 in [1]	DN150 PN16	M42x2

[1] High pressure SAE flange figure with metric mounting screws.

Selection table M2PU:

Pump A4VSO	Frequency 50 Hz/1450 rpm			Motor size	Mat. no.	Type	Weight
	qv_{max} in l/min	p_{max} in bar	P in kW				
71DR	98	185	37	225S	R987506605	ABMAXX-M2PU-N1X/A4V071D037/EU/M/HOY	1138 kg
		238	45	225M	R987506606	ABMAXX-M2PU-N1X/A4V071D045/EU/M/HOY	1199 kg
		295	55	250M	R987506607	ABMAXX-M2PU-N1X/A4V071D055/EU/M/HOY	1192 kg
		350	75	280S	R987506608	ABMAXX-M2PU-N1X/A4V071D075/EU/M/HOY	1589 kg
125DR	172	162	55	250M	R987506609	ABMAXX-M2PU-N1X/A4V125D055/EU/M/HOY	1283 kg
		227	75	280S	R987506610	ABMAXX-M2PU-N1X/A4V125D075/EU/M/HOY	1683 kg
		276	90	280M	R987506535	ABMAXX-M2PU-N1X/A4V125D090/EU/M/HOY	1779 kg
		342	110	315S	R987506611	ABMAXX-M2PU-N1X/A4V125D110/EU/M/HOY	2355 kg
180DR	248	193	90	280M	R987506612	ABMAXX-M2PU-N1X/A4V180D090/EU/M/HOY	1856 kg
		237	110	315S	R987506613	ABMAXX-M2PU-N1X/A4V180D110/EU/M/HOY	2435 kg
		282	132	315M	R987506614	ABMAXX-M2PU-N1X/A4V180D132/EU/M/HOY	2721 kg
		344	160	315L	R987506532	ABMAXX-M2PU-N1X/A4V180D160/EU/M/HOY	2878 kg
250DR	344	167	110	315S	R987506615	ABMAXX-M2PU-N1X/A4V250D110/EU/M/HOY	2644 kg
		203	132	315M	R987507826	ABMAXX-M2PU-N1X/A4V250D132/EU/M/HOY	2955 kg
		249	160	315L	R987506616	ABMAXX-M2PU-N1X/A4V250D160/EU/M/HOY	3065 kg
		311	200	315L	R987506617	ABMAXX-M2PU-N1X/A4V250D200/EU/M/HOY	3164 kg
		350	250	355M	R987506534	ABMAXX-M2PU-N1X/A4V250D250/EU/M/HOY	4517 kg
370DR [2]	515	169	160	315L	R987506618	ABMAXX-M2PU-N1X/A4V370D160/EU/M/HOY	3168 kg
		212	200	315L	R987506619	ABMAXX-M2PU-N1X/A4V370D200/EU/M/HOY	3276 kg
		267	250	355M	R987506620	ABMAXX-M2PU-N1X/A4V370D250/EU/M/HOY	4605 kg
		334	315	355L	R987506621	ABMAXX-M2PU-N1X/A4V370D315/EU/M/HOY	4976 kg

[2] For NG370, the SO001 version is available on request: with pulsation reduction. In many installations, this ensures a significant reduction in noise.

Installation information

Fluid tank
- Adjust useful volume of the tank to the operating conditions.
- The admissible fluid temperature must not be exceeded; if necessary, use a cooler

Lines and connections
- Remove the protective plug at the pump.
- Select the clear width of the pipes according to the connections (suction speed max 0.8 m/s).
- Piping and fittings must be carefully cleaned before assembly.
- Observe the installation information of the manufacturers
- The pump pressure connection P must always be protected on the system side with an admissible pressure limitation unit.

Filter
- Use return flow and/or pressure filters

Hydraulic fluid
- Please refer to the information in data sheet 90220.
- Brand-name hydraulic oils are recommended. In order to guarantee functional safety, a minimum cleanliness class 20/18/15 according to ISO4406 is required.
- Different oil types must not be mixed as this might result in degradation and deterioration of the lubricity.
- According to the operating conditions, the oil quality must be checked by means of an oil analysis at certain intervals and the oil must be replaced, if necessary.
- In this connection, it is also necessary to clean the fluid tank.
- Return fluid must not be directly sucked in again under any circumstances. The largest distance between suction and return line possible is to be selected.
- The return flow exit must always be below the oil level.
- Ensure tight assembly of the piping.

Commissioning, maintenance, and operating instructions

In this connection, please refer to the information in the following documents:
– Data sheet 07009
– Data sheet 07009-MON
– Data sheet 92050

Legal provisions

- In Germany, the Ordinance on Industrial Safety and Health (BetrSichV) applies.
- The EU Regulation 640/2009 on the environmentally friendly design of electric motors.

Notice pursuant to the EC Machinery Directive 2006/42/EC, according to appendix II part 1, section A, manufacturer's declaration:

- The assemblies are manufactured in accordance with the harmonized standards DIN EN ISO 4413, DIN EN ISO 12100 and DIN 60204-1.
- Commissioning is prohibited until it was confirmed that the machine into which the assemblies are to be integrated complies with the regulations laid down in the EC Directives.

Further information

▶ Axial piston variable displacement pump A4VSO, series 1X and 3X	Data sheet 92050
▶ Axial piston variable displacement pump A4VSO, series 1X and 30 for HFC hydraulic fluids	Data sheet 92053
▶ Mating connections and cable sets for valves and sensors in hydraulics	Data-sheet 08006
▶ General operating instructions for hydraulic power units and hydraulic assemblies	Data sheet 07009-B
▶ General assembly instructions with information about the transport of the hydraulic power units	Data sheet 07009-MON
▶ Hydraulic fluids based on mineral oils	Data sheet 90220
▶ Information on available spare parts	www.boschrexroth.com/spc

Bosch Rexroth AG
Industrial Hydraulics
Zum Eisengießer 1
97816 Lohr am Main, Germany
Phone +49 (0) 93 52/40 30 20
my.support@boschrexroth.com
www.boschrexroth.com

© All rights reserved to Bosch Rexroth AG, also regarding any disposal, exploitation, reproduction, editing, distribution, as well as in the event of applications for industrial property rights.
The data specified above only serve to describe the product. As our products are constantly being further developed, no statements concerning a certain condition or suitability for a certain application can be derived from our information. The information given does not release the user from the obligation of own judgment and verification. It must be remembered that our products are subject to a natural process of wear and aging.

Bosch Rexroth AG
Industrial Hydraulics
Zum Eisengießer 1
97816 Lohr am Main, Germany
Phone +49 (0) 93 52 / 40 30 20
my.support@boschrexroth.com
www.boschrexroth.com

© All rights reserved to Bosch Rexroth AG, also regarding any disposal, exploitation, reproduction, editing, distribution, as well as in the event of applications for industrial property rights.
The data specified above only serve to describe the product. As our products are constantly being further developed, no statements concerning a certain condition or suitability for a certain application can be derived from our information. The information given does not release the user from the obligation of own judgment and verification. It must be remembered that our products are subject to a natural process of wear and aging.

Bosch Rexroth AG, RE 51127, Edition: 2025-04