RE 51560
Edition: 2025-11

rexroth
A Bosch Company

Return flow filter modules

Type ABMAXX-MFU

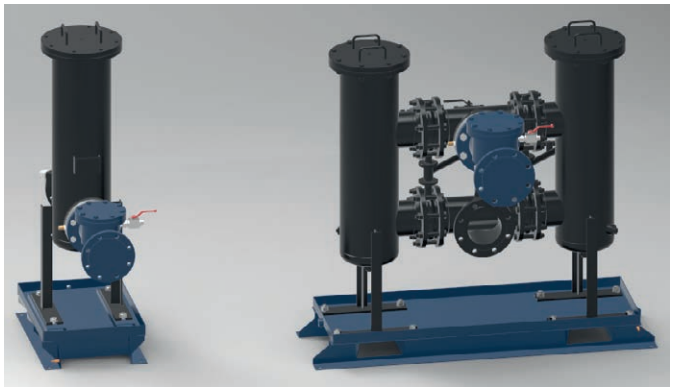

ABMAXX-MFU

- Modular return flow filter unit
- Component series 1X

Features

- Duplex filter switchable or
- Single filter
- Filter rating 10 µm
- Standardized frames with integrated drip plate
- Discharge ball valve for tank line discharge as option
- Electronic maintenance indicator
- Check valve upstream of filter inlet (preventing system-side tank line from idling)

Contents

Features	1
Ordering code	2
Technical data	3, 4
Circuit diagram: Duplex filter ABMAXX-MFU-FD	5
Dimensions: Duplex filter ABMAXX-MFU-FD	6
Line connections: Duplex filter ABMAXX-MFU-FD	7
Selection table: Duplex filter ABMAXX-MFU-FD	7
Circuit diagram: Single filter ABMAXX-MFU-FE	7
Dimensions: Single filter ABMAXX-MFU-FE	8
Line connections: Single filter ABMAXX-MFU-FE	9
Selection table: Single filter ABMAXX-MFU-FE	9
Spare parts	9
Filter element exchange	10
Installation information	11
Legal provisions	12
Further information	12

Ordering code

01		02	03		04	05		06		07		08
ABMAXX-MFU	**–**		**1X**	**/**		**E**	**–**	**F10**	**/**	**EU**	**/**	

01	Return flow filter module	**ABMAXX-MFU**
02	Standard	**N**
	Measuring port and discharge ball valve	**M**
03	Component series 10 to 19 (10 to 19: unchanged installation and connection dimensions)	**1X**
04	Duplex filters	**FD**
	Single filter	**FE**

Filter size

05	Size 2500	**2500**
	Size 3000	**3000**
	Size 4000	**4000**
	Size 6000	**6000**
	Size 7000	**7000**
06	Filter rating 10 µm, glass fiber material, non-cleanable (PWR10) [1]	**F10**

Country version

07	Europe	**EU**

Seal material

08	NBR	**M**
	FKM	**V**

[1] Other filter ratings available on request

Technical data
(For applications outside these values, please consult us!)

General		
Weight (depending on configuration level) without oil	kg	186 ... 1331
Installation position		Vertical
Ambient temperature range	°C	+10 ... +40
Place of installation		Industrial building with minor corrosion conditions
Air humidity	%	<60
Surface coating CP3		For areas without corrosive atmosphere. Class "CP3" is produced by coating the standard series coating with priming, usually in RAL5010 (gentian blue).

Hydraulic			
Line connections			See table on page 7 and 9
Filter type			Duplex or single filter 16FD or 16FE
Hydraulic fluid [1]			See table below
Hydraulic fluid temperature range (observe viscosity range)	▶ $T_{optimal}$ for HLP46 (DIN 51524)	°C	+40 ... +50
	▶ T_{max} in continuous operation	°C	< +65
Maximum admissible degree of contamination of the hydraulic fluid; cleanliness class according to ISO 4406 (c)			Class 20/18/15 [2]

Hydraulic fluid		Classification	Suitable sealing materials	Standards	Data sheet
Mineral oils		HL, HLP, HLPD, HVLP, HVLPD	NBR, FKM	DIN 51524	90220
Flame-resistant	▶ Water-free	HFDU (glycol base)	FKM	ISO 12922	90222
		HFDU (ester base)	FKM		

☞ **Important information on hydraulic fluids:**
- ▶ For further information and data on the use of other hydraulic fluids, please refer to the data sheets above or contact us

[1] The product fulfills the substance requirements of the RoHS Directive 2011/65/EU.

[2] The cleanliness classes specified for the components must be adhered to in hydraulic systems. Effective filtration prevents faults and at the same time increases the life cycle of the components.

Technical data
(For applications outside these values, please consult us!)

Electrical		
Electronic connection		Round plug-in connection M12x1, 4-pole
Contact load, direct voltage	A	Max. 1
Voltage range	V DC	10 ... 30
Max. switching power with resistive load	VA	20, 20 W; (70 VA)
Switching type		Normally open contact at 75% of the response pressure, Normally closed contact at 100% of the response pressure Signal interconnection at 30 °C [86 °F], Return switching at 20 °C [68 °F]
LED indicator in the electronic switching element		Stand-by LED green 75% switching point LED yellow 100% switching point LED red
Protection class according to EN 60529		IP65

☞ **Notice:**
For direct voltage above 24 V, spark extinguishing is to be provided in order to protect the switching contacts.

Circuit diagram: Duplex filter ABMAXX-MFU-FD

Standard

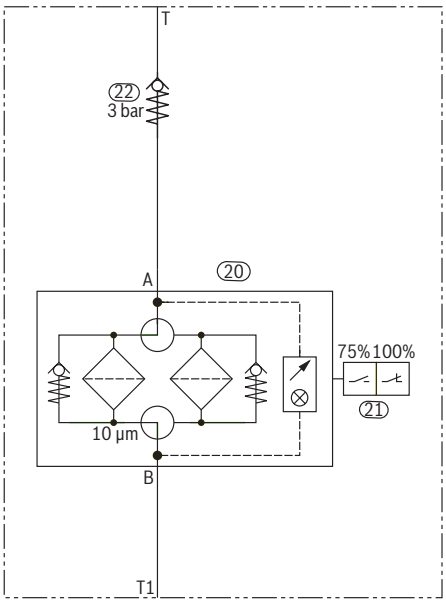

20 Duplex filters
21 Maintenance indicator
22 Check valve

With measuring port and discharge ball valve

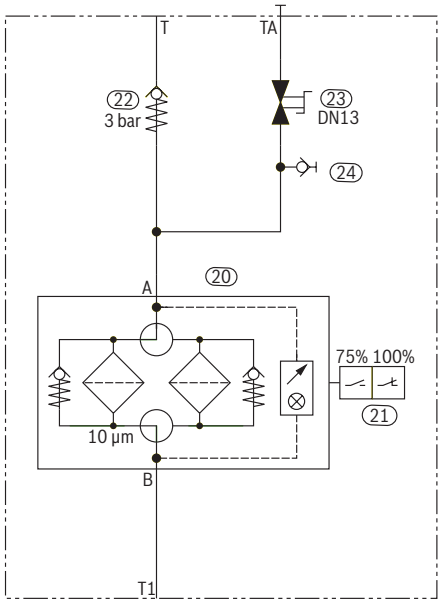

20 Duplex filters
21 Maintenance indicator
22 Check valve
23 Discharge ball valve
24 Measuring coupling

Dimensions: Duplex filter ABMAXX-MFU-FD (Dimensions in mm)

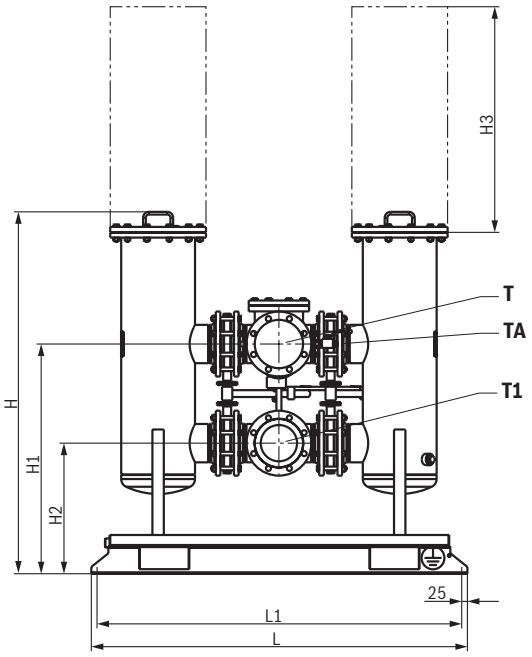

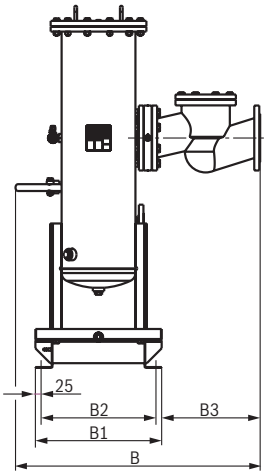

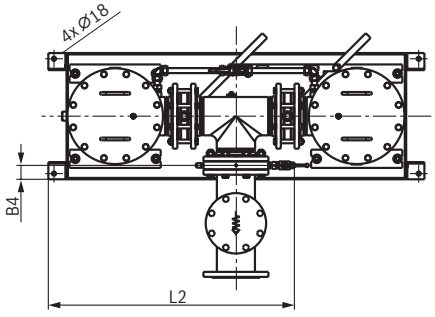

T Inlet
TA Discharge ball valve for tank line discharge (optional)
T1 Outlet

ABMAXX-MFU-FD		L	B	H	L1	L2	H1	H2	H3	B1	B2	B3	B4
N1X	16FD2500-F10/EU/M	1560	942	1508	1510	-	1058	623	860	503	453	326.5	-
M1X		1560	980	1508	1510	1019	1058	623	860	503	453	364.5	52.5
N1X	16FD3000-F10/EU/M	1600	1036	1508	1550	-	1058	623	860	503	453	422	-
M1X		1600	1072	1508	1550	1057	1058	623	860	503	453	457.6	35.5
N1X	16FD4000-F10/EU/M	1650	1034	1588	1600	-	1008	573	990	554	504	394	-
M1X		1650	1072	1588	1600	1082	1008	573	990	554	504	432	61
N1X	16FD6000-F10/EU/M	1800	1339	1853	1750	-	1103	623	990	586	536	540	-
M1X		1800	1377	1853	1750	1184	1103	623	990	586	536	578	35
N1X	16FD7000-F10/EU/M	2200	1729	1963	2150	-	1208	623	954	739	689	641	-
M1X		2200	1767	1963	2150	1417	1208	623	954	739	689	679	63.5

Line connections: Duplex filter ABMAXX-MFU-FD

Filter type	Filter size	T/T1	TA
16FD	2500	DN125/PN16	G 1/2
	3000	DN150/PN16	
	4000	DN150/PN16	
	6000	DN200/PN16	
	7000	DN250/PN16	

Selection table: Duplex filter ABMAXX-MFU-FD

Filter type	Filter size	L/min [1]	Material number	Type	Weight in kg
16FD	2500	DN125/PN16	R901607379	ABMAXX-MFU-N1X/16FD2500-F10/EU/M	386
			R901607381	ABMAXX-MFU-M1X/16FD2500-F10/EU/M	400
	3000	DN150/PN16	R901607382	ABMAXX-MFU-N1X/16FD3000-F10/EU/M	448
			R901607383	ABMAXX-MFU-M1X/16FD3000-F10/EU/M	465
	4000	DN150/PN16	R901607384	ABMAXX-MFU-N1X/16FD4000-F10/EU/M	543
			R901607385	ABMAXX-MFU-M1X/16FD4000-F10/EU/M	560
	6000	DN200/PN16	R901607386	ABMAXX-MFU-N1X/16FD6000-F10/EU/M	676
			R901607387	ABMAXX-MFU-M1X/16FD6000-F10/EU/M	696
	7000	DN250/PN16	R901607388	ABMAXX-MFU-N1X/16FD7000-F10/EU/M	1303
			R901607389	ABMAXX-MFU-M1X/16FD7000-F10/EU/M	1331

[1] At v = 30 mm²/s and △p = 0.5 bar

Circuit diagram: Single filter ABMAXX-MFU-FE

Standard

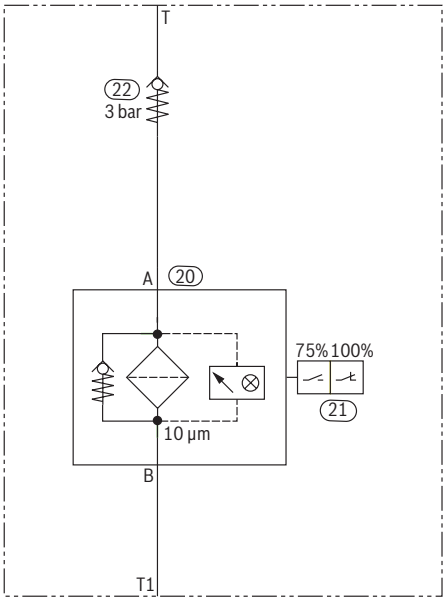

With measuring port and discharge ball valve

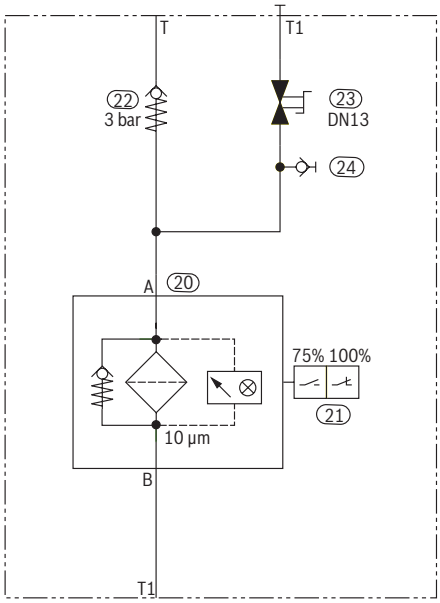

20 Filter
21 Maintenance indicator
22 Check valve

20 Filter
21 Maintenance indicator
22 Check valve
23 Discharge ball valve
24 Measuring coupling

Dimensions: Single filter ABMAXX-MFU-FE (Dimensions in mm)

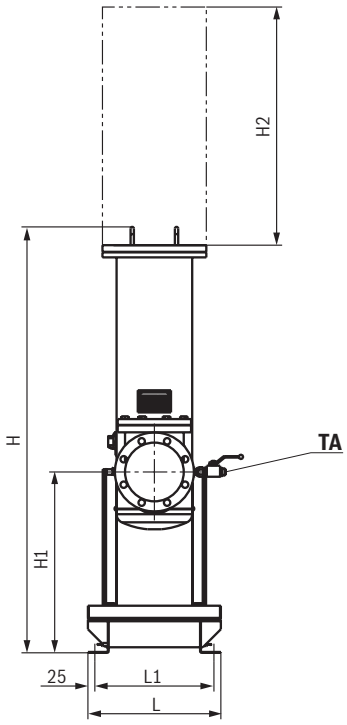

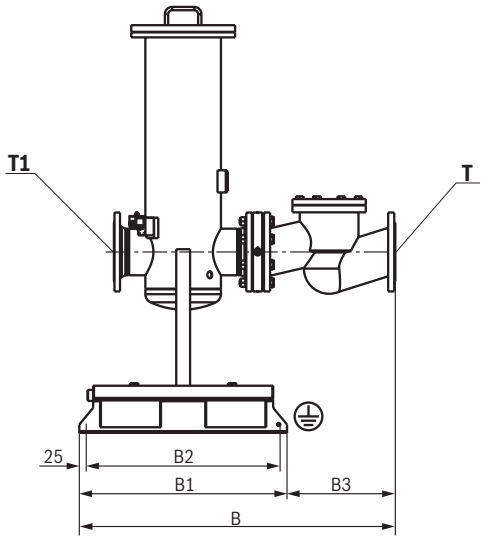

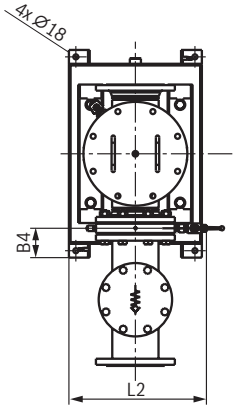

T Inlet
TA Discharge ball valve for tank line discharge (optional)
T1 Outlet

ABMAXX-MFU-FE		L	B	H	L1	L2	H1	H2	B1	B2	B3	B4
N1X/	16FE2500-F10/EU/M	480	1023	1538	430	-	653	860	750	700	273	-
M1X/		480	1061	1538	430	479	653	860	750	700	311	106
N1X/	16FE3000-F10/EU/M	480	1103	1538	430	-	653	860	750	700	353	-
M1X/		480	1141	1538	430	496.5	653	860	750	700	391	106
N1X/	16FE4000-F10/EU/M	530	1153	1618	480	-	603	990	800	750	353	-
M1X/		530	1191	1618	480	521.5	603	990	800	750	391	106
N1X/	16FE6000-F10/EU/M	560	1323	1883	510	-	653	990	850	800	473	-
M1X/		560	1361	1883	510	564	653	990	850	800	511	106
N1X/	16FE7000-F10/EU/M	720	1593	1993	670	-	653	990	990	940	603	-
M1X/		720	1631	1993	670	676.5	653	990	990	940	641	106

Line connections: Single filter ABMAXX-MFU-FE

Filter type	Filter size	T / T1	TA
16FE	2500	DN125/PN16	G1/2
	3000	DN150/PN16	
	4000	DN150/PN16	
	6000	DN200/PN16	
	7000	DN250/PN16	

Selection table: Single filter ABMAXX-MFU-FE

Filter type	Filter size	L/min [1]	Material number	Type	Weight in kg
16FE	2500	2400	R901608742	ABMAXX-MFU-N1X/16FE2500-F10/EU/M	186
			R901608743	ABMAXX-MFU-M1X/16FE2500-F10/EU/M	199
	3000	2950	R901608744	ABMAXX-MFU-N1X/16FE3000-F10/EU/M	211
			R901608745	ABMAXX-MFU-M1X/16FE3000-F10/EU/M	227
	4000	3540	R901608746	ABMAXX-MFU-N1X/16FE4000-F10/EU/M	246
			R901608747	ABMAXX-MFU-M1X/16FE4000-F10/EU/M	262
	6000	5750	R901608748	ABMAXX-MFU-N1X/16FE6000-F10/EU/M	314
			R901608749	ABMAXX-MFU-M1X/16FE6000-F10/EU/M	335
	7000	8100	R901608750	ABMAXX-MFU-N1X/16FE7000-F10/EU/M	604
			R901608751	ABMAXX-MFU-M1X/16FE7000-F10/EU/M	631

[1] At v = 30 mm²/s and ∆p = 0.5 bar

Spare parts

Filter elements:

Filter size	Number of filter elements, single filter FE	Number of filter elements, duplex filter FD	NBR seal		FKM seal	
			Material number	Type	Material number	Type
2500	3	2x3	R928007115	2 0058 PWR10-A00-6-M	R928007088	2 0058 PWR10-A00-6-V
3000						
4000	4	2x4	R928007133	2 0059 PWR10-A00-6-M	R928007124	2 0059 PWR10-A00-6-V
6000	6	2x6				
7000	10	2x10				

Filter element exchange

16 FE 2500-6500

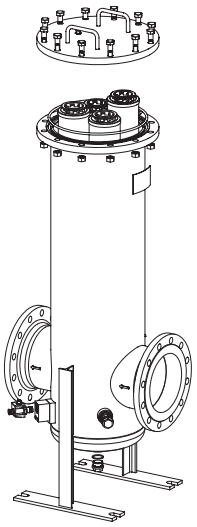

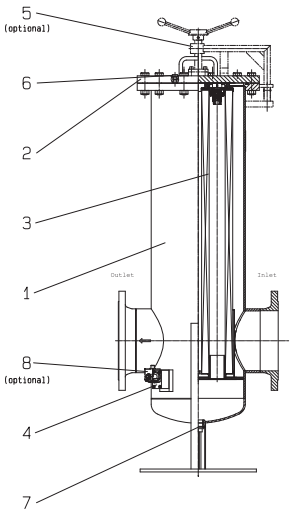

1 Filter housing
2 Filter cover
3 Filter element kit
4 Maintenance indicator
5 Cover lifting device
6 Bleed screw
7 Drain plug
8 Electric maintenance indicator

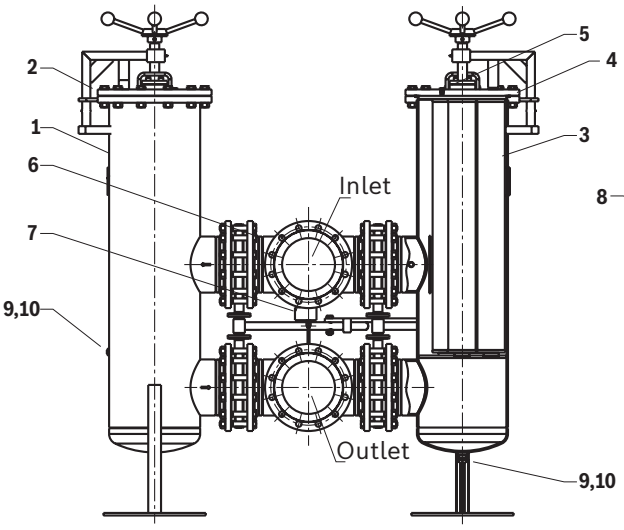

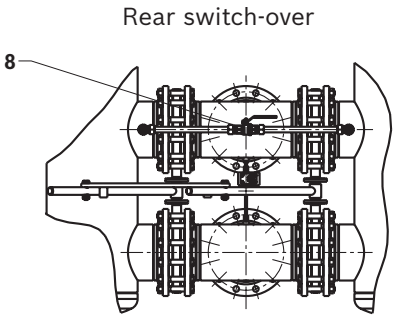

1 Filter housing
2 Filter cover
3 Filter element kit
4 Clogging indicator
5 Bleed screw
6 Shutoff valve
7 Clogging indicator
8 Pressure compensation line
9 Plug screw
10 Seal ring

- Open the pressure compensation. Move the switching lever in the opposite direction until it stops to switch to the clean filter side (only with duplex filters).
- Close the pressure compensation.
- Reduce the operating pressure at the decommissioned filter by opening the bleed screw.
- Lift off the filter cover.
- Open the plug screws at the filter housing and empty the filter.
- Remove the filter elements from the lower spigots in the filter housing by rotating them slightly.
- Check the filter housing for cleanliness and clean it if necessary.
- Replace the filter element.
- Re-install replaced filter elements in the filter housing.
- Check the seal, replace in case of damage or wear.
- Re-attach the filter cover.
- Open the pressure compensation.
- Bleed filter by opening the bleed screw; close when operating medium escapes.
- Close the pressure compensation.

Installation information

Filter

- Compare operating overpressure with name plate information
- Observe the flow direction
- Consider filter element servicing height

Warning!
The tank is under pressure!
Assembly and disassembly work may only take place when the system is depressurized!
Leave the pressure compensation with opened filter closed!
Do not operate the switch-over with opened filter!
Do not exchange the clogging indicator and the pressure compensation while the filter is under pressure!
Functionality and safety are only guaranteed when using genuine Hengst spare parts!
Service only by trained personnel!

Commissioning
Move the switching lever to central position to fill both sides of the filter (only for duplex filters).
Switch on system pump. Pressure compensation is open.
Bleed filter by opening the bleed screw; close when operating medium escapes.
Close the pressure compensation.
Switch the filter into the operating position. The switching lever must rest against the stop. The pressure compensation remains closed.

Service
If, at operating temperature, the red indicator pin from the clogging indicator extends all the way to the stop against the plastic cap, and/or the switching process is triggered in the electronic display, the filter elements are contaminated and must be replaced or cleaned.

☞ **Notice:**
For more information see
General operating instructions for hydraulic power units and hydraulic assemblies 07009-B.

Notice in accordance with EC Machinery Directive 2006/42/EC, Annex II Part 1, Section A, Manufacturer's Declaration:

- The assemblies are manufactured in accordance with the harmonized standards DIN EN ISO 4413, DIN EN ISO 12100 and DIN 60204-1.
- Commissioning is prohibited until it was confirmed that the machine into which the assemblies are to be integrated complies with the regulations laid down in the EC Directives.

Legal provisions

- In Germany, the Ordinance on Industrial Safety and Health (BetrSichV) applies
- EU Regulation 640/2009 on the environmentally sound design of electric motors

Further information

▶ General operating instructions for hydraulic power units and hydraulic assemblies	Instructions 07009-B
▶ General assembly instructions with information about the transport of the hydraulic power units	Instructions 07009-MON
▶ Mating connectors and cable sets for valves, cylinders and sensors in hydraulics	Data sheet 08006
▶ Hydraulic fluids based on mineral oils	Data sheet 90220
▶ Environmentally compatible hydraulic fluids	Data sheet 90221

Bosch Rexroth AG
Industrial Hydraulics
Zum Eisengießer 1
97816 Lohr am Main, Germany
Phone +49 (0) 93 52 / 40 30 20
my.support@boschrexroth.com
www.boschrexroth.com

© All rights reserved to Bosch Rexroth AG, also regarding any disposal, exploitation, reproduction, editing, distribution, as well as in the event of applications for industrial property rights.
The data specified above only serve to describe the product. As our products are constantly being further developed, no statements concerning a certain condition or suitability for a certain application can be derived from our information. The information given does not release the user from the obligation of own judgment and verification. It must be remembered that our products are subject to a natural process of wear and aging.

Bosch Rexroth AG, RE 51560, edition: 2025-11