ctrlX CORE

PRODUCT INFORMATION

Scalable industrial control system for every automation task

ctrlX CORE steers companies into the future. Flexibility and scalability make the industrial control system the perfect solution for adapting to ever-changing market conditions. The Linux-based operating system ctrlX OS and the modular app technology make the industrial control system an all-rounder which can be used to handle almost all current and future tasks in automation. ctrlX CORE proves its worth every day in a wide range of industry segments and topologies, whether as a PLC control system in automation or in complex motion control applications.

You can find more information at: www.ctrlx-automation.com/ctrlx-core

Configurator

Community

Contact

Dimensions

ctrlX CORE X3 **ctrlX CORE^{plus} X3** **ctrlX CORE & ctrlX CORE^{plus} X3**

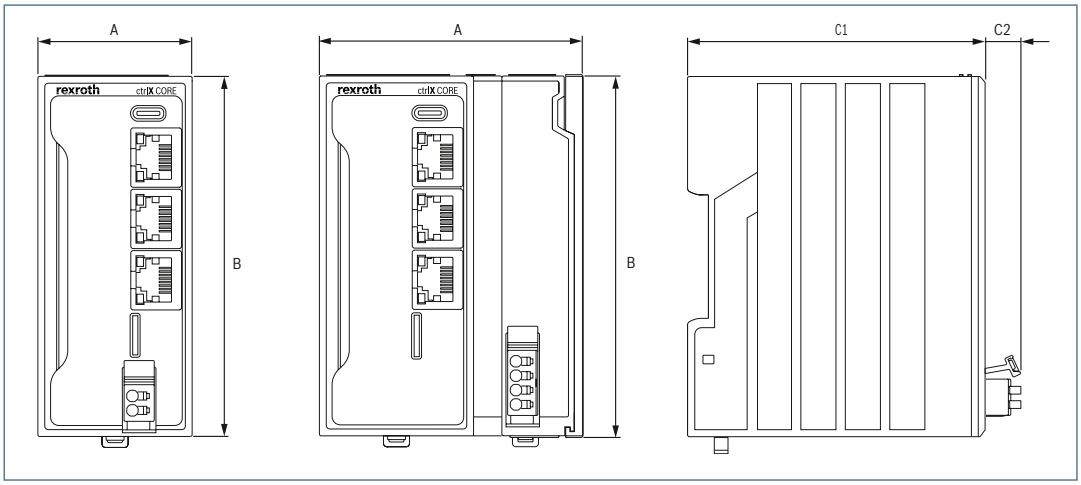







Typ	ctrlX CORE X3	ctrlX CORE^{plus} X3
A	45 mm	77.5 mm
B	105 mm	105 mm
C1	87 mm	87 mm
C2	10.5 mm	10.5 mm

© Bosch Rexroth AG 2026
Subject to change!

Bosch Rexroth AG
Bgm.-Dr.-Nebel-Str. 2 | 97816 Lohr, Germany
ctrlx-automation.com

A Bosch Company

ctrlX AUTOMATION

Dimensions

ctrlX CORE^{plus} X5

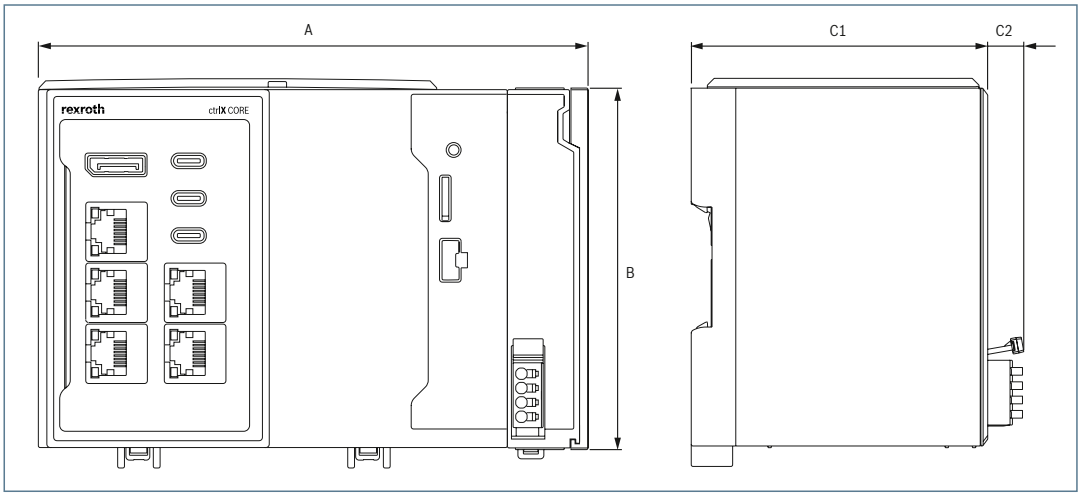

Configurator

Community

Contact

ctrlX CORE^{plus} X7

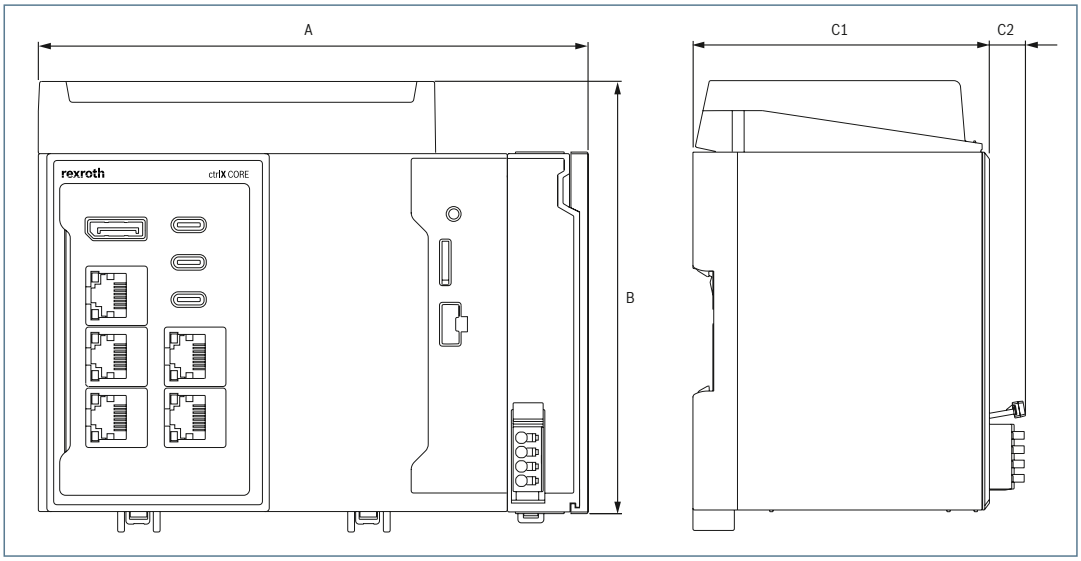







Typ	ctrlX CORE^{plus} X5	ctrlX CORE^{plus} X7
A	160.6 mm	160.6 mm
B	105 mm	126 mm
C1	87 mm	87 mm
C2	10.5 mm	10.5 mm

The data specified above only serve to describe the product. No statements concerning a certain condition or suitability for a certain application can be derived from our information. The information given does not release the user from the obligation of own judgment and verification. It must be remembered that our products are subject to a natural process of wear and aging.

rexroth
A Bosch Company

ctrlX AUTOMATION

Processor	**ctrlX CORE X3**	**ctrlX CORE^{plus} X3**
CPU	64 Bit Quad-Core ARM CPU	64 Bit Quad-Core ARM CPU
Memory storage	**ctrlX CORE X3**	**ctrlX CORE^{plus} X3**
Fixed storage	4 GB eMMC	4 GB eMMC
RAM	2 GB	2 GB
Remanent memory	128 kByte	2 MByte
Hardware interfaces	**ctrlX CORE X3**	**ctrlX CORE^{plus} X3**
Ethernet (EtherCAT master)	1 x GBit Ethernet (RJ45)	1 x GBit Ethernet (RJ45)
Ethernet (Engineering port)	1 x GBit Ethernet (RJ45)	1 x GBit Ethernet (RJ45)
Ethernet (Engineering port, TSN endpoint)	1 x GBit Ethernet (RJ45)	1 x GBit Ethernet (RJ45)
USB	1 x USB-C (2.0)	1 x USB-C (2.0)
SD card	1 x Micro-SD	1 x Micro-SD
IO and functional onboard extensions	**ctrlX CORE X3**	**ctrlX CORE^{plus} X3**
IO integration	not activated	onboard
Multi Ethernet	not activated	optional
Operation	**ctrlX CORE X3**	**ctrlX CORE^{plus} X3**
Operating system	ctrlX OS (Linux Ubuntu Core based)	ctrlX OS (Linux Ubuntu Core based)
Communication	**ctrlX CORE X3**	**ctrlX CORE^{plus} X3**
Fieldbus communication	EtherCAT master (RJ45)	EtherCAT master (RJ45) Multi-Ethernet
Engineering/HMI	via GBit Ethernet (RJ45)	via GBit Ethernet (RJ45)
Engineering, TSN endpoint	GBit Ethernet (RJ45)	GBit Ethernet (RJ45)
Electrical data	**ctrlX CORE X3**	**ctrlX CORE^{plus} X3**
Supply voltage	24 VDC (19.2 - 30.0 VDC)	24 VDC (19.2 - 30.0 VDC)
Norms and Standards	**ctrlX CORE X3**	**ctrlX CORE^{plus} X3**
Standards	CE, UL, CSA	CE, UL, CSA
Certification	Industrial area class A	Industrial area class A
Environmental conditions	**ctrlX CORE X3**	**ctrlX CORE^{plus} X3**
Permissible temperature (operation)	-25 °C to +55 °C (fanless up to 2000 m)	-25 °C to +55 °C (fanless up to 2000 m)
Permissible temperature (storage)	-40 °C to +70 °C	-40 °C to +70 °C
Permissible humidity (operation)	5 % to 85 % (EN 61131-2)	5 % to 85 % (EN 61131-2)
Degree of protection	IP20	IP20
Protection category	III	III
Mechanical tests	**ctrlX CORE X3**	**ctrlX CORE^{plus} X3**
Vibration resistance	1 g	1 g
Shock resistance	15 g	15 g

Configurator

Community

Contact





The data specified above only serve to describe the product. No statements concerning a certain condition or suitability for a certain application can be derived from our information. The information given does not release the user from the obligation of own judgment and verification. It must be remembered that our products are subject to a natural process of wear and aging.

rexroth
A Bosch Company

ctrlX AUTOMATION

Processor	**ctrlX CORE^plus X5**	**ctrlX CORE^plus X7**
CPU	Intel ATOM	Intel Core i7
Memory storage	**ctrlX CORE^plus X5**	**ctrlX CORE^plus X7**
Fixed storage	16 GB eMMC	32 GB eMMC
RAM	8 GB	16 GB
Remanent memory	2 MByte	2 MByte
Hardware interfaces	**ctrlX CORE^plus X5**	**ctrlX CORE^plus X7**
Ethernet (EtherCAT master)	2 x GBit Ethernet (RJ45)	2 x GBit Ethernet (RJ45)
Ethernet (Engineering port)	1 x GBit Ethernet (RJ45)	1 x GBit Ethernet (RJ45)
Ethernet (Engineering port, TSN endpoint)	2 x GBit Ethernet (RJ45)	2 x GBit Ethernet (RJ45)
USB	3 x USB-C (3.1)	3 x USB-C (3.1)
SD card	1 x Micro-SD	1 x Micro-SD
IO and functional onboard extensions	**ctrlX CORE^plus X5**	**ctrlX CORE^plus X7**
IO integration	onboard	onboard
Multi Ethernet	optional	optional
Operation	**ctrlX CORE^plus X5**	**ctrlX CORE^plus X7**
Operating system	ctrlX OS (Linux Ubuntu Core based)	ctrlX OS (Linux Ubuntu Core based)
Communication	**ctrlX CORE^plus X5**	**ctrlX CORE^plus X7**
Fieldbus communication	EtherCAT master (RJ45) Multi-Ethernet	EtherCAT master (RJ45) Multi-Ethernet
Engineering/HMI	via GBit Ethernet (RJ45)	via GBit Ethernet (RJ45)
Engineering, TSN endpoint	GBit Ethernet (RJ45)	GBit Ethernet (RJ45)
Electrical data	**ctrlX CORE^plus X5**	**ctrlX CORE^plus X7**
Supply voltage	24 VDC (19.2 - 30.0 VDC)	24 VDC (19.2 - 30.0 VDC)
Norms and Standards	**ctrlX CORE^plus X5**	**ctrlX CORE^plus X7**
Standards	CE	CE, UL, CSA
Certification	Industrial area class A	Industrial area class A
Environmental conditions	**ctrlX CORE^plus X5**	**ctrlX CORE^plus X7**
Permissible temperature (operation)	-25 °C to +55 °C (fanless up to 50 °C)	-25 °C to +55 °C (active cooled)
Permissible temperature (storage)	-40 °C to +70 °C	-40 °C to +70 °C
Permissible humidity (operation)	5 % to 85 % (EN 61131-2)	5 % to 85 % (EN 61131-2)
Degree of protection	IP20	IP20
Protection category	III	III
Mechanical tests	**ctrlX CORE^plus X5**	**ctrlX CORE^plus X7**
Vibration resistance	1 g	1 g
Shock resistance	15 g	15 g

Configurator

Community

Contact





The data specified above only serve to describe the product. No statements concerning a certain condition or suitability for a certain application can be derived from our information. The information given does not release the user from the obligation of own judgment and verification. It must be remembered that our products are subject to a natural process of wear and aging.

rexroth
A Bosch Company