rexroth
A Bosch Company

Standard power unit ABPAC



configurable
connectable
efficient

www.boschrexroth.com/abpac



The ABPAC is a smart standard power unit for all areas in which hydraulic solutions are used and a pressure supply unit is required – for example, in general mechanical engineering, metal-cutting machine tools, as well as in presses and material handling.

An individual hydraulic power unit efficiently produced as a serial product: tailored, cost-effective, intelligent

Hydraulic power units for mechanical engineering are subject to stricter requirements than ever before: they should be powerful, energy-efficient, and quickly available, yet also intelligent, flexible, and of course cost-effective at the same time. With the ABPAC standard power units, Bosch Rexroth has come up with a convincing answer. The online configurator enables you to find your individual solution in no time. Your entry into Industry 4.0?

Short delivery times, faster startup

The portfolio of components defined in the modular system can reproduce a wide range of customer-specific power unit solutions via the convenient online configurator. The configurator immediately provides you with all the necessary information – from technical data through to prices. Everything is comprehensively documented. If you require individual solutions outside the modular system, your usual Rexroth contact will be happy to assist you at all times.

Delivery times are drastically reduced due to the use of standard components from Bosch Rexroth's GoTo program, standardized manufacturing processes, and a flexible steel construction concept without welding.

Ready for IoT

The IoT gateway software offers you transparency for your machine and process data. Real-time monitoring of process data, such as temperature, pressure and vibration, ensures consistently high quality in production. Rule-based evaluation of specific information simplifies predictive maintenance of your systems.

SPECIAL PROPERTIES

- Browser-based configuration
- Rapid design and transparency
- Visualization via web app
- Open interfaces
- Integration of a variety of different data sources
- Interface to big data systems (e.g. ODiN)

POWER UNITS IN A FLASH

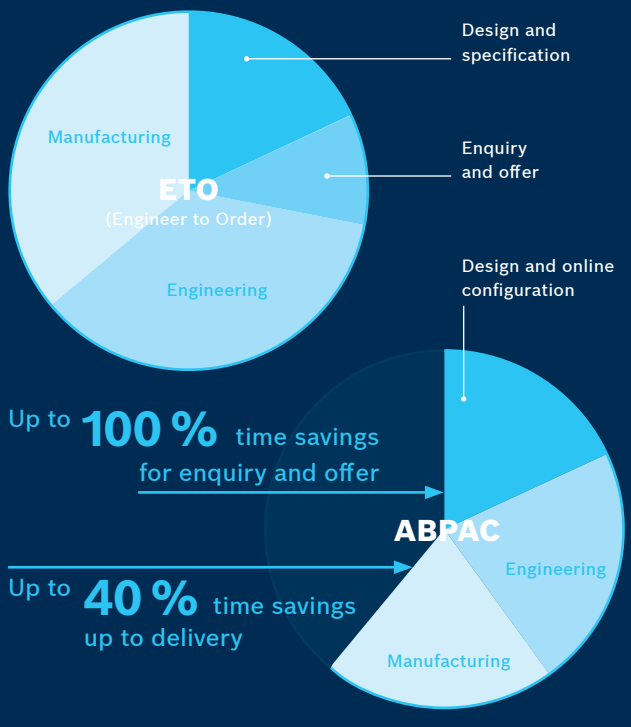

The online configurator delivers time savings of up to 100 % at the enquiry and offer stage; standard modules reduce engineering and production outlay by up to 40 %.

Consistently modular: never before was a standard power unit so easy to individualize and so efficient to produce.

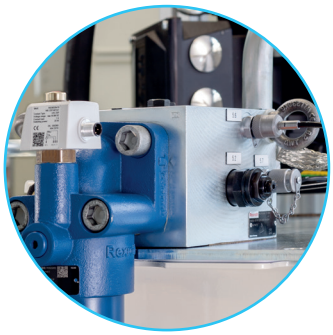

Multifunctional block:
with all basic functions and with variable interfaces
The extremely compact multifunctional block contains all the standard basic functions you need – from pressure filtration through to the bypass for FcP/SvP applications. It is the central interface to advanced hydraulic control systems. This saves space, reduces the piping work and gives you the option to integrate the hydraulic control either in the ABPAC or in the machine. There are four designs available in two sizes (with/without pressure filtration as well as with/without mounting option for the standard hydraulic control IH20).

Mechanical basic elements:
flexible set-ups, extensions, adjustments
The Rexroth mechanical basic elements fit anywhere on each side of the tank. The dimensions are variable in this respect, with the variance arising only in assembly. This offers a high degree of flexibility and allows customer-specific add-ons to realize easily.

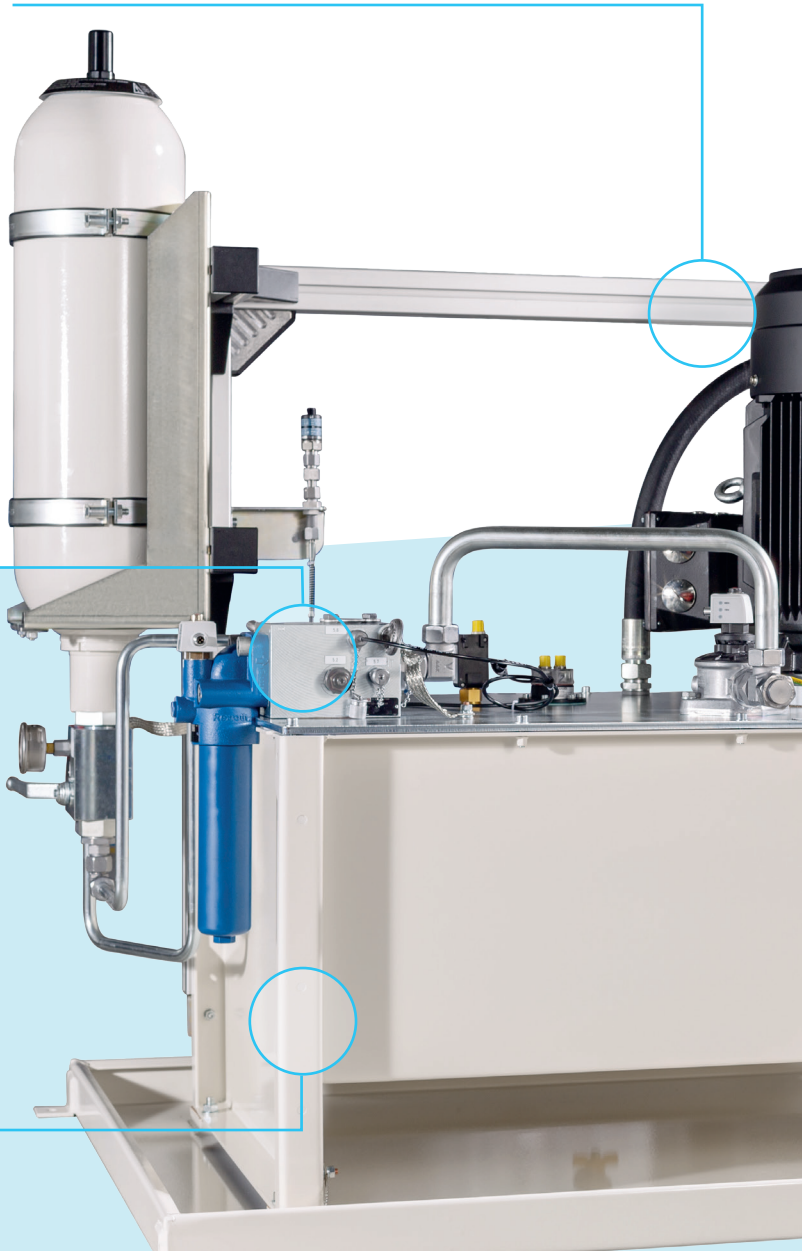

Clever design:
screws instead of welding
The steel construction and tank concept provide unprecedented flexibility. The standardized basic tanks require no welded-on elements and are available in tank capacities between 100 and 630 liters. The variance is in the assembly instead of the steel construction as is usual, which considerably reduces delivery and commissioning times. Individual adjustments can be made without any problems via the screwed cover. The ratio between hydraulic power and tank capacities can be easily optimized, depending on the application.



Save energy:
with variable-speed Sytronix drives
You can save a lot of energy and money when you optionally use drives from the Sytronix modular system. The FcP 5020 and SvP 7020 variable-speed drives are not only particularly powerful and quiet, more importantly, they save up to 80 % energy!

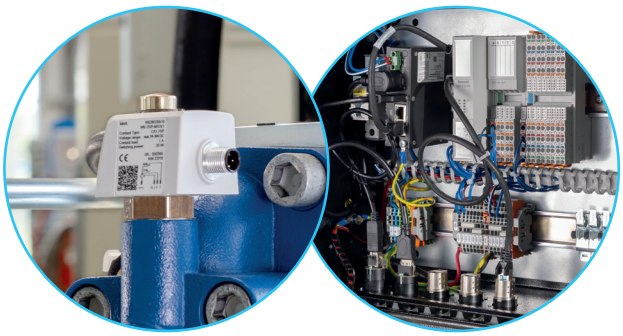

Connectable:
i4.0-ready thanks to comprehensive sensor package
A comprehensive and universal sensor package continuously records all relevant system states, such as oil quality, efficiency, pressures, filling levels and temperatures Pre-
evaluation and forwarding via the IoT gateway enable predictive condition monitoring. The ABPAC can be connected vertically and horizontally. Visualization of power unit states can be performed simply by means of an intuitive web browser interface. The IoT gateway concept therefore requires minimal effort for commissioning and offers optimally convenient operation.

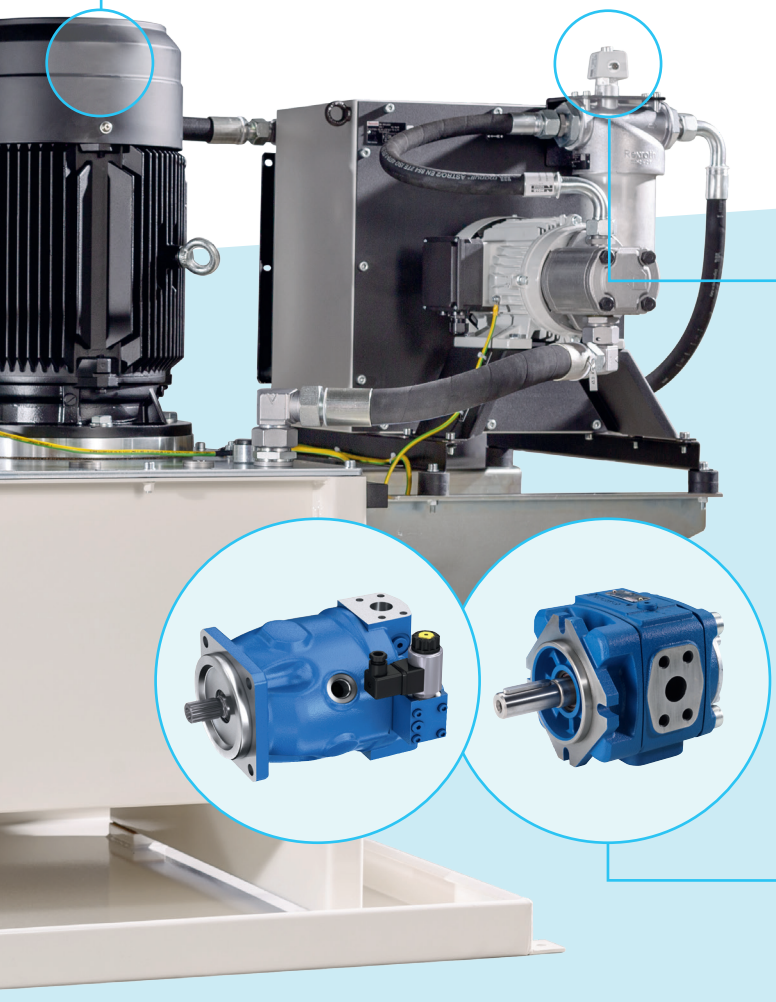

Individual:
the right drive for every application
With the different fixed and variable displacement pumps you can easily implement your individual drive concept. And in the smallest space – with the same performance range. The current motor standards IE3 or IE4 (Conversion to 75kW IE4) are thereby complied with at all times.

Available pumps:
- Internal gear pumps (PGH, PGF, fixed displacement pumps installed vertically)
- External gear pumps (AZPJ [Silence Plus])
- Axial piston pumps (A10VSO NG140 series 32 pumps installed horizontally)

Easy to configure online: get your own solution with just a few clicks





The ABPAC is consistently modular in design and can be configured in a few clicks with the online configurator based on the requirements and hydraulic assemblies required. The software tool guides you clearly through the process. It queries the hydraulic and technical key data, such as working pressure, flow, and the type of actuator, and proposes the appropriate assemblies.

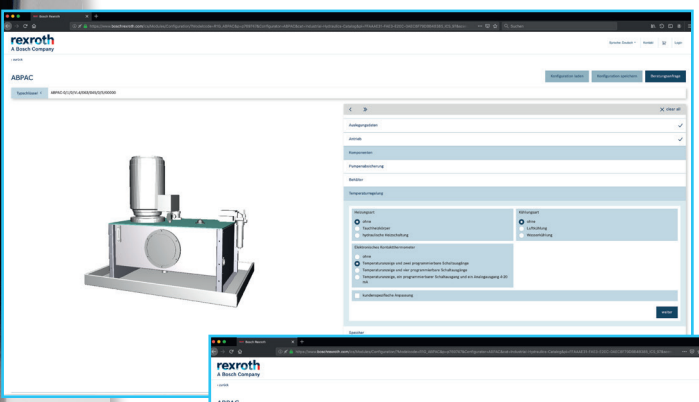

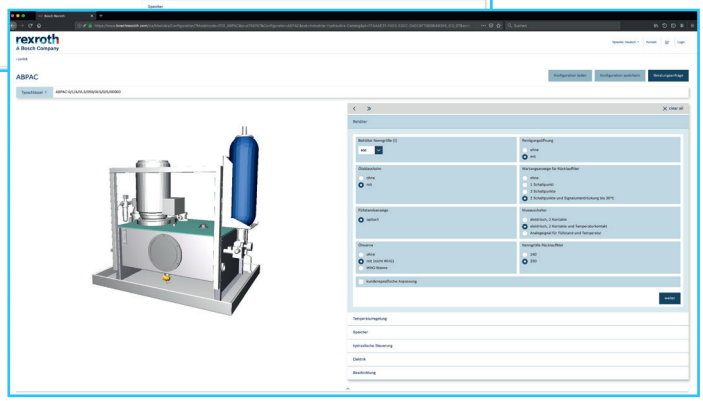

As soon as the configuration is complete, the program produces a complete documentation package with initial information on installation dimensions, parts lists, price, and delivery time. You can quickly and easily jump to customer-specific adaptations at any time. Additional assemblies such as coolers or control systems can also be configured. You can therefore design a customized power unit more easily than ever before.

ADVANTAGES AT A GLANCE

- **Online configurator** for customized power units including documentation
- Intelligent **condition monitoring** via standardized bus interface and advanced sensor technology
- User-driven, platform-neutral **visualizations** on smart devices
- Sytronix FcP and SvP (optional) for increased **energy efficiency** and **noise reduction**
- Basic functions integrated in the **multifunctional block**
- **Interface** to additional hydraulic control concepts
- Wide **area of applications**: metal-cutting machine tools, wood processing, presses, plastics processing machines, etc.
- Products from the GoTo program for **optimized delivery times**

Configurations

TECHNICAL KEY DATA

- Tank capacity: 100 to 630 liters
- Flow: max. 200 l/min
- Operating pressure: max. 315 bar
- Multifunctional block: in 4 designs
- Sytronix modular system: optionally FcP 5020
- Design: simplified, flexible steel construction

Power unit variants	Pump types	Q_{thmax} l/min 1,450 rpm	Pressure Tank	Nominal power electric motor [kW]												
				3	4	5,5	7,5	11	15	18,5	22	30	37	45	55	75
with fixed displacement pump		27	p [bar]		**82**	**112**	**153**	**210**								
			Size		100	100|160	100|160	160|250								
		29	p [bar]		**67**	**94**	**130**	**195**	**210**							
			Size		100	100|160	100|160	160|250	160|250							
		36	p [bar]		**53**	**76**	**105**	**156**	**210**							
			Size		160	160	160	160|250	160|250							
		47	p [bar]			**65**	**89**	**132**	**180**	**210**						
			Size			160	160	160|250	160|250	250|400						
		58	p [bar]				**63**	**97**	**135**	**169**	**180**					
			Size				250	250	250	250|400	250|400					
	PGH4-X/020	29	p [bar]					**203**	**280**	**315**						
			Size					160|250	160|250	250|400						
	PGH4-X/025	36	p [bar]					**161**	**221**	**274**	**315**					
			Size					160|250	160|250	250|400	250|400					
	PGH4-X/032	47	p [bar]						**173**	**212**	**252**	**315**				
			Size						160|250	250|400	250|400	250|400				
	PGH4-X/040	58	p [bar]							**174**	**207**	**281**	**315**			
			Size							250|400	250|400	250|400	400			
	PGH4-X/050	73	p [bar]							**142**	**170**	**233**	**250**	**250**		
			Size							250|400	250|400	250|400	400	400		
	PGH5-X/063	93	p [bar]								**127**	**175**	**216**	**265**		
			Size								400	400	400	400		
with external gear pump	AZPJ-22-016	22	p [bar]	**67**	**91**	**127**	**174**	**250**								
			Size	100	100	100|160	100|160	160|250								
	AZPJ-22-019	27	p [bar]	**57**	**77**	**107**	**147**	**215**	**250**							
			Size	100	100	100|160	100|160	160|250	160|250							
	AZPJ-22-022	31	p [bar]		**64**	**89**	**123**	**181**	**210**							
			Size		100|160	100|160	100|160	160|250	160|250							
	AZPJ-22-025	35	p [bar]			**81**	**111**	**165**	**185**							
			Size			160	160	160|250	160|250							
	AZPJ-22-028	39	p [bar]			**71**	**98**	**130**								
			Size			160	160	160|250								
with control pump and DFR1/DRS (NG140 series 32 with DRS-regulator)	A10VSO 18	26	p [bar]		**90**	**110**	**138**	**228**	**280**							
			Size		100	100	100	160	160							
	A10VSO 28	40	p [bar]			**70**	**95**	**132**	**180**	**222**	**280**					
			Size			160	160	160|250	160|250	250	250					
	A10VSO 45	65	p [bar]				**60**	**81**	**111**	**137**	**162**	**222**	**280**			
			Size				250	250	250	250|400	250|400	400|630	400|630			
	A10VSO 71	102	p [bar]						**72**	**89**	**106**	**144**	**178**	**220**	**280**	
			Size						400	400	400	400|630	400|630	400|630	630	
	A10VSO 100	145	p [bar]							**61**	**73**	**99**	**136**	**170**	**205**	**280**
			Size							400	400	400|630	400|630	400|630	630	630
	A10VSO 140	203	p [bar]											**119**	**146**	**200**
			Size											630	630	630
with control pump and DFLR controller	A10VSO 45	65	p max [bar]				**280**									
			Size				250									
	A10VSO 71	102	p max [bar]					**280**	**280**	**280**						
			Size					400	400	400						
	A10VSO 100	145	p max [bar]							**280**	**280**					
			Size							400	400					

ABPAC hydraulic power unit configurations with Sytronix FCP 5020

Pumps						Motors					
	n_{max} = 3,000 (PGH); 3,600(PGF) rpm					4	5,5	7,5	11	15	P_{nom}[kW]
Typ	**Size**	p_{cont} [bar]	p_{max} [bar]	Q_{peff} [l/min]	Q_{max} [l/min]	4,000	4,000	4,000	3,800	3,800	n_{max} [rpm]
PGF2 Tank Size	8.0	210	250	19	29	**139** 100					p_{eff} [bar] (without efficiency)
PGF2 Tank Size	13.0	210	250	31	47		**119** 100|160				
PGF2 Tank Size	19.0	210	250	46	68		**84** 160	**114** 160|250			
PGH2 Tank Size	8.0	315	350	19	24	**143** 100	**198** 100	**269** 100			
PGH3 Tank Size	13.0	315	350	31	39	**88** 100|160	**122** 100|160	**166** 100|160	**244** 160		
PGH4 Tank Size	20.0	315	350	48	60		**79** 160	**108** 160|250	**158** 160|250	**216** 160|250	
PGH4 Tank Size	32.0	315	350	77	98				**99** 250	**135** 250|400	
PGH4 Tank Size	50.0	250	310	120	152					**86** 400	

Reduced delivery times due to online configuration and standard components

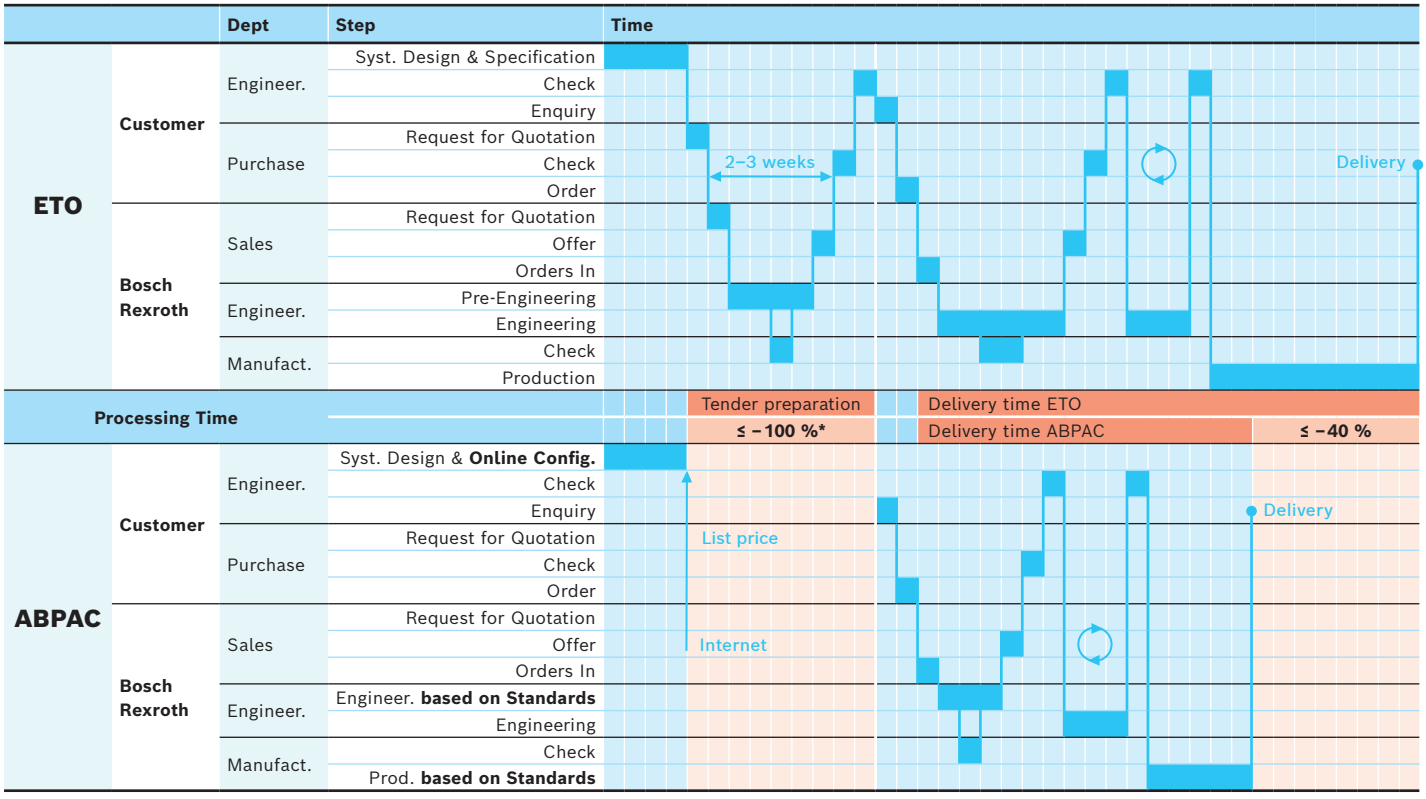

* In case of special requests, processing time extends accordingly

rexroth
A Bosch Company

Bosch Rexroth AG
Zum Eisengießer 1
97816 Lohr, Germany
www.boschrexroth.com/abpac

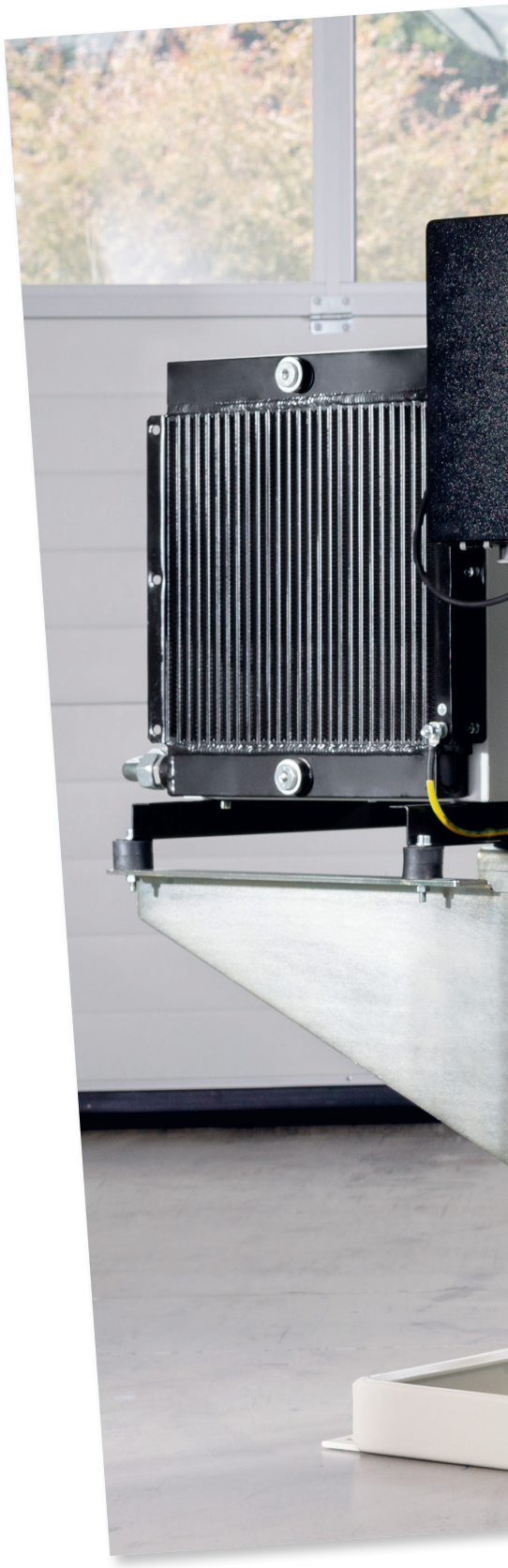

© This document as well as the data, specifications, and other information set forth in it are the exclusive property of Bosch Rexroth AG.
Reproduction or dissemination to third parties is not permitted without its consent.

The data specified above only serve to describe the product.
Due to the continuing development of our products, no statements concerning a certain condition or suitability for a certain application can be derived from our information. The information given does not release the user from the obligation of own judgment and verification. It must be remembered that our products are subject to a natural process of wear and aging.

R999001209 (2024-0)
© Bosch Rexroth AG 2019
Subject to revisions!