Electric Drives and Controls | Hydraulics | Linear Motion and Assembly Technologies | Pneumatics | Service

Rexroth
Bosch Group

Explosion-proof hydraulic valves, Type 4WS2EM 10...XD5-100

RE 29583-XD5-100-B0/05.14

Operating instructions

Rexroth
Bosch Group

Explosion-proof hydraulic products

RE 07010-XD5-100-B1/05.14

Operating Instructions

for explosion-proof
control valves
continuous valves

For potentially explosive atmospheres

Operating Instructions
Part I General Information

What you need to know about these Operating Instructions

These operating instructions apply to Rexroth explosion-proof hydraulic products and consist of the following three parts:

Part I General Information 07010-XD5-100-B1
Part II Data Sheet
Part III Product-specific instructions

For further information on the correct use of Rexroth hydraulic products please refer to our publication *General product information on hydraulic products, 07008.*

Contents

		Page
1	**Important basic information**	**2**
1.1	Conventions used in this product information document	2
2	**Responsibilities**	**3**
2.1	Liability, warranty, guarantee	3
2.2	Operator/user responsibilities	3
2.3	Copyright	3
3	**Important basic safety instructions**	**4**
3.1	Requirements of personnel, duty of care	4
3.2	Ancillary dangers and protective measures	5
3.3	Proper use	6
3.4	Improper use	6
3.5	Disposal	6

1 Important basic information

1.1 Conventions used in this product information document

Cross-references are printed in *italics*.

⚠ DANGER

This symbol indicates a threat of danger which will result directly in death or very serious injury if not avoided.

⚠ WARNING

This symbol indicates a threat of danger which may result in death or very serious injury if not avoided.

⚠ CAUTION

This symbol indicates possible danger which may lead to minor or serious injury and/or material damage.

IMPORTANT

This symbol indicates additional information.

2 Responsibilities

2.1 Liability, warranty, guarantee

Bosch Rexroth AG shall not be liable for damages resulting from these Operating Instructions not being adhered to or not being adhered to in full.

Unauthorised tampering shall render the warranty null and void.

Bosch Rexroth shall only be liable if the scope of delivery was shown to be defective. Bosch Rexroth shall not be liable if a deficiency occurs that involves parts that are replaced by the customer with equivalent but not identical parts as specified by the manufacturer.

Please refer to our general terms of supply or your contract for details of the guarantee and manufacturer's warranty.

2.2 Operator/user responsibilities

Mineral-oil-based pressure fluid is hazardous to water and flammable.

It may be used only if the relevant safety datasheet from the manufacturer is available and all the measures stipulated therein have been implemented.

If there is a risk of fluid leaking from the hydraulic product and contaminating water or the ground, the hydraulic product in question must be placed in a suitable collecting trough.

The operator is responsible for ensuring that

- the hydraulic product is used only in accordance with the proper use as defined in these Operating Instructions;
- the hydraulic product is used only in accordance with the technical data, as well as the ambient and operating conditions indicated in these Operating Instructions, and in particular that the limiting values given in the *Data Sheet* are not exceeded;
- the applicable rules, regulations, and directives on explosion protection are complied with.

If the hydraulic product is part of another product, e.g. a hydraulic system, then the person or organisation responsible for this other product (e.g. the designer/constructor of the system) shall ensure that

- the hydraulic product is used only in accordance with the proper use as defined in these Operating Instructions;
- the hydraulic product is used only in such a manner that the technical data, as well as the ambient and operating conditions indicated in these Operating Instructions, are complied with, and in particular that the limiting values given in the *Data Sheet* are not exceeded as far as anyone can judge and are in compliance with its user's manual;
- the applicable regulations and directives on explosion protection are complied with.

2.3 Copyright

This product information may only be reproduced – electronically or mechanically, in whole or in part – with the express permission of Bosch Rexroth AG. Similarly, it may not be distributed, amended, transmitted, translated into another language, or employed or copied for other purposes or by other parties without such consent.

3 Important basic safety instructions

3.1 Requirements of personnel, duty of care

3.1.1 General requirements, qualifications

Persons under the age of 18 who are currently receiving instruction or training or are working under supervision may not work on Rexroth hydraulic products.

This does not apply to young persons of 16 or over if

- working on Rexroth hydraulic products is necessary in order for them to accomplish their training objective;
- their protection is guaranteed through the supervision of an experienced, specialist member of staff;
- they are only allowed to use tools, equipment, and protective gear that preclude the risk of injury.

Specialist personnel are those who, using their specialist training, knowledge, and experience as well as familiarity with the relevant conditions, can recognise possible dangers and undertake the necessary measures to eliminate possible accidents.

3.1.2 Requirements of maintenance personnel

It may be necessary to carry out maintenance tasks on the hydraulic product in order to keep it in proper working order. For details, please refer to *Part III, Product-specific Instructions*. Maintenance tasks include the inspection, servicing, and repair of hydraulic and electrical components. Personnel carrying out these various tasks must have certain minimum qualifications.

For the inspection of the hydraulic components, personnel must fulfil the following requirements:

- They must be instructed about the tasks.
- Specialist knowledge of hydraulics is not required.

For the servicing of the hydraulic components, personnel must fulfil the following requirements:

- They have been instructed in the relevant activity.
- Specialist knowledge of hydraulics is not required to carry out servicing work.

For the maintenance of the hydraulic components, personnel must fulfil the following requirements:

- They must be hydraulics experts instructed in the tasks as defined above.
- They must be familiar with the function of the hydraulic system as a whole, from subsystems to their interaction with the function of the machine as a whole.
- They must be able to read hydraulic circuit diagrams, interpret individual functions from their symbols, and understand function diagrams.
- They must possess knowledge of the function and construction of hydraulic elements.

The following applies to work on the electrical systems:

All work on electrical equipment may only be carried out by an authorised, qualified electrician, or by instructed persons under the guidance and supervision of an authorised qualified electrician, in accordance with the rules applicable to electro-technical products.

3.2 Ancillary dangers and protective measures

⚠ DANGER

Danger zone	Ancillary danger	Protective measure(s), safety instructions
Connections and pressure lines (pipes and conduits)	Risk of injury or loss of life from sprayed pressure fluid under high pressure during maintenance work.	Depressurise hydraulic system before starting maintenance work. Relieve any accumulators of pressure. Rectify leaks immediately.
Surfaces of components and pressure lines	Risk of burning due to high surface temperatures	Allow hydraulic parts to cool before commencing maintenance work. Wear protective clothing.
Electrical components	Electric shock Loss of explosion protection	Work on electrical components only in a non-powered state. Switch electrical connections off before assembly and disassembly work begins. All tasks that require product components to be dismantled may be performed only within the scope given in *Part III*, *Product-specific instructions*.
	Failure caused by excessive moisture penetration following cleaning with a high pressure cleaner	Shield the hydraulic product from the direct effect of high pressure water jets.

Handling pressure fluid without protection is hazardous to your health.

Please observe the manufacturer's *safety instructions* for the pressure fluid used and the associated *Safety Data Sheet*.

⚠ CAUTION

Danger zone	Ancillary danger	Protective measure(s), safety instructions
Connections and pressure lines (pipes and conduits)	Water or ground pollution due to leakage	Collecting trough. Rectify leaks immediately.

IMPORTANT

See also *2.2 Operator/user responsibilities.*

3.3 Proper use

Your hydraulic product has been conceived and designed for the transmission, open-loop control, or closed-loop control of energy and signals with the aid of the flow of oil.

However, only by carefully observing this user's manual can accidents be prevented and the problem-free operation of your Bosch Rexroth hydraulic product be guaranteed.

Store the hydraulic product only in a dry, dust-free environment that is free of corrosive agents and vapours, has a low moisture content, and undergoes no large variations in temperature. We recommend the use of clean conservation oil for storage periods longer than six months.

IMPORTANT

The factory-applied corrosion protection is adequate for storage under the conditions given above, provided that no condensation or leaked water can penetrate the hydraulic product.

The hydraulic product is only to be used with the operating fluids listed in the *Data Sheet*. Information on using products with different pressure fluids is available on request.

Use the hydraulic product only if it is in perfect technical condition and only in accordance with the proper use as defined in these Operating Instructions. The connections, operating conditions and performance data defined in these Operating Instructions must not be changed.

IMPORTANT

Please contact Bosch Rexroth AG first should you wish to use the hydraulic product under other connection, usage, or performance data than those specified by Bosch Rexroth AG in these operating instructions. The hydraulic product may not be used with any other connection, usage, or performance data other than those described in these operating instructions without written permission from Bosch Rexroth AG.

The hydraulic product must only be converted within the scope given in *Part III*, *Product-specific Instructions*.

During setting up or maintenance work, the safety devices fitted by Bosch Rexroth AG must be present, properly installed, and in full working order, unless this is impossible. They must not be relocated, bypassed, or rendered ineffective.

Rexroth hydraulic products must never be operated or maintained by persons under the influence of alcohol, drugs, or other medication which can affect one's ability to react.

3.4 Improper use

⚠ DANGER

Modifications to the product are only permitted within the scope given in *Part III*, *Product-specific Instructions*.

The hydraulic product is pre-coated at the factory with a surface protection ready for service. This surface protection must not normally be altered – through the application of paint, for example – as this would render the explosion protection ineffective. Should, by way of exception, alteration to the surface protection be permitted, this will be expressly stipulated in *Part III, Product-specific Instructions.* Please observe the limitations specified here, where applicable.

3.5 Disposal

- Empty the hydraulic product and dispose of it as scrap metal.
- Collect residual oil and dispose of it in accordance with the instructions in the safety datasheet for hydraulic fluids.
- Dispose of any electronic components properly and in accordance with applicable regulations.

Bosch Rexroth AG
Hydraulics
Zum Eisengießer 1
97816 Lohr am Main, Germany
Telefon +49 (0) 93 52 / 18-0
documentation@boschrexroth.de
www.boschrexroth.de

© This document, as well as the data, specifications and other information set forth in it, are the exclusive property of Bosch Rexroth AG. It may not be reproduced or given to third parties without its consent.

The data specified above only serve to describe the product.
No statements concerning a certain condition or suitability for a certain application can be derived from our information. The given information does not release the user from the obligation of own judgement and verification. It must be remembered that our products are subject to a natural process of wear and aging.

Rexroth
Bosch Group

4/3 directional servo valve with mechanical position feedback

RE 29583-XD5-100-B2/05.14
Replaces: 04.12

Type 4WS2EM 10...XD5...-100

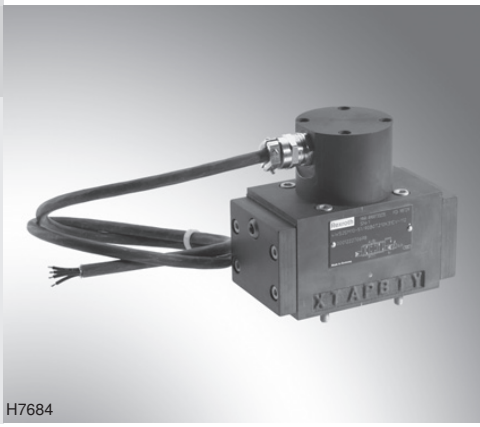

Size 10
Component series 5X
Maximum operating pressure 315 bar
Maximum flow 180 l/min

For explosive areas

Part II Data sheet

Information on the explosion protection:

- Type of protection: Ex d IIB T4 Gb according to IEC 60079-0:2011 / IEC 60079-1:2007
- Ambient temperature range –30 °C ≤ T_a ≤ +80 °C

What you need to know about these operating instructions

These operating instructions apply to the explosion-proof version of Rexroth valves and consist of the following three parts:

Part I	General information 07010-XD5-B1	**Operating instructions 29583-XD5-100-B0**
Part II	Data sheet 29583-XD5-100-B2	
Part III	Product-specific instructions 29583-XD5-100-B3	

You can find further information on the correct handling of Rexroth hydraulic products in our publication "General product information on hydraulic products" 07008.

Table of contents

Contents	Page
Features	2
Ordering code and scope of delivery	3
Symbol	3
Function, section	4
Technical data	5
External control electronics	6
Electrical connection	7
Characteristic curves	8
Unit dimensions	12
Flushing plate	13

Features

- Directional servo valve
- Valve to control position, force, pressure or velocity
- 2-stage servo valve in 4-way version with mechanical feedback
- 1st stage as nozzle flapper plate amplifier
- For subplate mounting,
  porting pattern according to ISO 4401-05-05-0-05
  with ports X and Y
  Subplates available in FE/ZN version (see page 12)
- Dry control motor, no contamination of the solenoid gaps by the hydraulic fluid
- Wear-free control spool return element
- Control:
  External control electronics in Euro-card format or in modular design (separate order, see page 6)
- Valve is adjusted and tested
- Internal/external pilot oil supply and return can be ordered individually
- Control spool with flow force compensation
- Control sleeve centrically fixed, thus low susceptibility to temperature and pressure
- Pressure chambers at the control sleeve with gap seal, therefore no wear of the seal ring
- Filter for 1st stage freely accessible from the outside

Ordering code and scope of delivery

4WS2E	M	10–5X/		B	11	XD5			C		V–100

Electrically operated 2-stage servo valve in 4/3 directional design for **external** control electronics

Mechanical feedback **= M**

Size 10 **= 10**

Component series 50 to 59 **= 5X**
(50 to 59: Unchanged installation and connection dimensions)

Rated flow [1]

5 l/min	**= 5**
10 l/min	**= 10**
20 l/min	**= 20**
30 l/min	**= 30**
45 l/min	**= 45**
60 l/min	**= 60**
75 l/min	**= 75**
90 l/min	**= 90**

Valve for **external** control electronics
Coil no. 11 (30 mA/85 Ω per coil) [2] **= 11**

100 = Special number [6]

Seal material
V = FKM seals
Suitable for mineral oil (HL, HLP) according to DIN 51524

Control spool overlap [5]
E = 0 … 0.5 % negative
D = 0 … 0.5 % positive

Electrical connection
C = Cable connection, see page 7

Inlet pressure range to the 1st stage [4]
210 = 10 … 210 bar
315 = 10 … 315 bar

Pilot oil supply and return [3]
– = Supply external, return external
E = Supply internal, return external
T = Supply external, return internal
ET = Supply internal, return internal
(ET = standard version)

XD5 = Explosion protection “flameproof enclosure”
For details see information on the explosion protection, page 6

Included in the scope of delivery:

- Valve mounting screws
- Valve operating instructions with declaration of conformity in part III

[1] **Rated flow**

The rated flow refers to a 100 % command value signal at 70 bar valve pressure differential (35 bar per control edge). The valve pressure differential must be regarded as reference. Other values result in the flow being changed. A possible rated flow tolerance of ±10 % must be taken into account (see flow signal function page 8).

[2] **External control electronics**

The actuating signal must be created from a flow-controlled output stage with a superimposed dither signal.
Control electronics (servo amplifier) see page 6.

[3] **Pilot oil**

Care should be taken that the pilot pressure is as constant as possible. An external pilot control via port X is thus often advantageous. The valve can be operated with a higher pressure at X than at P in order to influence the dynamics in a positive form.

Important:
The ports X and Y are also pressurized in case of "internal" pilot oil supply and return.

[4] **Inlet pressure range**

Care should be taken that the system pressure is as constant as possible. Pilot pressure range: 10 … 210 bar or 10 … 315 bar

With regard to the dynamics, the frequency response dependency must be observed within the admissible pressure range.

[5] **Control spool overlap**

The control spool overlap is specified in % of the control spool stroke. Others upon request

[6] **Special number “100”**

Without actuation (de-energized condition), channels P → B and A → T are open for 10 % of the nominal quantity.

Symbol

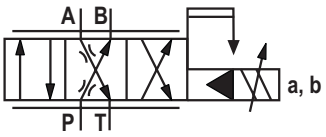

Function, section

4WS2EM 10…XD5...-100

Valves of this type are electrically operated, 2-stage directional servo valves with porting pattern according to ISO 4401-05-05-0-05. They are mainly used to control position, force, pressure or velocity.

These valves are made of an electro-mechanical converter (torque motor) (1), a hydraulic amplifier (principle: nozzle flapper plate) (2) and a control spool (3) in a sleeve (2nd stage) which is connected with the torque motor via a mechanical feedback.

An electrical input signal at the coils (4) of the torque motor generates a force by means of a permanent magnet which acts on the armature (5), and in connection with a torque tube (6) results in a torque. This causes the flapper plate (7) which is connected to the torque tube (6) via a pin to move from the central position between the two control nozzles (8), and a pressure differential is created across the front faces of the control spool (3). The pressure differential results in the control spool changing its position, which results in the pressure port being connected to one actuator port and, at the same time, the other actuator port being connected to the return flow port.

The control spool is connected to the flapper plate or the torque motor by means of a bending spring (mechanical feedback) (9). The position of the control spool is changed until the feedback torque across the bending spring and the electro-magnetic torque of the torque motor are balanced and the pressure differential at the nozzle flapper plate system becomes zero.

The stroke of the control spool and consequently the flow of the servo valve are controlled in proportion to the electrical input signal. It must be noted that the flow depends on the valve pressure drop.

External control electronics (separate order)

External control electronics (servo amplifier) serve the actuation of the valve, amplifying an analog input signal (command value) so that with the output signal, the servo valve is actuated in a flow-controlled form.

Type 4WS2EM 10…XD5...-100

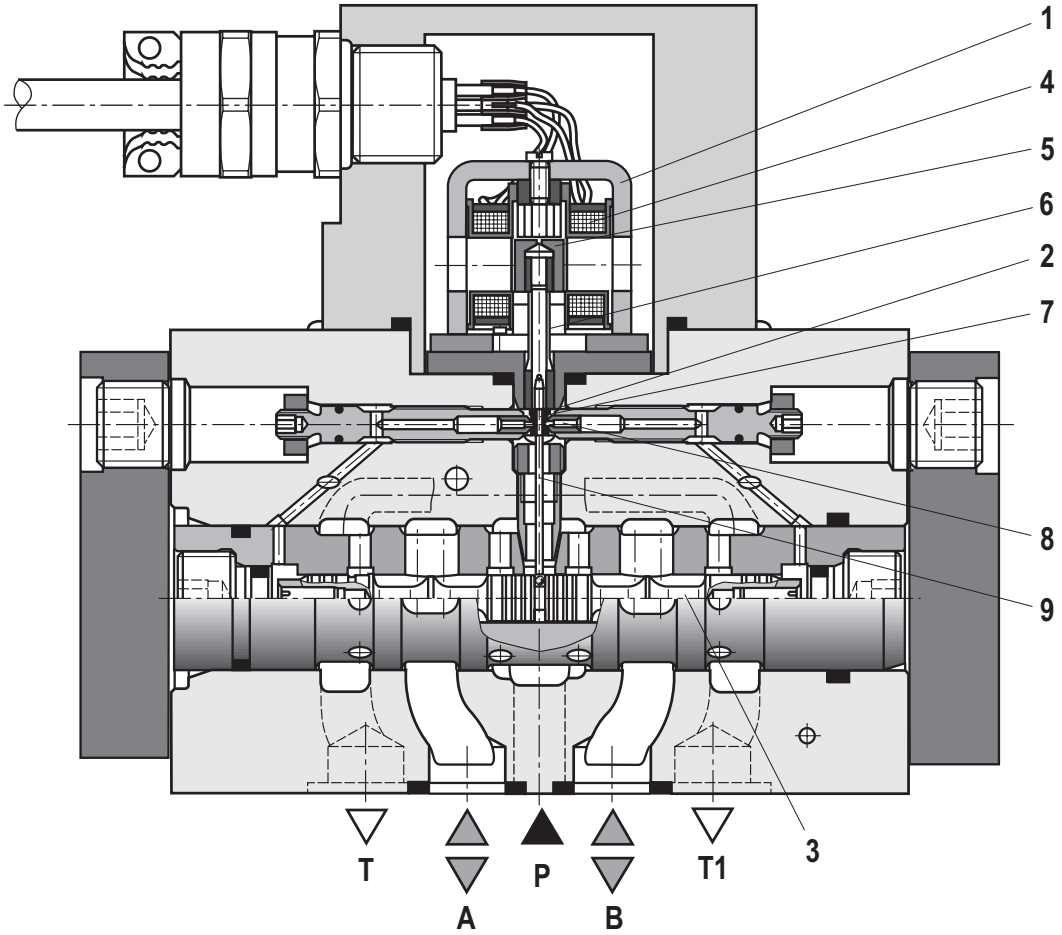

Technical data

general

Porting pattern		ISO 4401-05-05-0-05
Installation position		Any (ensure that during start-up of the system, the pilot control is supplied with sufficient pressure (≥ 10 bar)!)
Surface protection		Nitro-carburated
Storage temperature range	°C	–20 … +80
Ambient temperature range	°C	–30 … +80
Weight	kg	3.97

hydraulic (measured with HLP 32, ϑ_{oil} = 40 °C ± 5 °C)

Operating pressure	Pilot control stage, pilot oil supply	bar	10 … 210 or 10 … 315
	Main valve, ports P, A, B	bar	up to 315
Return flow pressure	Port T		
	Pilot oil return internal	bar	Pressure peaks < 100 permitted, static < 10
	Pilot oil return external	bar	Up to 315
	Port Y	bar	Pressure peaks < 100 permitted, static < 10
Hydraulic fluid			Mineral oil (HL, HLP) according to DIN 51524 Ignition temperature > 150 °C
Hydraulic fluid temperature range		°C	–20 ... +80; preferably +40 ... +50
Viscosity range		mm^2/s	15 ... 380; preferably 30 ... 45
Maximum admissible degree of contamination of the hydraulic fluid, cleanliness class according to ISO 4406 (c)			Class 18/16/13 [1]

Zero flow $q_{V,L}$ [2] with control spool overlap E measured without dither signal	l/min	$\sqrt{\frac{p_P}{70\ bar}}\cdot 0.7\frac{l}{min}$ [4]	$\sqrt{\frac{p_P}{70\ bar}}\cdot 0.9\frac{l}{min}$ [4]	$\sqrt{\frac{p_P}{70\ bar}}\cdot 1.2\frac{l}{min}$ [4]			$\sqrt{\frac{p_P}{70\ bar}}\cdot 1.5\frac{l}{min}$ [4]		$\sqrt{\frac{p_P}{70\ bar}}\cdot 1.7\frac{l}{min}$ [4]
Rated flows $q_{v\ rated}$ [3], tolerance ±10 % with valve pressure differential Δp = 70 bar (35 bar/edge)	l/min	5	10	20	30	45	60	75	90
Max. control spool stroke possible with mechanical end position (in case of error) related to nominal stroke	%	120 … 170				120 … 150			

Feedback system		Mechanical		
Hysteresis (dither-optimized)	%	≤ 1.5		
Range of inversion (dither-optimized)	%	≤ 0.3		
Response sensitivity (dither-optimized)	%	≤ 0.2		
Pressure gain with 1 % control spool stroke change (from the hydraulic zero point)	% of p_P [4]	≥ 30	≥ 60	≥ 80
Zero adjustment flow over the entire operating pressure range	%	≤ 3, long-term ≤ 5		
Zero shift upon change of:				
Hydraulic fluid temperature	% / 20 K	≤ 1		
Ambient temperature	% / 20 K	≤ 1		
Operating pressure 80 … 120 % of p_P [4]	% / 100 bar	≤ 2		
Return flow pressure 0 … 10 % of p_P [4]	% / bar	≤ 1		

[1] The cleanliness classes specified for the components must be adhered to in hydraulic systems. Effective filtration prevents faults and at the same time increases the service life of the components.

For the selection of the filters see www.boschrexroth.com/filter.

[2] $q_{V,L}$ = zero flow in l/min

[3] $q_{v\ rated}$ = rated flow in l/min

[4] p_P = operating pressure in bar

Technical data

electric

Protection class according to EN 60529			IP 65
Type of signal			Analog
Rated current per coil		mA	30
Resistance per coil		Ω	85
Inductivity with 60 Hz and 100 % rated current	Serial connection	H	1.0
	Parallel connection	H	0.25
In case of actuation using non-Rexroth amplifiers, we recommend a superimposed dither signal.			

Information on the explosion protection

KCs examination certificate			14-KB4BO-0119X
IECEx Certificate of Conformity			IECEx BVS 13.0120 X
Type of protection according to IEC 60079-0:2011 / IEC 60079-1:2007			Ex d IIB T4 Gb
Ambient temperature range		°C	–30 … +80
Hydraulic fluid temperature range		°C	–20 … +80
Maximum current per coil	I_{max}	mA	100
Conditions for use			⚠ **DANGER – Risk of explosion** For ensuring the type of protection "flameproof enclosure" the occurrence of explosive atmospheres in the hydraulic area of the valve must be securely avoided. This may be ensured by applying a sufficiently high control pressure (≥ 10 bar in channel P and/or X) before applying an electrical signal at the coils or the electronics.

External control electronics

Servo amplifier (separate order)	Euro-card format [1]	Analog	Type VT-SR2-1X/.60 according to data sheet 29980
	Modular design [1]	Analog	Type VT 11021 according to data sheet 29743

⚠ **DANGER – Risk of explosion**

– The external servo amplifier must be operated outside the explosive area!

[1] Order separately

Electrical connection

Example: Parallel connection

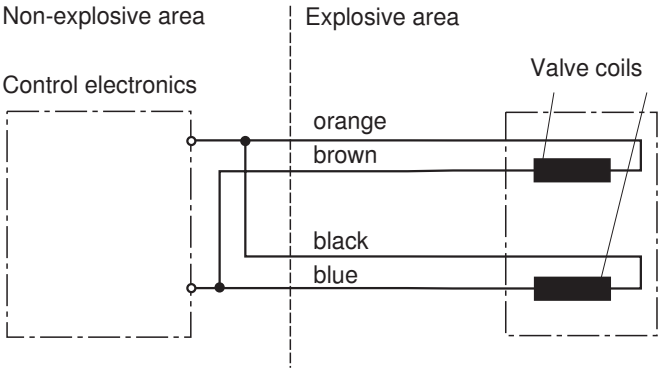

⚠ DANGER – Risk of explosion

The free end of the connection cable must be connected as follows according to the construction provisions:

- **Outside the explosive area**

  or
- **Within the explosive area in terminal boxes of an acknowledged protection type**

The connection cable is 3 m long and fixedly attached to the valve.
It may be shortened.
It must not be exchanged.

The electrical connection can be designed as parallel or serial connection. For reasons of operational safety and the resulting lower coil inductivity, we recommend the parallel connection.

Parallel connection:
Connect the
"orange" cable litz with "black"
and
"brown" with "blue".

Serial connection:
Connect the "brown" cable litz with "black".

The electrical control to "orange" (+) and "blue" (–) provides for the flow direction P → A and B → T. Inverted electrical control provides for the flow direction P → B and A → T.

Characteristic curves (measured with HLP32, ϑ_{oil} = 40 °C ± 5 °C)

Flow/load function (tolerance ±10 %) with 100 % command value signal

Important:
Observe the flow values in the max. command value range (see tolerance field of the flow/signal function)

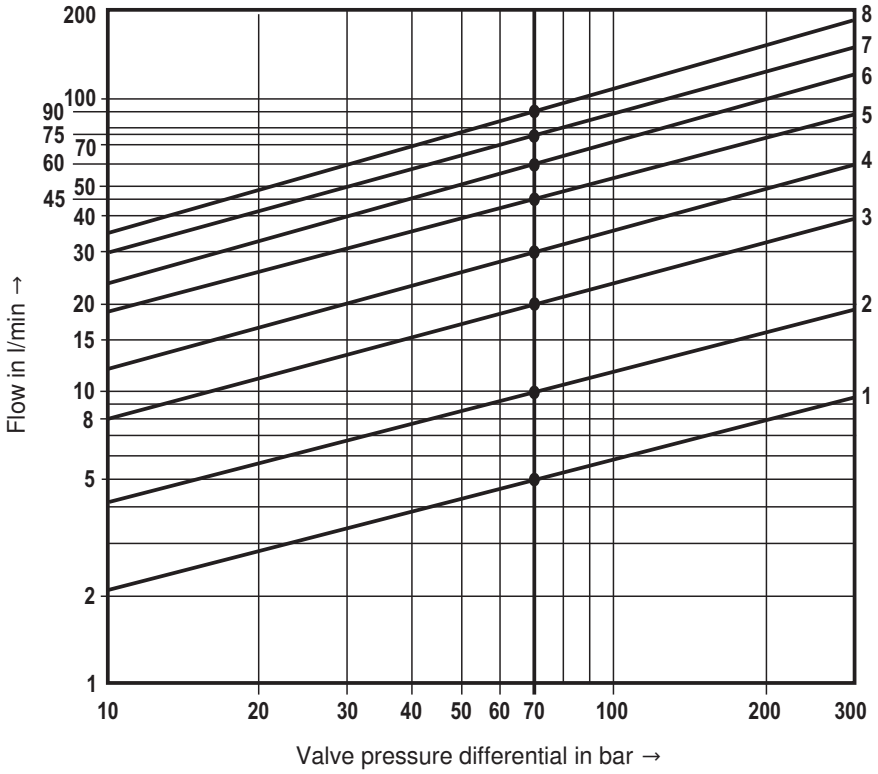

Ordering code	Rated flow	Curve
5	5 l/min	1
10	10 l/min	2
20	20 l/min	3
30	30 l/min	4
45	45 l/min	5
60	60 l/min	6
75	75 l/min	7
90	90 l/min	8

Δp = Valve pressure differential (inlet pressure p_P minus load pressure p_L minus return flow pressure p_T)

Tolerance field of the flow/signal function with constant valve pressure differential Δp

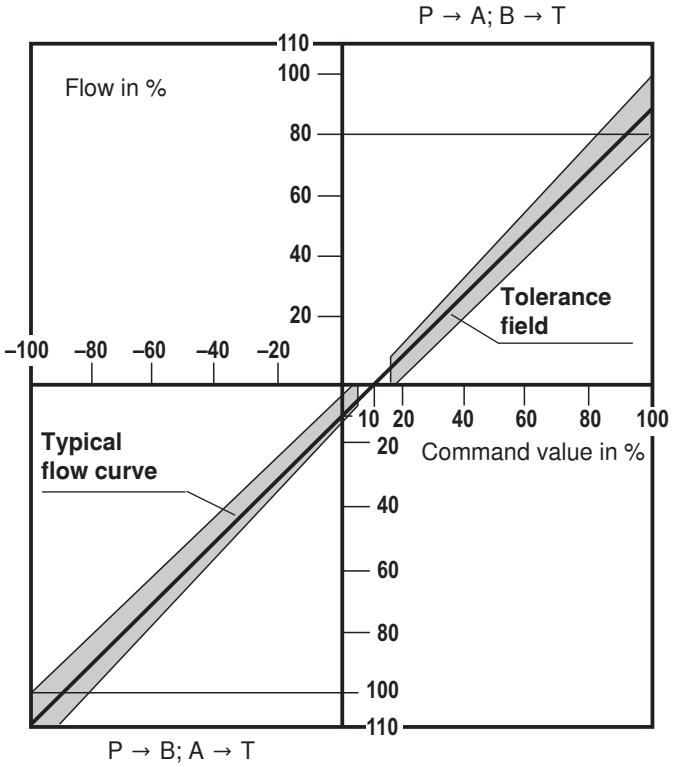

Characteristic curves (measured with HLP 32, ϑ_{oil} = 40 °C ± 5 °C)

Transition function with pressure rating 315 bar, step response without flow

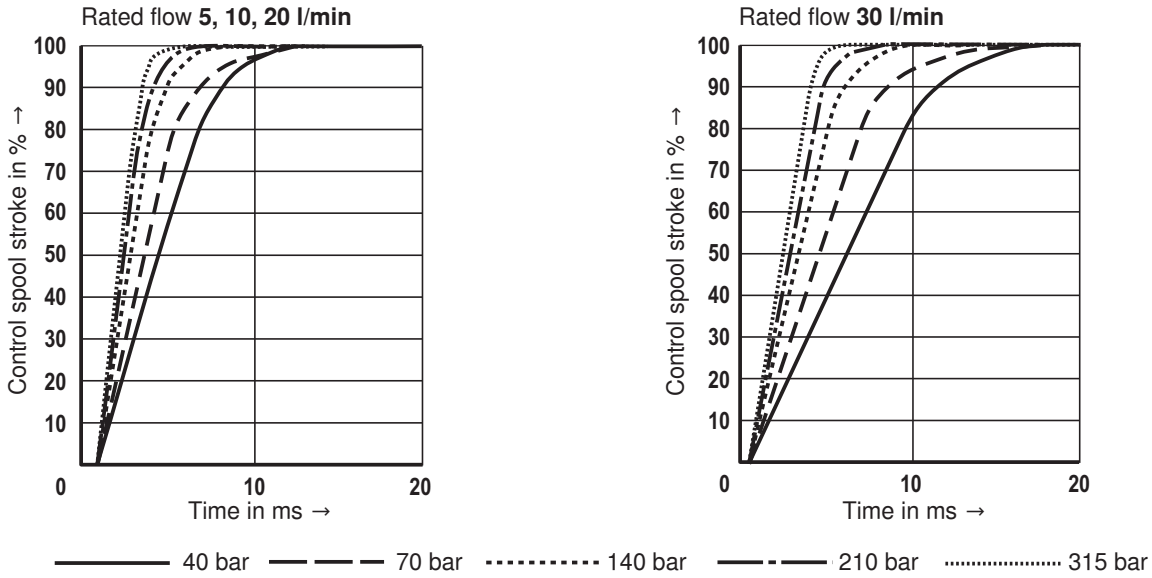

Frequency response with pressure rating 315 bar, stroke frequency without flow

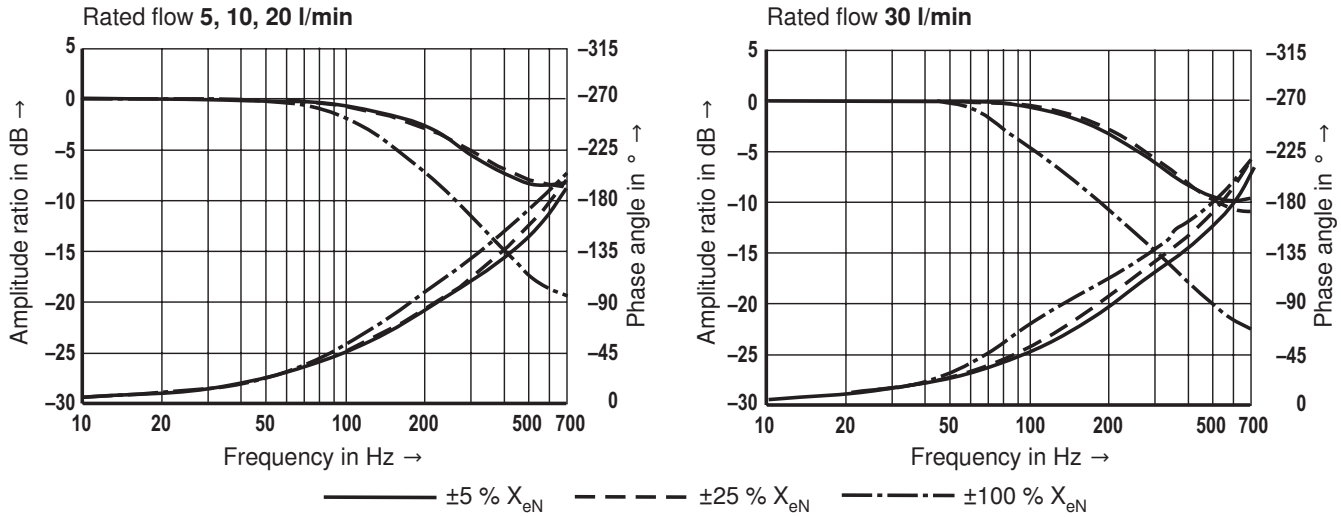

Dependency of the frequency *f* at –90 ° on the operating pressure *p* and the inlet amplitude

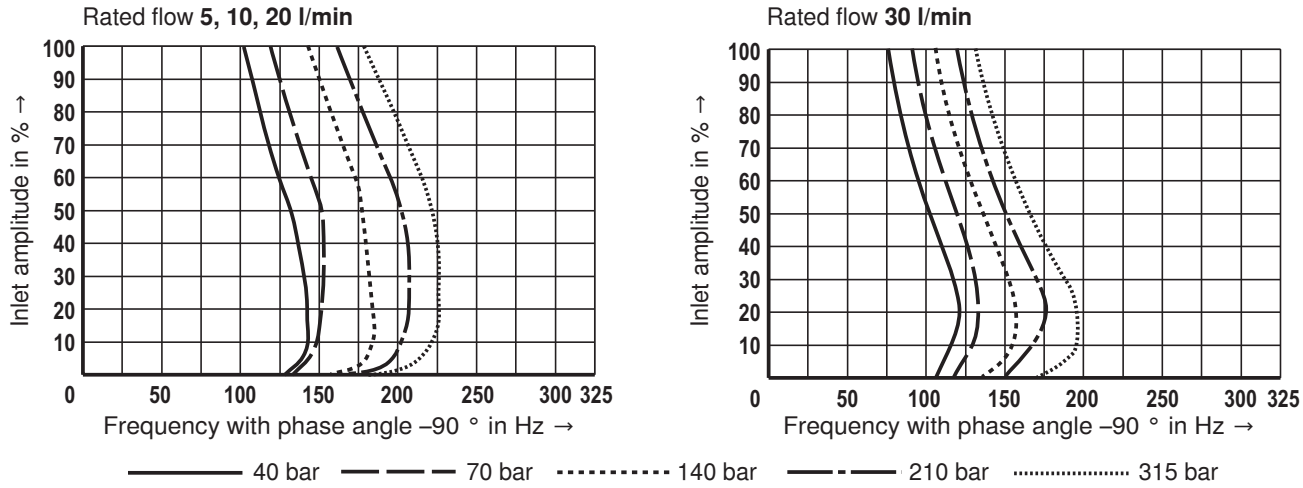

Characteristic curves (measured with HLP 32, ϑ_{oil} = 40 °C ± 5 °C)

Transition function with pressure rating 315 bar, step response without flow

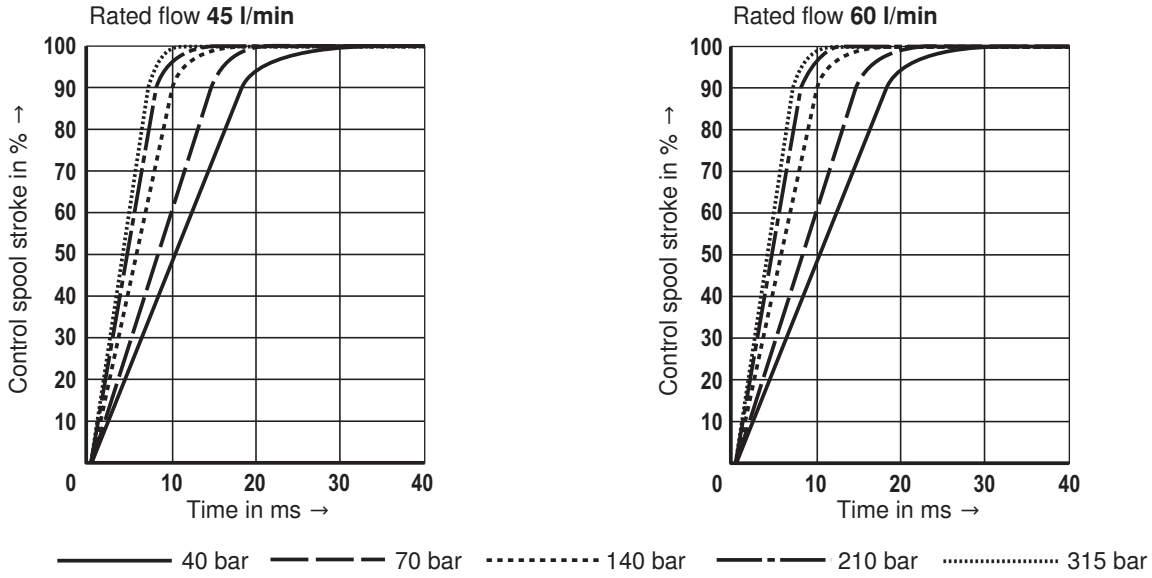

Frequency response with pressure rating 315 bar, stroke frequency without flow

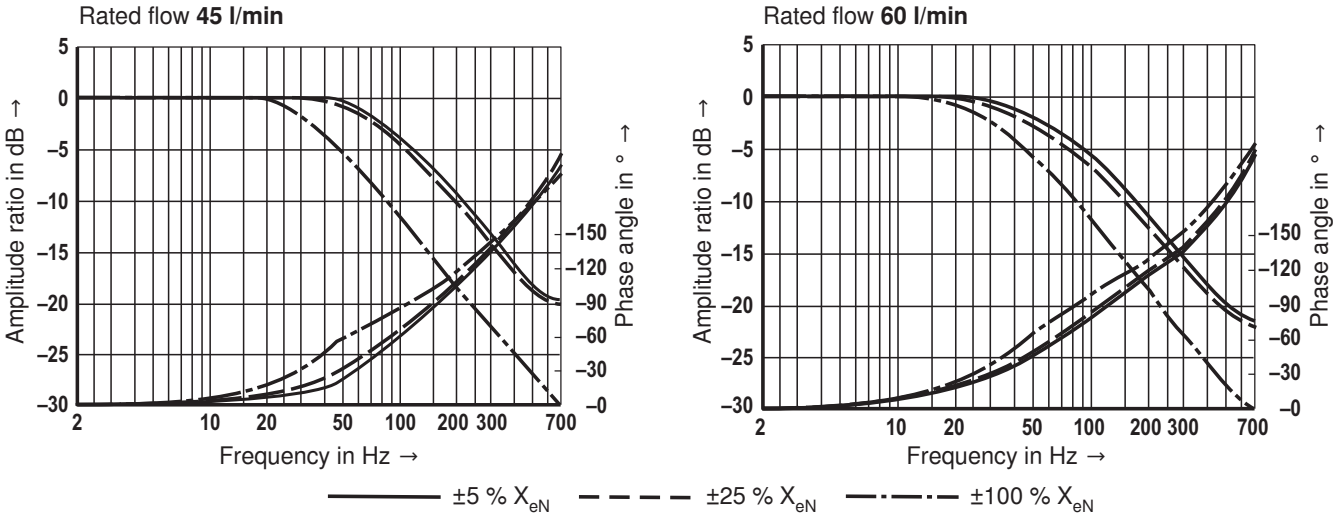

Dependency of the frequency f at –90 ° on the operating pressure p and the inlet amplitude

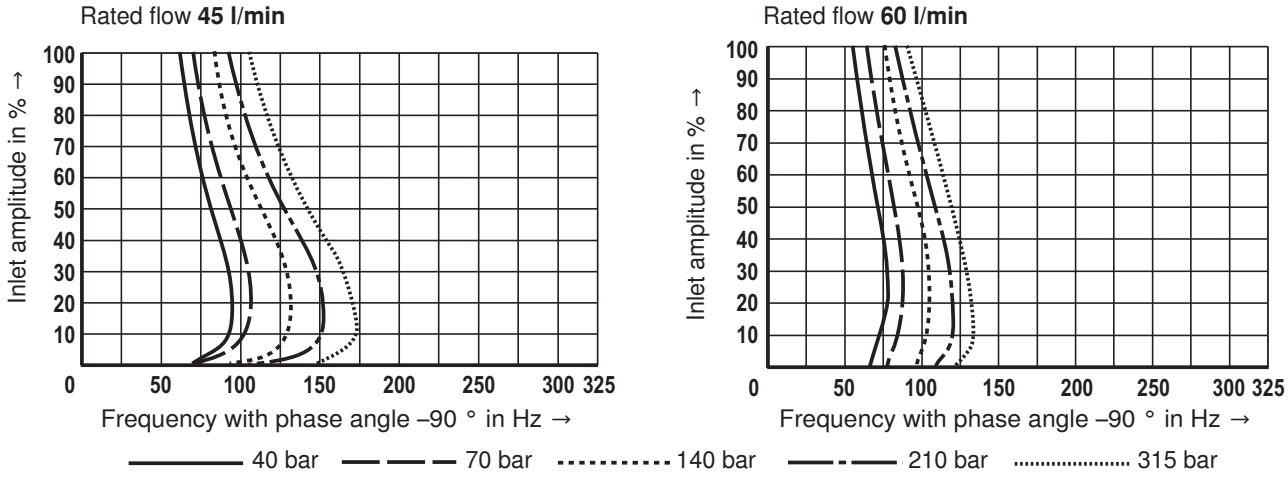

Characteristic curves (measured with HLP 32, ϑ_{oil} = 40 °C ± 5 °C)

Transition function with pressure rating 315 bar, step response without flow

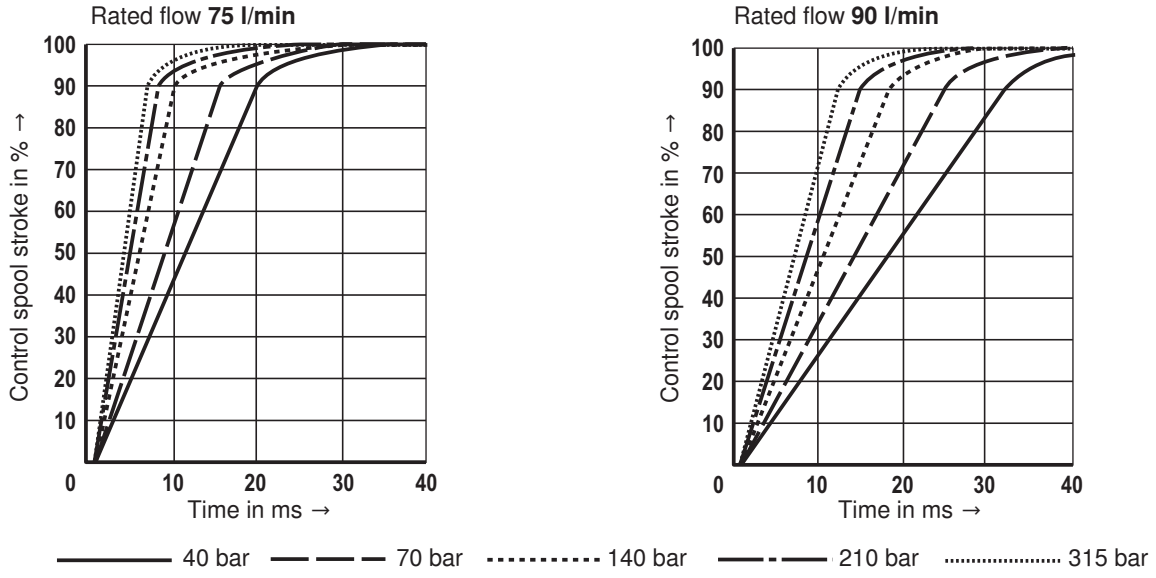

Frequency response with pressure rating 315 bar, stroke frequency without flow

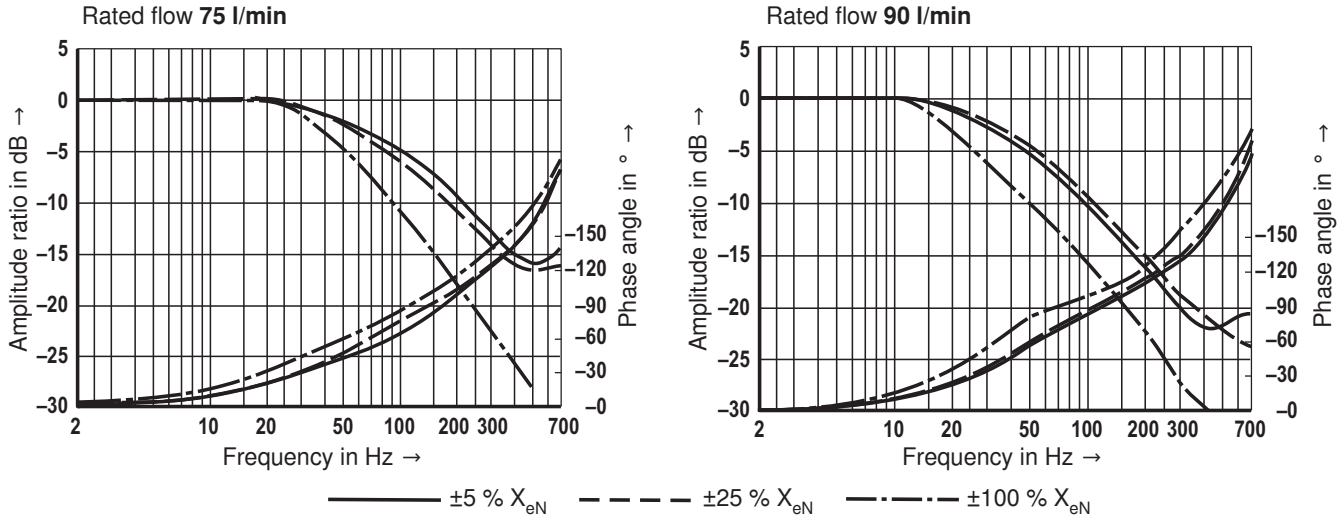

Dependency of the frequency f at –90 ° on the operating pressure p and the inlet amplitude

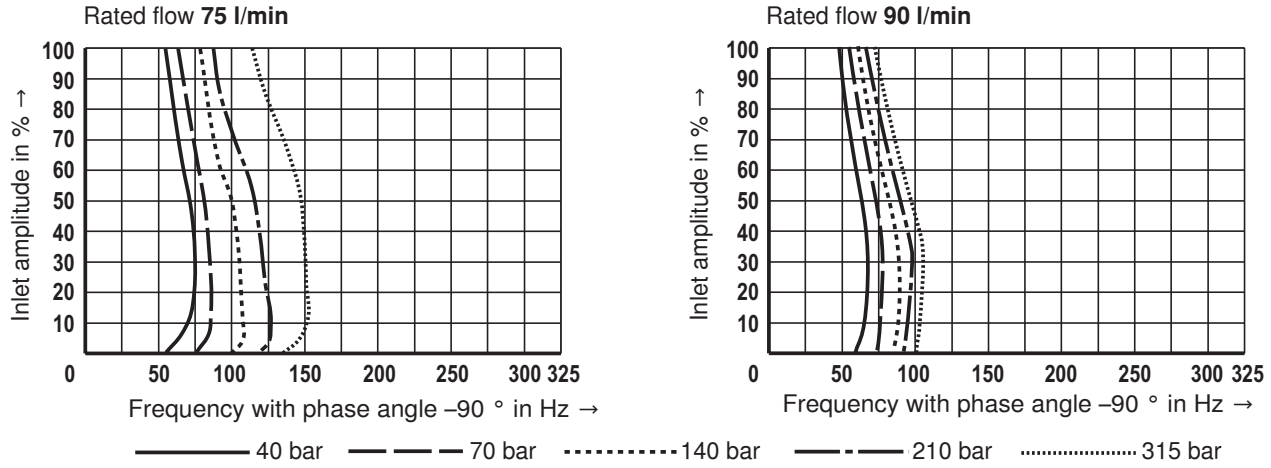

Unit dimensions (dimensions in mm)

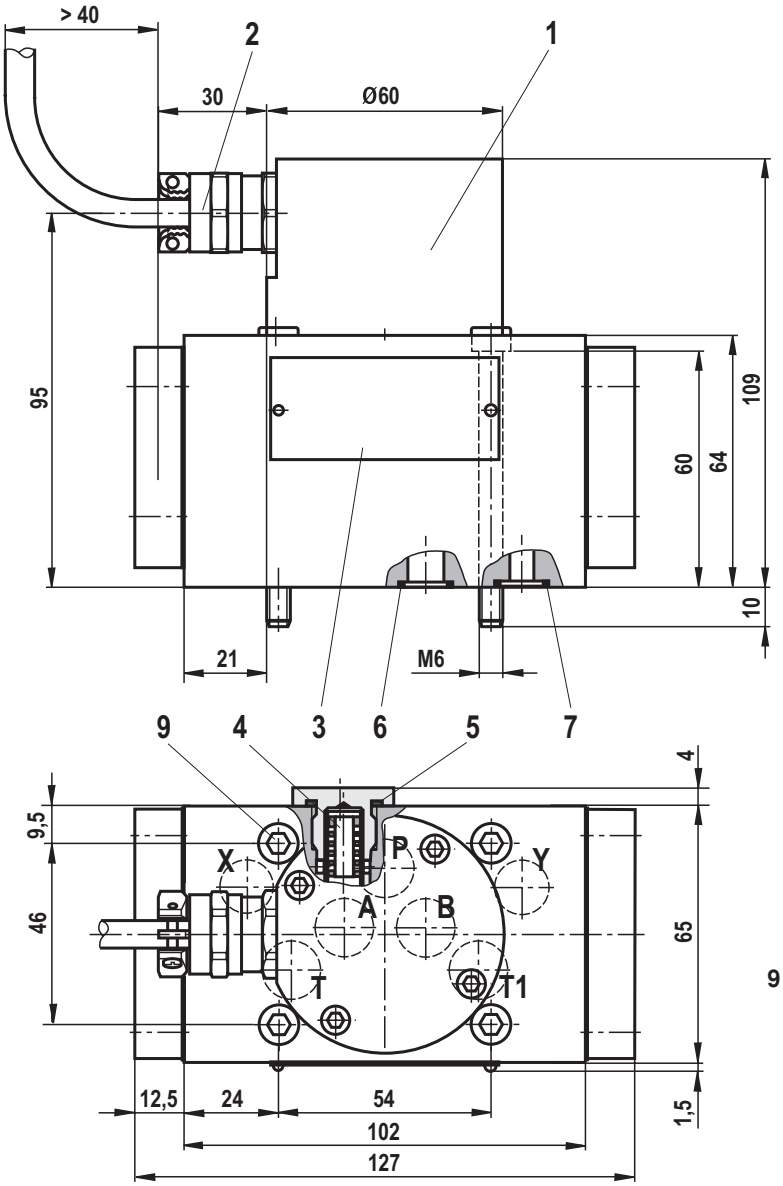

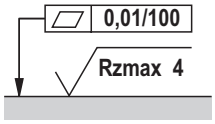

Required surface quality of the valve mounting face

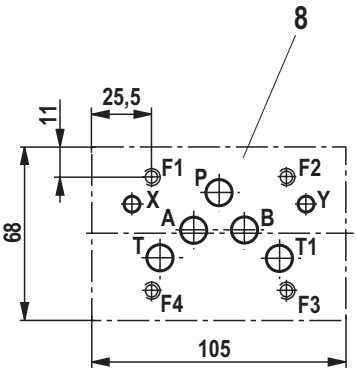

9 Valve mounting screws
For reasons of stability, exclusively use the following valve mounting screws:
4 hexagon socket head cap screws ISO 4762-M6x70-10.9-flZn-240h-L (friction coefficient 0.09 - 0.14 according to VDA 235-101)
(included in the scope of delivery)

1 Cap

2 Cable gland with cable 3 m long

3 Name plate

4 Exchangeable filter element
Material no.: **R961001950**

5 Profile seal for filter screw 16 x 1.5, part of item 4

6 Identical seal rings for ports P, A, B, T and T1

7 Ports X and Y are also pressurized in case of "internal" pilot oil supply and return.

8 Machined valve mounting face
Porting pattern according to ISO 4401-05-05-0-05
Port T1 is optional and is recommended for reducing the pressure drop from B → T with rated flows > 45 l/min.

Subplates

G 66/01 FE/ZN (G3/8)
G 67/01 FE/ZN (G1/2)

with ports X and Y:
G 535/01 FE/ZN (G3/4)
G 535/02 FE/ZN (M27 x 2)
G 536/01 FE/ZN (G1)
G 536/02 FE/ZN (M33 x 2)
with dimensions like in data sheet 45054 (must be ordered separately)

Flushing plate with porting pattern according to ISO 4401-05-05-0-05 (dimensions in mm)

Symbol

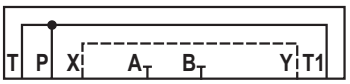

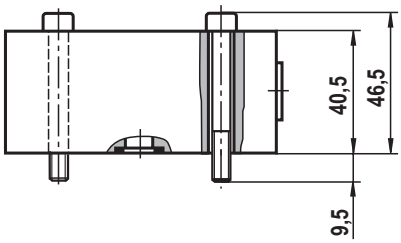

Ordering code and more information

- Material number: **R900912450**
- Weight: 2 kg
- Identical seal rings for ports P, A, B, T and T1
- Identical seal rings for ports X and Y
- Mounting screws
  For reasons of stability, exclusively use the following mounting screws:
  4 hexagon socket head cap screws
  ISO 4762-M6x50-10.9-flZn-240h-L
  (friction coefficient 0.09 - 0.14 according to VDA 235-101)
  (included in the scope of delivery)

Important

Before the assembly, observe the information in the Product-specific instructions 29583-XD5-100-B3, section 3.2.

Notes

Bosch Rexroth AG
Hydraulics
Zum Eisengießer 1
97816 Lohr am Main, Germany
Phone +49 (0) 93 52 / 18-0
documentation@boschrexroth.de
www.boschrexroth.de

© This document, as well as the data, specifications and other information set forth in it, are the exclusive property of Bosch Rexroth AG. It may not be reproduced or given to third parties without its consent.
The data specified above only serve to describe the product. No statements concerning a certain condition or suitability for a certain application can be derived from our information. The information given does not release the user from the obligation of own judgment and verification. It must be remembered that our products are subject to a natural process of wear and aging.

Notes

Bosch Rexroth AG
Hydraulics
Zum Eisengießer 1
97816 Lohr am Main, Germany
Phone +49 (0) 93 52 / 18-0
documentation@boschrexroth.de
www.boschrexroth.de

© This document, as well as the data, specifications and other information set forth in it, are the exclusive property of Bosch Rexroth AG. It may not be reproduced or given to third parties without its consent.
The data specified above only serve to describe the product. No statements concerning a certain condition or suitability for a certain application can be derived from our information. The information given does not release the user from the obligation of own judgment and verification. It must be remembered that our products are subject to a natural process of wear and aging.

Notes

Bosch Rexroth AG
Hydraulics
Zum Eisengießer 1
97816 Lohr am Main, Germany
Phone +49 (0) 93 52 / 18-0
documentation@boschrexroth.de
www.boschrexroth.de

© This document, as well as the data, specifications and other information set forth in it, are the exclusive property of Bosch Rexroth AG. It may not be reproduced or given to third parties without its consent.
The data specified above only serve to describe the product. No statements concerning a certain condition or suitability for a certain application can be derived from our information. The information given does not release the user from the obligation of own judgment and verification. It must be remembered that our products are subject to a natural process of wear and aging.

Rexroth
Bosch Group

RE 29583-XD5-100-B3/05.14

4/3 directional servo valve with mechanical position feedback

Type 4WS2EM 10...XD5...-100

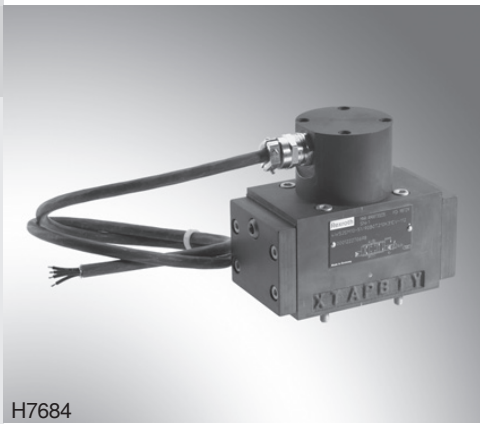

Size 10
Component series 5X
Maximum operating pressure 315 bar
Maximum flow 180 l/min

For explosive areas

Operating instructions
Part III Product-specific instructions

What you need to know about these operating instructions

These operating instructions apply to the explosion-proof version of Rexroth valves and consist of the following three parts:

Part I	General information 07010-XD5-B1	**Operating instructions 29583-XD5-100-B0**
Part II	Data sheet 29583-XD5-100-B2	
Part III	Product-specific instructions 29583-XD5-100-B3	

You can find further information on the correct handling of Rexroth hydraulic products in our publication "General product information on hydraulic products" 07008.

Contents Page

1	**Scope of delivery**	**2**
2	**Amending general safety instructions**	**3**
2.1	Information on the name plate	3
2.2	Special residual risks and protective measures	4
3	**Assembly and (initial) commissioning**	**5**
3.1	Safety instructions for assembly and (initial) commissioning	5
3.2	Before the assembly	5
3.3	Assembly	5
3.4	Initial commissioning, re-commissioning	6
4	**Disassembly**	**7**
5	**Troubleshooting**	**8**
6	**Inspection and maintenance**	**8**
7	**Repair and spare parts**	**9**
7.1	Safety instructions regarding repairs	9
7.2	Exchanging the filter element	9
7.3	Rectifying external leakages	9
7.4	Available spare parts	10
7.5	Contacts for repair and spare parts	10
8	**Accessories**	**10**
8.1	Available accessories	10
8.2	Address for ordering accessories and valves	10

1 Scope of delivery

For the scope of delivery of the valve, please refer to the "Data sheet" of this valve (part II of these operating instructions).

2 Amending general safety instructions

2.1 Information on the name plate

The meaning of the information on the name plate can be read in the correspondingly numbered fields of the following table.

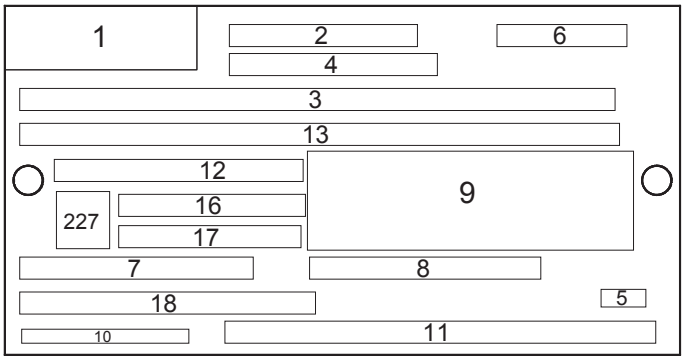

No.	Type of information	Information or example
1	Manufacturer‘s logo	**Rexroth**
2	Material number of the valve (= order number)	**e.g.: MNR: R901377380**
3	Type designation complete valve	**e.g.: 4WS2EM10-5X**
4	Serial number of the valve	**e.g.: SN: 12346**
5	Manufacturer‘s factory number	**e.g.: 7083**
6	Date of manufacture (year and week)	**e.g.: FD: 10119**
7	Maximum operating pressure	**e.g.: pmax = 315 bar**
8	Ambient temperature range	**–30 °C ≤ Ta ≤ +80 °C**
9	Hydraulic symbol according to ISO 1219	Graphic
10	Designation of origin	**Made in Germany**
11	Name and address of the manufacturer	**BOSCH REXROTH AG D–97816 LOHR**
12	Customer‘s or manufacturing order number	**e.g.: 122807240**
13	Customer‘s material number or additional information	**e.g.: CNR: 12345**
16	Mark for the ignition protection according to IEC 60079-0:2012 / IEC 60079-1:2007	**Ex d IIB T4 Gb**
17	IECEx Certificate of Conformity	**IECEx BVS 13.0120 X**
18	KCs Certificate of Conformity	**14-KB4BO-0119X**
227	KCs mark	**Symbol**

2.2 Special residual risks and protective measures

⚠ WARNING

Danger zone	Residual risk	Protective measure(s), safety instruction
Valve	Risk of burning from hot surfaces	Provide for a suitable touch guard. Allow the valve to cool down to room temperature before touching it directly with your hands during maintenance works. Put on heat-protective gloves before touching it, if necessary.

2.2.1 Changes at the surface protection of the valve

⚠ WARNING

Risk of explosion!

Any change at the surface protection will lead to loss of the explosion protection!

Additional painting or any non-conductive coating may only be applied according to the provisions of IEC 60079-0:2011, section 7.4.2; otherwise, explosion protection can no longer be ensured.

2.2.2 Modifications

⚠ WARNING

Modifications exceeding the extent described in these operating instructions are not permitted.

Any modification at the valve or at the electrical connection is prohibited.

2.2.3 Note on the valve use

Observe the following information during the project planning:

⚠ WARNING

During operation, the surface temperature of the valve exceeds 50 °C. Provide for suitable and satisfactory touch guard.

Make sure that there is adequate mechanical protection against any high-pressure water jet that may be used during cleaning.

2.2.4 Working safely at the valve

⚠ DANGER

Before carrying out any work at the valve, you must first make sure that an explosive atmosphere cannot occur during the period of the work.

3 Assembly and (initial) commissioning

3.1 Safety instructions for assembly and (initial) commissioning

⚠ DANGER

Before any work such as assembly or disassembly is carried out at the valve, the hydraulic system must be depressurized and the electrical control de-energized.

In order to avoid dangers from static charges, the mounting or subplate on which the valve is to be fitted must be electrically conductive and included in the equipotential bonding according to IEC 60079-14 and IEC 60364-4-41.

3.2 Before the assembly

IMPORTANT

Before installing the valve into a device or system, the system must be flushed. Only then is the unobjectionable functioning of the valve guaranteed. With an external pilot oil supply make sure that it is flushed, as well. Also observe the operating instructions of the device and/or system into which the valve is installed.

For flushing the system into which the valve is to be installed, flushing plates with FKM seals and porting pattern according to ISO 4401-05-05-0-05 are available. For a dimensional drawing of the flushing plate refer to the "data sheet". Within the flushing plate, ports P, T and T1 as well as X and Y are connected with each other.

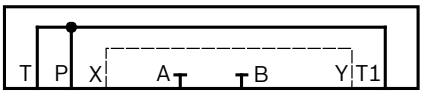

Flushing plate, presentation of the inner connections

Install this flushing plate into the system instead of the valve and subsequently flush it.

⚠ WARNING

For reasons of stability, only mount the flushing plate with the mounting screws intended for that purpose and included in the scope of delivery!

Always fasten the flushing plate with all 4 mounting screws as otherwise, leak-tightness is not guaranteed. See "data sheet".

When using the subplates mentioned under "8.1 Available accessories" or in case of assembly on comparable cast iron installation faces, all four mounting screws are to be tightened with a torque power screwdriver (tolerance ≤ 10 %) and a tightening torque of 16 Nm.

This tightening torque refers to the maximum admissible operating pressure.

The use of a directional valve with port in accordance with ISO 4401-05-05-0-05 is suited better than a flushing plate.

This valve can also be used for flushing the actuator ports.

The following is a guideline for the necessary flushing time t in hours:

$$t \geq \frac{V}{q_v} \cdot 5$$

V = tank capacity in liters

q_V = pump flow in liters / minute

The degree of contamination of the hydraulic fluid that can be monitored by a continuous measurement using a particle counter is decisive for the flushing time.

Install a pressure differential-resistant pressure filter without bypass, if possible with integrated clogging indicator, directly in front of the valve. During the flushing procedure, check all filters in short intervals and exchange the contaminated filter elements, if necessary.

Before assembling the valve make sure that at the valve‘s intended installation position

- ➢ there is enough space so that the valve itself does not have to be disassembled
- ➢ there is enough space for the connection cable.

See "Data sheet, unit dimensions".

3.3 Assembly

⚠ WARNING

Risk of explosion!
Check whether the explosion protection marks on the name plate of the valve comply with the information in these operating instructions.

Please check if you have the right valve type by means of the type designation on the name plate of the valve.

Also check the scope of delivery for completeness and possible transport damage. Also observe the safety instructions in "2.2 Special residual risks and protective measures" as well as "2.2.4 Working safely at the valve".

Check whether the operating instructions for the valve are complete. Contact us if the operating instructions are incomplete.

Before any assembly and disassembly work starts, the surroundings must be cleaned so that no dirt can get into the oil circuit. Only non-linting fabric or special paper may be used for cleaning.

IMPORTANT

If the valve is directly attached to a moveable actuator, installation of the valve control spool parallel to the direction of acceleration of the actuator has to be avoided.

1. Check the connection surface for the required surface quality (see "Data sheet, unit dimensions"). Remove the protective plate from the valve and keep it safe for returns in case any repairs become necessary later.
2. Check the seal rings at the valve connection surface for completeness. Other sealants are inadmissible.

IMPORTANT

The valve ports X and Y are also pressurized in case of internal pilot oil supply and pilot oil return. You must therefore make sure that the contact surfaces X and Y are in any case sealed.

3. Remove existing preservative agent.
4. Check whether at the subplate, the pressure connection line is connected with P and the return line with T.

IMPORTANT

Exchanging P and T may cause damage at the valve in case of pressurization.

5. Put the valve on the contact surface.

⚠ WARNING

For reasons of stability, exclusively the valve mounting screws specified in "8.1 Available accessories" may be used!
Always fasten the valve with all 4 valve mounting screws as otherwise, leak-tightness is not guaranteed.

When using the subplates mentioned under "8.1 Available accessories" or in case of assembly on comparable cast iron installation faces, all four valve mounting screws are to be tightened with a torque power screwdriver (tolerance ≤ 10 %) and a tightening torque of 16 Nm.
This tightening torque refers to the maximum admissible operating pressure.

If the valve is to be used at a reduced maximum pressure and in this connection is to be mounted on mounting faces of a different material, it might be necessary to use a lower tightening torque in order to exclude any damage.

⚠ DANGER

Before connection works, de-energize the control line.
Avoid sharp bends in connection lines and litz wires to prevent short-circuits and interruptions.
The connection cable must be passed in a pull-relieved way!
Use finely stranded conductors only if they have pressed-on wire end ferrules.

IMPORTANT

Check the correct assignment of the connection cable litz wires at the external control electronics.

6. Connect the connection cable to the external control electronics and pass it in a pull-relieved way. The first mounting point must be within 20 cm of the cable gland.
7. Make sure that pipes and/or hoses are connected to all ports and/or that the ports are sealed with screw plugs.
8. Carry out a special check to make sure that the cap nuts and flanges are correctly tightened at the pipe fittings and flanges.

IMPORTANT

Mark all checked fittings, e. g. using a permanent marker.

9. Make sure that all pipes and hose lines and every combination of connection pieces, couplings or connection points with hoses or pipes are checked for their operational safety by a person with appropriate knowledge and experience.

3.4 Initial commissioning, re-commissioning

⚠ WARNING

For ensuring type of protection d "flameproof enclosure", the occurrence of explosive atmospheres in the hydraulic area of the valve must be securely avoided. This may be ensured by applying a sufficiently high control pressure (≥ 10 bar in channel P and/or X) before applying an electrical signal at the coils or the electronics.

3.4.1 Performing a functional test

If possible, only check hydraulic functions in a controlled way and at low pressure.

IMPORTANT

For the control and functional test, special test devices are available. See "8.1 Available accessories".

3.4.2 Performing a leak test

Check whether during operation, hydraulic fluid leaks at the valve or at the connections.

4 Disassembly

⚠ DANGER

Ensure before the disassembly that the hydraulic system is depressurized and the electrical control is de-energized.

Never disassemble the valve cap and the cable gland. Disassembly of the valve cap and the cable gland will lead to loss of the explosion protection!

1. Disconnect the connection cable from the external control electronics.
2. Have a container ready for collecting the escaping hydraulic fluid.
3. Only loosen the valve mounting screws using a suitable tool.
4. Remove the valve mounting screws and take off the valve from the flange surface.
5. Collect the escaping hydraulic fluid in the provided container and dispose of it properly.
6. If the valve is to be returned to the manufacturer for repair, close the valve connection surface using the supplied protective plate or protect it using equivalent packaging in order to avoid pollution and damage.
7. Seal the subplate in order to avoid contamination.

5 Troubleshooting

The valve is not sensitive to faults as long as the specified operating conditions are complied with, in particular the oil quality.

Error	Possible cause(s)	Remedy
Valve does not react to actuation	Electrical connection interrupted, no current continuity	
	• Cable break	Remove valve and have it repaired
	• Connection cable not connected	Connect the connection cable to the external control electronics
	• Valve-internal cable break	Remove valve and have it repaired
	No pilot oil pressure available	
	• No pressure at X or P	Ensure the pilot oil supply
	• Filter blocked	Exchange filter element and check system for contamination
	• Orifice blocked	Remove valve and have it repaired
Zero flow too high	• Control edges worn	Remove valve and have it repaired
Bad dynamic behavior	• Filter contaminated	Exchange filter element and check system for contamination
	• Orifice contaminated	Remove valve and have it repaired
Instable zero point	• Control spool friction due to contamination	Remove valve and have it repaired
Hysteresis	• Control spool friction due to contamination	Remove valve and have it repaired
Large zero point deviation	• Orifice contaminated	Remove valve and have it repaired
External leakage	Seal defective	
	• Seal at the contact surface is defective	Remove the valve and replace the seals
	• Seal at filter screw is defective	Disassemble the filter screw and replace the seal
	• Other leakage	Remove valve and replace it with a new one

Following faults due to contamination, it is - in addition to the repair - essential to check the oil quality and improve it, if necessary, by suitable measures such as flushing or the additional installation of filters.

6 Inspection and maintenance

If the prescribed operating conditions are observed, the valve is maintenance-free.

Within the scope of regular maintenance works at the system, it is only reasonable to check the servo valve for external leakage.

7 Repair and spare parts

7.1 Safety instructions regarding repairs

⚠ DANGER

In the interests of your safety, please observe all safety instructions carefully and at any time.

- **For repair works, the valve may only be disassembled to the extent described in this "Product-specific instruction".**
- **Defective parts may only be replaced by new, interchangeable, tested components in original equipment quality.**
- **Clean the external environment of fittings and devices before the disassembly. Do not use cotton waste for the cleaning.**
- **Close all openings using protective caps.**
- **Never disassemble the valve cap and the cable gland. Disassembly of the valve cap will lead to loss of the explosion protection!**

7.2 Exchanging the filter element

The valve contains an installed, exchangeable filter element. You can also exchange the filter element if the valve has already been installed. Replacement filter elements with FKM seal are available as spare part, see "7.4 Available spare parts".

In case of contamination, you must exchange the filter element as follows.

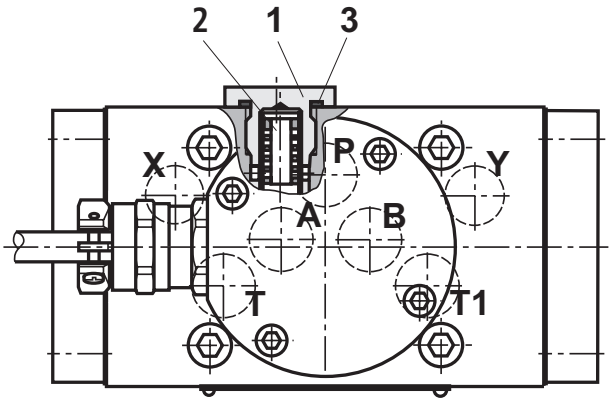

1 Filter screw

2 Filter element

3 Profile seal

1. De-pressurize the system.
2. Screw out the filter screw (1) (wrench size 22).
3. Pull the filter element (2) out of the filter screw (1) using an M4 screw, clean the filter screw (1).

IMPORTANT

Do not clean the filter element; it must imperatively be replaced with a new one.

4. Check the profile seal (3) at the filter screw (1) for integrity and exchange it, if necessary (see 7.4 Available spare parts).
5. Install a new filter element in the filter screw (1).
6. Screw the filter screw (1) into the valve housing and tighten it using a tightening torque of 30 Nm.
7. After the filter element has been exchanged, you should check the system for contamination before re-commissioning. In this connection, observe the operating instructions of the relevant system manufacturer.

7.3 Rectifying external leakages

External leakages at the valve connection surface and at the filter screw can be rectified on site. Other leakages have to be rectified by specialists of the manufacturer.

7.3.1 Rectifying leakage at the valve connection surface

1. Remove the valve, see "4 Disassembly".
2. Check the seal recesses on the valve connection surface for cleanliness and damage.
3. Fit the new seals.

7.3.2 Rectifying leakage at the filter screw

1. Disassemble the filter screw as described under "7.2 Exchanging the filter element".
2. Check the sealing surface for profile seal for cleanliness and damage.
3. Fit the new seal.

7.4 Available spare parts

➢ Exchangeable filter element with FKM seal and FKM profile seal item (3)
for filter screw M16 x 1.5,
mat. no. R961001950

➢ Standard seal kit complete,
mat. no. R900873124

7.5 Contacts for repair and spare parts

Bosch Rexroth AG
Service Industriehydraulik
Bürgermeister-Dr. Nebel-Str. 8
97816 Lohr am Main
Germany

Phone +49 (9352) 18-1164
Fax +49 (9352) 18-3363

www.boschrexroth.com/service

8 Accessories

8.1 Available accessories

➢ Valve mounting screws:
For reasons of stability, exclusively use the following valve mounting screws.

4 hexagon socket head cap screws
ISO 4762 – M6 x 70 - 10.9 - flZn - 240h - L
(friction coefficient 0.09...0.14 according to VDA 235-101),
mat. no. R913000282

➢ Subplates with dimensions like in the "data sheet 45054" for valves with porting pattern according to
ISO 4401-05-05-0-05

- G 66/01 FE/ZN with G 3/8 ports
Mat. no. R900339374
- G 67/01 FE/ZN with G 1/2 ports
Mat. no. R900436900
- G 535/01 FE/ZN with G 3/4 ports,
with X and Y port
Mat. no. R900336998
- G 535/02 FE/ZN with M27 x 2 ports,
with X and Y port
Upon request
- G 536/01 FE/ZN with G 1 ports,
with X and Y port
Upon request
- G 536/02 FE/ZN with M33 x 2 ports,
with X and Y port
Upon request

➢ Flushing plate with FKM seals, according to
ISO 4401-05-05-0-05, mat. no. R900912450

➢ Test device VT-SVTSY according to "data sheet 29681", battery-operated, can optionally be operated with power supply unit.

IMPORTANT

The test device has not been specified according to the explosion protection directives and may therefore only be used if the occurrence of an explosive atmosphere during the test can be excluded with certainty.

➢ Servo amplifier (external)

- In modular design, type VT 11021
according to "data sheet 29743"
- Europe format, type VT-SR2-1X/... according to "data sheet 29980"

⚠ WARNING

The servo amplifier has not been specified according to the explosion protection directives and may therefore only be used outside the explosive environment.

8.2 Address for ordering accessories and valves

Headquarters:
Bosch Rexroth AG
Hydraulics
Zum Eisengießer 1
97816 Lohr am Main
Germany

Phone +49 (9352) 18-0

or the respectively competent sales organizations. You can find the addresses on the Internet at:

www.boschrexroth.com

Bosch Rexroth AG
Hydraulics
Zum Eisengießer 1
97816 Lohr am Main, Germany
Phone+49 (0) 93 52 / 18-0
documentation@boschrexroth.de
www.boschrexroth.de

© This document, as well as the data, specifications and other information set forth in it, are the exclusive property of Bosch Rexroth AG. It may not be reproduced or given to third parties without its consent.
The data specified above only serve to describe the product. No statements concerning a certain condition or suitability for a certain application can be derived from our information. The information given does not release the user from the obligation of own judgment and verification. It must be remembered that our products are subject to a natural process of wear and aging.

Rexroth
Bosch Group

Bosch Rexroth AG
Hydraulics
Zum Eisengießer 1
97816 Lohr, Germany
info@boschrexroth.de
www.boschrexroth.com

Printed in Germany
RE 29583-XD5-100-B0/05.14