rexroth
A Bosch Company

Operating Instructions

# ctrlX DRIVE

Drive Controllers, Supply Units

(Translation of the Original Operating Instructions)

R911392532, Edition 03

**Copyright**

© Bosch Rexroth AG 2023
All rights reserved, also regarding any disposal, exploitation, reproduction, editing, distribution, as well as in the event of applications for industrial property rights.

**Liability**

The specified data is intended for product description purposes only and shall not be deemed to be a guaranteed characteristic unless expressly stipulated in the contract. All rights are reserved with respect to the content of this documentation and the availability of the product.

DOK-XDRV**-X**********-IT03-EN-P

565af7adf8e2bc7e0a347e88455b9ed9, 2, en_US

# Supplemental directives

| Deutsch | English | Français |
|---|---|---|
| **⚠WARNUNG Lebensgefahr bei Nichtbeachtung der nachstehenden Sicherheitshinweise!**<br>Nehmen Sie die Produkte erst dann in Betrieb, nachdem Sie die mit dem Produkt gelieferten Unterlagen und Sicherheitshinweise vollständig durchgelesen, verstanden und beachtet haben.<br>Sollten Ihnen keine Unterlagen in Ihrer Landessprache vorliegen, wenden Sie sich an Ihren zuständigen Rexroth-Vertriebspartner.<br>Nur qualifiziertes Personal darf an Antriebskomponenten arbeiten.<br>Nähere Erläuterungen zu den Sicherheitshinweisen entnehmen Sie Kapitel 3 dieser Dokumentation. | **⚠WARNING Danger to life in case of non-compliance with the below-mentioned safety instructions!**<br>Do not attempt to install or put these products into operation until you have completely read, understood and observed the documents supplied with the product.<br>If no documents in your language were supplied, please consult your Rexroth sales partner.<br>Only qualified persons may work with drive components.<br>For detailed explanations on the safety instructions, see chapter 3 of this documentation. | **⚠AVERTISSEMENT Danger de mort en cas de non-respect des consignes de sécurité figurant ci-après !**<br>Ne mettez les produits en service qu'après avoir lu complètement et après avoir compris et respecté les documents et les consignes de sécurité fournis avec le produit.<br>Si vous ne disposez pas de la documentation dans votre langue, merci de consulter votre partenaire Rexroth.<br>Seul un personnel qualifié est autorisé à travailler sur les composants d'entraînement.<br>Vous trouverez des explications plus détaillées relatives aux consignes de sécurité au chapitre 3 de la présente documentation. |
| **⚠WARNUNG Hohe elektrische Spannung! Lebensgefahr durch elektrischen Schlag!**<br>Betreiben Sie Antriebskomponenten nur mit fest installiertem Schutzleiter.<br>Schalten Sie vor Zugriff auf Antriebskomponenten die Spannungsversorgung aus.<br>Beachten Sie die Entladezeiten von Kondensatoren. | **⚠WARNING High electrical voltage! Danger to life by electric shock!**<br>Only operate drive components with a permanently installed equipment grounding conductor.<br>Disconnect the power supply before accessing drive components.<br>Observe the discharge times of the capacitors. | **⚠AVERTISSEMENT Tensions électriques élevées ! Danger de mort par électrocution !**<br>N'exploitez les composants d'entraînement que si un conducteur de protection est installé de manière permanente.<br>Avant d'intervenir sur les composants d'entraînement, coupez toujours la tension d'alimentation.<br>Tenez compte des délais de décharge de condensateurs. |
| **⚠WARNUNG Gefahrbringende Bewegungen! Lebensgefahr!**<br>Halten Sie sich nicht im Bewegungsbereich von Maschinen und Maschinenteilen auf.<br>Verhindern Sie den unbeabsichtigten Zutritt für Personen.<br>Bringen Sie vor dem Zugriff oder Zutritt in den Gefahrenbereich die Antriebe sicher zum Stillstand. | **⚠WARNING Dangerous movements! Danger to life!**<br>Keep free and clear of the ranges of motion of machines and moving machine parts.<br>Prevent personnel from accidentally entering the range of motion of machines.<br>Make sure that the drives are brought to safe standstill before accessing or entering the danger zone. | **⚠AVERTISSEMENT Mouvements entraînant une situation dangereuse ! Danger de mort !**<br>Ne séjournez pas dans la zone de mouvement de machines et de composants de machines.<br>Évitez tout accès accidentel de personnes.<br>Avant toute intervention ou tout accès dans la zone de danger, assurez-vous de l'arrêt préalable de tous les entraînements. |

| Deutsch | English | Français |
|---|---|---|
| **⚠WARNUNG Elektromagnetische / magnetische Felder! Gesundheitsgefahr für Personen mit Herzschrittmachern, metallischen Implantaten oder Hörgeräten!**<br>Zutritt zu Bereichen, in denen Antriebskomponenten montiert und betrieben werden, ist für oben genannten Personen untersagt bzw. nur nach Rücksprache mit einem Arzt erlaubt. | **⚠WARNING Electromagnetic / magnetic fields! Health hazard for persons with heart pacemakers, metal implants or hearing aids!**<br>The above-mentioned persons are not allowed to enter areas in which drive components are mounted and operated, or rather are only allowed to do this after they consulted a doctor. | **⚠AVERTISSEMENT Champs électromagnétiques / magnétiques ! Risque pour la santé des porteurs de stimulateurs cardiaques, d'implants métalliques et d'appareils auditifs !**<br>L'accès aux zones où sont montés et exploités les composants d'entraînement est interdit aux personnes susmentionnées ou bien ne leur est autorisé qu'après consultation d'un médecin. |
| **⚠VORSICHT Heiße Oberflächen (> 60 °C)! Verbrennungsgefahr!**<br>Vermeiden Sie das Berühren von metallischen Oberflächen (z. B. Kühlkörpern). Abkühlzeit der Antriebskomponenten einhalten (mind. 15 Minuten). | **⚠CAUTION Hot surfaces (> 60 °C [140 °F])! Risk of burns!**<br>Do not touch metallic surfaces (e.g. heat sinks). Comply with the time required for the drive components to cool down (at least 15 minutes). | **⚠ATTENTION Surfaces chaudes (> 60 °C)! Risque de brûlure !**<br>Évitez de toucher des surfaces métalliques (p. ex. dissipateurs thermiques). Respectez le délai de refroidissement des composants d'entraînement (au moins 15 minutes). |
| **⚠VORSICHT Unsachgemäße Handhabung bei Transport und Montage! Verletzungsgefahr!**<br>Verwenden Sie geeignete Montage- und Transporteinrichtungen.<br>Benutzen Sie geeignetes Werkzeug und persönliche Schutzausrüstung. | **⚠CAUTION Improper handling during transport and mounting! Risk of injury!**<br>Use suitable equipment for mounting and transport.<br>Use suitable tools and personal protective equipment. | **⚠ATTENTION Manipulation incorrecte lors du transport et du montage ! Risque de blessure !**<br>Utilisez des dispositifs de montage et de transport adéquats.<br>Utilisez des outils appropriés et votre équipement de protection personnel. |
| **⚠VORSICHT Unsachgemäße Handhabung von Batterien! Verletzungsgefahr!**<br>Versuchen Sie nicht, leere Batterien zu reaktivieren oder aufzuladen (Explosions- und Verätzungsgefahr).<br>Zerlegen oder beschädigen Sie keine Batterien. Werfen Sie Batterien nicht ins Feuer. | **⚠CAUTION Improper handling of batteries! Risk of injury!**<br>Do not attempt to reactivate or recharge low batteries (risk of explosion and chemical burns).<br>Do not dismantle or damage batteries. Do not throw batteries into open flames. | **⚠ATTENTION Manipulation incorrecte de piles! Risque de blessure!**<br>N'essayez pas de réactiver des piles vides ou de les charger (risque d'explosion et de brûlure par acide).<br>Ne désassemblez et n'endommagez pas les piles. Ne jetez pas des piles dans le feu. |

| Español | Português | Italiano |
|---|---|---|
| **⚠ADVERTENCIA ¡Peligro de muerte en caso de no observar las siguientes indicaciones de seguridad!**<br>Los productos no se pueden poner en servicio hasta después de haber leído por completo, comprendido y tenido en cuenta la documentación y las advertencias de seguridad que se incluyen en la entrega.<br>Si no dispusiera de documentación en el idioma de su país, diríjase a su distribuidor competente de Rexroth.<br>Solo el personal debidamente cualificado puede trabajar en componentes de accionamiento.<br>Encontrará más detalles sobre las indicaciones de seguridad en el capítulo 3 de esta documentación. | **⚠ATENÇÃO Perigo de vida em caso de inobservância das seguintes instruções de segurança!**<br>Utilize apenas os produtos depois de ter lido, compreendido e tomado em consideração a documentação e as instruções de segurança fornecidas juntamente com o produto.<br>Se não tiver disponível a documentação na sua língua, dirija-se ao seu parceiro de venda responsável da Rexroth.<br>Apenas pessoal qualificado pode trabalhar nos componentes de acionamento.<br>Explicações mais detalhadas relativamente às instruções de segurança constam no capítulo 3 desta documentação. | **⚠AVVERTENZA Pericolo di morte in caso di inosservanza delle seguenti indicazioni di sicurezza!**<br>Mettere in funzione i prodotti solo dopo aver letto, compreso e osservato per intero la documentazione e le indicazioni di sicurezza fornite con il prodotto.<br>Se non dovesse essere presente la documentazione nella vostra lingua, siete pregati di rivolgervi al rivenditore Rexroth competente.<br>Solo personale qualificato può eseguire lavori sui componenti di comando.<br>Per ulteriori spiegazioni riguardanti le indicazioni di sicurezza consultare il capitolo 3 di questa documentazione. |
| **⚠ADVERTENCIA ¡Alta tensión eléctrica! ¡Peligro de muerte por descarga eléctrica!**<br>Active sólo los componentes de accionamiento con el conductor protector firmemente instalado.<br>Desconecte la alimentación eléctrica antes de manipular los componentes de accionamiento.<br>Tenga en cuenta los tiempos de descarga de los condensadores. | **⚠ATENÇÃO Alta tensão elétrica! Perigo de vida devido a choque elétrico!**<br>Opere componentes de acionamento apenas com condutores de proteção instalados.<br>Desligue a alimentação de tensão antes de aceder aos componentes de acionamento.<br>Respeite os períodos de descarga dos condensadores. | **⚠AVVERTENZA Alta tensione elettrica! Pericolo di morte in seguito a scosse elettriche!**<br>Mettere in esercizio i componenti di comando solo con conduttore di messa a terra ben installato.<br>Staccare l'alimentazione prima di intervenire sui componenti di comando.<br>Osservare i tempi di scarica del condensatore. |
| **⚠ADVERTENCIA ¡Movimientos peligrosos! ¡Peligro de muerte!**<br>No permanezca en la zona de movimiento de las máquinas ni de sus piezas.<br>Impida el acceso accidental de personas.<br>Antes de acceder o introducir las manos en la zona de peligro, los accionamientos se tienen que haber parado con seguridad. | **⚠ATENÇÃO Movimentos perigosos! Perigo de vida!**<br>Não permaneça na área de movimentação das máquinas e das peças das máquinas.<br>Evite o acesso involuntário para pessoas.<br>Antes de entrar ou aceder à área perigosa, imobilize os acionamentos de forma segura. | **⚠AVVERTENZA Movimenti pericolosi! Pericolo di morte!**<br>Non sostare nelle zone di manovra delle macchine e delle loro parti.<br>Impedire un accesso non autorizzato per le persone.<br>Prima di accedere alla zona di pericolo, arrestare e bloccare gli azionamenti. |
| **⚠ADVERTENCIA ¡Campos electromagnéticos/magnéticos! ¡Peligro para la salud de las personas con marcapasos, implantes metálicos o audífonos!**<br>El acceso de las personas arriba mencionadas a las zonas de montaje o funcionamiento de los componentes de accionamiento está prohibido, salvo que lo autorice previamente un médico. | **⚠ATENÇÃO Campos eletromagnéticos / magnéticos! Perigo de saúde para pessoas com marcapassos, implantes metálicos ou aparelhos auditivos!**<br>Acesso às áreas, nas quais os componentes de acionamento são montados e operados, é proibido para as pessoas em cima mencionadas ou apenas após permissão de um médico. | **⚠AVVERTENZA Campi elettromagnetici / magnetici! Pericolo per la salute delle persone portatrici di pacemaker, protesi metalliche o apparecchi acustici!**<br>L'accesso alle zone in cui sono installati o in funzione componenti di comando è vietato per le persone sopra citate o consentito solo dopo un colloquio con il medico. |

| Español | Português | Italiano |
|---|---|---|
| **⚠ATENCIÓN ¡Superficies calientes (> 60 °C)! ¡Peligro de quemaduras!**<br>Evite el contacto con las superficies calientes (p. ej., disipadores de calor). Observe el tiempo de enfriamiento de los componentes de accionamiento (mín. 15 minutos). | **⚠CUIDADO Superfícies quentes (> 60 °C)! Perigo de queimaduras!**<br>Evite tocar superfícies metálicas (p. ex. radiadores). Respeite o tempo de arrefecimento dos componentes de acionamento (mín. 15 minutos). | **⚠ATTENZIONE Superfici bollenti (> 60 °C)! Pericolo di ustioni!**<br>Evitare il contatto con superfici metalliche (ad es. dissipatori di calore). Rispettare i tempi di raffreddamento dei componenti di comando (almeno 15 minuti). |
| **⚠ATENCIÓN ¡Manipulación inadecuada en el transporte y montaje! ¡Peligro de lesiones!**<br>Utilice dispositivos de montaje y de transporte adecuados.<br>Utilice herramientas adecuadas y equipo de protección personal. | **⚠CUIDADO Manejo incorreto no transporte e montagem! Perigo de ferimentos!**<br>Utilize dispositivos de montagem e de transporte adequados.<br>Utilize ferramentas e equipamento de proteção individual adequados. | **⚠ATTENZIONE Manipolazione inappropriata durante il trasporto e il montaggio! Pericolo di lesioni!**<br>Utilizzare dispositivi di montaggio e trasporto adatti.<br>Utilizzare attrezzi adatti ed equipaggiamento di protezione personale. |
| **⚠ATENCIÓN ¡Manejo inadecuado de las pilas! ¡Peligro de lesiones!**<br>No trate de reactivar o cargar pilas descargadas (peligro de explosión y cauterización).<br>No desarme ni dañe las pilas. No tire las pilas al fuego. | **⚠CUIDADO Manejo incorreto de baterias! Perigo de ferimentos!**<br>Não tente reativar nem carregar baterias vazias (perigo de explosão e de queimaduras com ácido).<br>Não desmonte nem danifique as baterias. Não deite as baterias no fogo. | **⚠ATTENZIONE Utilizzo inappropriato delle batterie! Pericolo di lesioni!**<br>Non tentare di riattivare o ricaricare batterie scariche (pericolo di esplosione e corrosione).<br>Non scomporre o danneggiare le batterie. Non gettare le batterie nel fuoco. |

| Svenska | Dansk | Nederlands |
|---|---|---|
| **⚠VARNING Livsfara om följande säkerhetsanvisningar inte följs!**<br>Använd inte produkterna innan du har läst och förstått den dokumentation och de säkerhetsanvisningar som medföljer produkten, och följ alla anvisningar.<br>Kontakta din Rexroth-återförsäljare om dokumentationen inte medföljer på ditt språk.<br>Endast kvalificerad personal får arbeta med drivkomponenterna.<br>Se kapitel 3 i denna dokumentation för närmare beskrivningar av säkerhetsanvisningarna. | **⚠ADVARSEL Livsfare ved manglende overholdelse af nedenstående sikkerhedsanvisninger!**<br>Tag ikke produktet i brug, før du har læst og forstået den dokumentation og de sikkerhedsanvisninger, som følger med produktet, og overhold de givne anvisninger.<br>Kontakt din Rexroth-forhandler, hvis dokumentationen ikke medfølger på dit sprog.<br>Det er kun kvalificeret personale, der må arbejde på drive components.<br>Nærmere forklaringer til sikkerhedsanvisningerne fremgår af kapitel 3 i denne dokumentation. | **⚠WAARSCHUWING Levensgevaar bij nietnaleving van onderstaande veiligheidsinstructies!**<br>Stel de producten pas in bedrijf nadat u de met het product geleverde documenten en de veiligheidsinformatie volledig gelezen, begrepen en in acht genomen heeft.<br>Mocht u niet beschikken over documenten in uw landstaal, kunt u contact opnemen met uw plaatselijke Rexroth distributiepartner.<br>Uitsluitend gekwalificeerd personeel mag aan de aandrijvingscomponenten werken.<br>Meer informatie over de veiligheidsinstructies vindt u in hoofdstuk 3 van deze documentatie. |
| **⚠VARNING Hög elektrisk spänning! Livsfara genom elchock!**<br>Använd endast drivkomponenterna med fastmonterad skyddsledare.<br>Koppla bort spänningsförsörjningen före arbete på drivkomponenter.<br>Var medveten om kondensatorernas urladdningstid. | **⚠ADVARSEL Elektrisk højspænding! Livsfare på grund af elektrisk stød!**<br>Drive components må kun benyttes med et fast installeret jordstik.<br>Sørg for at koble spændingsforsyningen fra, inden du rører ved drive components.<br>Overhold kondensatorernes afladningstider. | **⚠WAARSCHUWING Hoge elektrische spanning! Levensgevaar door elektrische schok!**<br>Bedien de aandrijvingscomponenten uitsluitend met vast geïnstalleerde aardleiding.<br>Schakel voor toegang tot aandrijvingscomponenten de spanningsvoorziening uit.<br>Neem de ontlaadtijden van condensatoren in acht. |

| Svenska | Dansk | Nederlands |
|---|---|---|
| **⚠VARNING Farliga rörelser! Livsfara!**<br>Uppehåll dig inte inom maskiners och maskindelars rörelseområde.<br>Förhindra att obehöriga personer får tillträde.<br>Innan du börjar arbeta eller vistas inom drivsystemets riskområde måste maskinen vara stillastående. | **⚠ADVARSEL Farlige bevægelser! Livsfare!**<br>Du må ikke opholde dig inden for maskiners og maskindeles bevægelsesradius.<br>Sørg for, at ingen personer kan få utilsigtet adgang.<br>Stands drevene helt, inden du rører ved drevene eller træder ind i deres fareområde. | **⚠WAARSCHUWING Risicovolle bewegingen! Levensgevaar!**<br>Houdt u niet op in het bewegingsbereik van machines en machineonderdelen.<br>Voorkom dat personen onbedoeld toegang verkrijgen.<br>Voor toegang tot de gevaarlijke zone moeten de aandrijvingen veilig tot stilstand gebracht zijn. |
| **⚠VARNING Elektromagnetiska/magnetiska fält! Hälsofara för personer med pacemaker, implantat av metall eller hörapparat!**<br>Det är förbjudet för ovan nämnda personer (eller kräver överläggning med läkare) att beträda områden där drivkomponenter är monterade och i drift. | **⚠ADVARSEL Elektromagnetiske/magnetiske felter! Sundhedsfare for personer med pacemakere, metalliske implantater eller høreapparater!**<br>For disse personer er der adgang forbudt eller kun adgang med tilladelse fra læge til de områder, hvor drive components monteres og drives. | **⚠WAARSCHUWING Elektromagnetische / magnetische velden! Gevaar voor de gezondheid van personen met pacemakers, metalen implantaten of hoorapparaten!**<br>Toegang tot gebieden, waarin aandrijvingscomponenten worden gemonteerd en bediend, is verboden voor voornoemde personen of uitsluitend toegestaan na overleg met een arts. |
| **⚠OBSERVERA Varma ytor (> 60 °C)! Risk för brännskador!**<br>Undvik att vidröra metallytor (t.ex. kylelement). Var medveten om att det tar tid för drivkomponenterna att svalna (minst 15 minuter). | **⚠ADVARSEL Varme overflader (> 60 °C)! Risiko for forbrændinger!**<br>Undgå at berøre metaloverflader (f.eks. køleelementer). Overhold drive components nedkølingstid (min. 15 min.). | **⚠VOORZICHTIG Hete oppervlakken (> 60 °C)! Verbrandingsgevaar!**<br>Voorkom contact met metalen oppervlakken (bijv. Koellichamen). Afkoeltijd van de aandrijvingscomponenten in acht nemen (min. 15 minuten). |
| **⚠OBSERVERA Felaktig hantering vid transport och montering! Skaderisk!**<br>Använd passande monterings- och transportanordningar.<br>Använd lämpliga verktyg och personlig skyddsutrustning. | **⚠ADVARSEL Fejlhåndtering ved transport og montering! Risiko for kvæstelser!**<br>Benyt egnede monterings- og transportanordninger.<br>Benyt egnet værktøj og personligt sikkerhedsudstyr. | **⚠VOORZICHTIG Onjuist gebruik bij transport en montage! Letselgevaar!**<br>Gebruik geschikte montage- en transportinrichtingen.<br>Gebruik geschikt gereedschap en een persoonlijke veiligheidsuitrusting. |
| **⚠OBSERVERA Felaktig hantering av batterier! Skaderisk!**<br>Försök inte återaktivera eller ladda upp batterier (risk för explosioner och frätskador).<br>Batterierna får inte tas isär eller skadas. Släng inte batterierna i elden. | **⚠ADVARSEL Fejlhåndtering af batterier! Risiko for kvæstelser!**<br>Forsøg ikke at genaktivere eller oplade tomme batterier (eksplosions- og ætsningsfare).<br>Undlad at skille batterier ad eller at beskadige dem. Smid ikke batterier ind i åben ild. | **⚠VOORZICHTIG Onjuist gebruik van batterijen! Letselgevaar!**<br>Probeer nooit lege batterijen te reactiveren of op te laden (explosiegevaar en gevaar voor beschadiging van weefsel door cauterisatie).<br>Batterijen niet demonteren of beschadigen. Nooit batterijen in het vuur werpen. |

| Suomi | Polski | Český |
|---|---|---|
| **⚠VAROITUS Näiden turvaohjeiden noudattamatta jättämisestä on seurauksena hengenvaara!**<br>Ota tuote käyttöön vasta sen jälkeen, kun olet lukenut läpi tuotteen mukana toimitetut asiakirjat ja turvallisuusohjeet, ymmärtänyt ne ja ottanut ne huomioon.<br>Jos asiakirjoja ei ole saatavana omalla äidinkielelläsi, ota yhteys asianomaiseen Rexrothin myyntiedustajaan.<br>Käyttölaitteiden komponenttien parissa saa työskennellä ainoastaan valtuutettu henkilöstö.<br>Lisätietoa turvaohjeista löydät tämän dokumentaation luvusta 3. | **⚠OSTRZEŻENIE Zagrożenie życia w razie nieprzestrzegania poniższych wskazówek bezpieczeństwa!**<br>Nie uruchamiać produktów przed uprzednim przeczytaniem i pełnym zrozumieniem wszystkich dokumentów dostarczonych wraz z produktem oraz wskazówek bezpieczeństwa. Należy przestrzegać wszystkich zawartych tam zaleceń.<br>W przypadku braku dokumentów w Państwa języku, prosimy o skontaktowanie się z lokalnym partnerem handlowym Rexroth.<br>Przy zespołach napędowych może pracować wyłącznie wykwalifikowany personel.<br>Bliższe objaśnienia wskazówek bezpieczeństwa znajdują się w Rozdziale 3 niniejszej dokumentacji. | **⚠VAROVÁNÍ Nebezpečí života v případě nedodržení níže uvedených bezpečnostních pokynů!**<br>Před uvedením výrobků do provozu si přečtěte kompletní dokumentaci a bezpečnostní pokyny dodávané s výrobkem, pochopte je a dodržujte.<br>Nemáte-li k dispozici podklady ve svém jazyce, obraťte se na příslušného obchodního partnera Rexroth.<br>Na komponentách pohonu smí pracovat pouze kvalifikovaný personál.<br>Podrobnější vysvětlení k bezpečnostním pokynům naleznete v kapitole 3 této dokumentace. |
| **⚠VAROITUS Voimakas sähköjännite! Sähköiskun aiheuttama hengenvaara!**<br>Käytä käyttölaitteen komponentteja ainoastaan maadoitusjohtimen ollessa kiinteästi asennettuna.<br>Katkaise jännitteensyöttö ennen käyttölaitteen komponenteille suoritettavien töiden aloittamista.<br>Huomioi kondensaattoreiden purkausajat. | **⚠OSTRZEŻENIE Wysokie napięcie elektryczne! Zagrożenie życia w wyniku porażenia prądem!**<br>Zespoły napędu mogą być eksploatowane wyłącznie z zainstalowanym na stałe przewodem ochronnym.<br>Przed uzyskaniem dostępu do podzespołów napędu należy odłączyć zasilanie elektryczne.<br>Zwracać uwagę na czas rozładowania kondensatorów. | **⚠VAROVÁNÍ Vysoké elektrické napětí! Nebezpečí života při zasažení elektrickým proudem!**<br>Komponenty pohonu smí být v provozu pouze s pevně nainstalovaným ochranným vodičem.<br>Než začnete zasahovat do komponent pohonu, odpojte je od elektrického napájení.<br>Dodržujte vybíjecí časy kondenzátorů. |
| **⚠VAROITUS Vaarallisia liikkeitä! Hengenvaara!**<br>Älä oleskele koneiden tai koneenosien liikealueella.<br>Pidä huolta siitä, ettei muita henkilöitä pääse alueelle vahingossa.<br>Pysäytä käyttölaitteet varmasti ennen vaara-alueelle koskemista tai menemistä. | **⚠OSTRZEŻENIE Niebezpieczne ruchy! Zagrożenie życia!**<br>Nie wolno przebywać w obszarze pracy maszyny i jej elementów.<br>Nie dopuszczać osób niepowołanych do obszaru pracy maszyny.<br>Przed dotknięciem urządzenia/maszyny lub zbliżeniem się do obszaru zagrożenia należy zgodnie z zasadami bezpieczeństwa wyłączyć napędy. | **⚠VAROVÁNÍ Nebezpečné pohyby! Nebezpečí života!**<br>Nezdržujte se v dosahu pohybu strojů a jejich součástí.<br>Zabraňte náhodnému přístupu osob.<br>Před zásahem nebo vstupem do nebezpečného prostoru bezpečně zastavte pohony. |
| **⚠VAROITUS Sähkömagneettisia/magneettisia kenttiä! Terveydellisten haittojen vaara henkilöille, joilla on sydämentahdistin, metallinen implantti tai kuulolaite!**<br>Yllä mainituilta henkilöiltä on pääsy kielletty alueille, joilla asennetaan tai käytetään käyttölaitteen komponentteja, tai heidän on ensin saatava tähän suostumus lääkäriltään. | **⚠OSTRZEŻENIE Pola elektromagnetyczne / magnetyczne! Zagrożenie zdrowia dla osób z rozrusznikiem serca, metalowymi implantami lub aparatami słuchowymi!**<br>Wstęp na teren, gdzie odbywa się montaż i eksploatacja napędów jest dla ww. osób zabroniony względnie dozwolony po konsultacji z lekarzem. | **⚠VAROVÁNÍ Elektromagnetická/magnetická pole! Nebezpečí pro zdraví osob s kardiostimulátory, kovovými implantáty nebo naslouchadly!**<br>Výše uvedené osoby mají zakázán přístup do prostorů, kde jsou montovány a používány komponenty pohonu, resp. ho mají povolen pouze po poradě s lékařem. |

| Suomi | Polski | Český |
|---|---|---|
| **⚠HUOMIO Kuumia pintoja (> 60 °C)! Palovammojen vaara!**<br>Vältä metallipintojen koskettamista (esim. jäähdytyslevyt). Noudata käyttölaitteen komponenttien jäähtymisaikoja (väh. 15 minuuttia). | **⚠PRZESTROGA Gorące powierzchnie (> 60 °C)! Niebezpieczeństwo poparzenia!**<br>Unikać kontaktu z powierzchniami metalowymi (np. radiatorami). Przestrzegać czasów schładzania podzespołów napędów (min. 15 minut). | **⚠UPOZORNĚNÍ Horké povrchy (> 60 °C)! Nebezpečí popálení!**<br>Nedotýkejte se kovových povrchů (např. chladicích těles). Dodržujte dobu ochlazení komponent pohonu (min. 15 minut). |
| **⚠HUOMIO Epäasianmukainen käsittely kuljetuksen ja asennuksen yhteydessä! Loukkaantumisvaara!**<br>Käytä soveltuvia asennus- ja kuljetuslaitteita.<br>Käytä omia työkaluja ja henkilökohtaisia suojavarusteita. | **⚠PRZESTROGA Niewłaściwe obchodzenie się podczas transportu i montażu! Ryzyko urazu!**<br>Stosować odpowiednie urządzenia montażowe i transportowe.<br>Stosować odpowiednie narzędzia i środki ochrony osobistej. | **⚠UPOZORNĚNÍ Nesprávné zacházení při přepravě a montáži! Nebezpečí zranění!**<br>Používejte vhodná montážní a dopravní zařízení.<br>Používejte vhodné nářadí a osobní ochranné vybavení. |
| **⚠HUOMIO Paristojen epäasianmukainen käsittely! Loukkaantumisvaara!**<br>Älä yritä saada tyhjiä paristoja toimimaan tai ladata niitä uudelleen (räjähdys- ja syöpymisvaara).<br>Älä hajota paristoja osiin tai vaurioita niitä. Älä heitä paristoja tuleen. | **⚠PRZESTROGA Niewłaściwe obchodzenie się z bateriami! Ryzyko urazu!**<br>Nie próbować reaktywować i nie ładować zużytych baterii (niebezpieczeństwo wybuchu oraz poparzenia żrącą substancją).<br>Nie demontować i nie niszczyć baterii. Nie wrzucać baterii do ognia. | **⚠UPOZORNĚNÍ Nesprávné zacházení s bateriemi! Nebezpečí zranění!**<br>Nepokoušejte se znovu aktivovat nebo dobíjet prázdné baterie (nebezpečí výbuchu a poleptání).<br>Nerozebírejte ani nepoškozujte baterie. Neházejte baterie do ohně. |

| Slovensko | Slovenčina | Română |
|---|---|---|
| **⚠OPOZORILO Življenjska nevarnost pri neupoštevanju naslednjih napotkov za varnost!**<br>Izdelke začnite uporabljati šele, ko v celoti preberete, razumete in upoštevate izdelkom priloženo dokumentacijo in varnostne napotke.<br>Če priložena dokumentacija ni na voljo v vašem maternem jeziku, se obrnite na pristojnega distributerja Rexroth.<br>Samo kvalificirano osebje sme delati na pogonskih komponentah.<br>Podrobnejša pojasnila o varnostnih navodilih najdete v poglavju 3 v tej dokumentaciji. | **⚠VAROVANIE Nebezpečenstvo ohrozenia života pri nedodržiavaní nasledujúcich bezpečnostných pokynov!**<br>Výrobky uvádzajte do prevádzky až potom, čo ste úplne prečítali, pochopili a zobrali do úvahy podklady a bezpečnostné pokyny dodané s výrobkom.<br>Ak by ste nemali k dispozícii žiadne podklady v jazyku svojej krajiny, obráťte sa prosím na svojho príslušného predajcu Rexroth.<br>Na komponentoch pohonu smie pracovať iba kvalifikovaný personál.<br>Bližšie vysvetlenia k bezpečnostným pokynom zistite z kapitoly 3 tejto dokumentácie. | **⚠AVERTIZARE Pericol de moarte în cazul nerespectării următoarelor instrucţiuni de siguranţă!**<br>Punerea în funcţiune a produselor trebuie efectuată după citirea, înţelegerea şi respectarea documentelor şi instrucţiunilor de siguranţă, care sunt livrate împreună cu produsele.<br>În cazul în care documentele nu sunt în limba dumneavoastră maternă, vă rugăm să contactaţi partenerul de vânzări Rexroth.<br>Numai un personal calificat poate lucra cu componentele de acţionare.<br>Explicaţii detaliate privind instrucţiunile de siguranţă găsiţi în capitolul 3 al acestei documentaţii. |
| **⚠OPOZORILO Visoka električna napetost! Življenjska nevarnost zaradi električnega udara!**<br>Pogonske komponente uporabljajte samo s fiksno nameščenim zaščitnim vodnikom.<br>Pred dostopom do pogonske komponente odklopite napajanje.<br>Upoštevajte čase praznjenja kondenzatorjev. | **⚠VAROVANIE Vysoké elektrické napätie! Nebezpečenstvo ohrozenia života v dôsledku zásahu elektrickým prúdom!**<br>Komponenty pohonu prevádzkujte iba s pevne nainštalovaným ochranným vodičom.<br>Pred prístupom na komponenty pohonu odpojte zdroj napätia.<br>Rešpektujte časy vybitia kondenzátorov. | **⚠AVERTIZARE Tensiune electrică înaltă! Pericol de moarte prin electrocutare!**<br>Exploataţi componentele de acţionare numai cu împământarea instalată permanent.<br>Înainte de intervenţia asupra componentelor de acţionare, deconectaţi alimentarea cu tensiune electrică.<br>Ţineţi cont de timpii de descărcare ai condensatorilor. |

| Slovensko | Slovenčina | Română |
|---|---|---|
| **⚠OPOZORILO Nevarni premiki! Življenjska nevarnost!**<br>Ne zadržujte se v območju delovanja strojev.<br>Preprečite nenadzorovan dostop oseb.<br>Pred prijemom ali dostopom v nevarno območje varno zaustavite vse gnane dele. | **⚠VAROVANIE Pohyby prinášajúce nebezpečenstvo! Nebezpečenstvo ohrozenia života!**<br>Nezdržiavajte sa v oblasti pohybu strojov a častí strojov.<br>Zabráňte nepovolanému prístupu osôb.<br>Pred zásahom alebo prístupom do nebezpečnej oblasti uveďte pohony bezpečne do zastavenia. | **⚠AVERTIZARE Mişcări periculoase! Pericol de moarte!**<br>Nu staționați în zona de mişcare a maşinilor şi a componentelor în mişcare a maşinilor.<br>Împiedicați accesul neintenționat al persoanelor în zona de lucru a maşinilor.<br>Înainte de intervenția sau accesul în zona periculoasă, opriți în siguranță componentele de acționare. |
| **⚠OPOZORILO Elektromagnetna / magnetna polja! Nevarnost za zdravje za osebe s spodbujevalniki srca, kovinskimi vsadki ali slušnimi aparati!**<br>Dostop do območij, v katerih so nameščene delujoče pogonske komponente, je za zgoraj navedene osebe prepovedan oz. dovoljen samo po posvetu z zdravnikom. | **⚠VAROVANIE Elektromagnetické/magnetické polia! Nebezpečenstvo pre zdravie osôb s kardiostimulátormi, kovovými implantátmi alebo načúvacími prístrojmi!**<br>Prístup k oblastiam, v ktorých sú namontované a prevádzkujú sa komponenty pohonu, je pre hore uvedené osoby zakázaný resp. je dovolený iba po konzultácii s lekárom. | **⚠AVERTIZARE Câmpuri electromagnetice / magnetice! Pericol pentru sănătatea persoanelor cu stimulatoare cardiace, implanturi metalice sau aparate auditive!**<br>Intrarea în zone, în care se montează sau se exploatează componente de acționare, este interzisă pentru persoanele sus numite respectiv este permisă numai cu acordul medicului. |
| **⚠POZOR Vroče površine (> 60 °C)! Nevarnost opeklin!**<br>Izogibajte se stiku s kovinskimi površinami (npr. hladilnimi telesi). Upoštevajte čas hlajenja pogonskih komponent (najm. 15 minut). | **⚠UPOZORNENIE Horúce povrchy (> 60 °C)! Nebezpečenstvo popálenia!**<br>Zabráňte kontaktu s kovovými povrchmi (napr. chladiacimi telesami). Dodržiavajte čas vychladenia komponentov pohonu (min. 15 minút). | **⚠ATENTIE Suprafeţe fierbinţi (> 60 °C)! Pericol de arsuri!**<br>Nu atingeți suprafețele metalice (de ex. radiatoare de răcire). Respectați timpii de răcire ai componentelor de acționare (min. 15 minute). |
| **⚠POZOR Nestrokovno ravnanje med transportom in namestitvijo! Nevarnost poškodb!**<br>Uporabljajte ustrezne pripomočke za nameščanje in transport.<br>Uporabite ustrezno orodje in osebno zaščitno opremo. | **⚠UPOZORNENIE Neodborná manipulácia pri transporte a montáži! Nebezpečenstvo poranenia!**<br>Používajte vhodné montážne a transportné zariadenia.<br>Používajte vhodné náradie a osobné ochranné prostriedky. | **⚠ATENTIE Manipulare necorespunzătoare la transport şi montaj! Pericol de vătămare!**<br>Utilizați dispozitive adecvate de montaj şi transport.<br>Folosiți instrumente corespunzătoare şi echipament personal de protecție. |
| **⚠POZOR Nepravilno ravnanje z baterijami! Nevarnost poškodb!**<br>Ne poskušajte ponovno aktivirati ali napolniti praznih baterij (Nevarnost zaradi eksplozij ali jedkanja).<br>Ne razstavljajte ali poškodujte nobenih baterij. Baterij ne mečite v ogenj. | **⚠UPOZORNENIE Neodborná manipulácia s batériami! Nebezpečenstvo poranenia!**<br>Nepokúšajte sa reaktivovať alebo nabíjať prázdne batérie (nebezpečenstvo výbuchu a poleptania).<br>Batérie nerozoberajte ani nepoškodzujte. Nehádžte batérie do ohňa. | **⚠ATENTIE Manipulare necorespunzătoare a bateriilor! Pericol de vătămare!**<br>Nu încercați să reactivați sau să încărcați bateriile goale (pericol de explozie şi pericol de arsuri).<br>Nu dezasamblați şi nu deteriorați bateriile. Nu aruncați bateriile în foc. |

| Magyar | Български | Latviski |
|---|---|---|
| **⚠ FIGYELMEZTETÉS! Az alábbi biztonsági útmutatások figyelmen kívül hagyása életveszélyes helyzethez vezethet!**<br>Üzembe helyezés előtt olvassa el, értelmezze, és vegye figyelembe a csomagban található dokumentumban foglaltakat és a biztonsági útmutatásokat.<br>Amennyiben a csomagban nem talál az Ön nyelvén írt dokumentumokat, vegye fel a kapcsolatot az illetékes Rexroth-képviselővel.<br>A hajtás alkatrészein kizárólag képzett személy dolgozhat.<br>A biztonsági útmutatókkal kapcsolatban további magyarázatot ennek a dokumentumnak az harmadik fejezetében találhat. | **⚠ ПРЕДУПРЕЖДЕНИЕ Опасност за живота при неспазване на посочените по-долу инструкции за безопасност!**<br>Използвайте продуктите след като сте се запознали подробно с приложената към продукта документация и указания за безопасност, разбрали сте ги и сте се съобразили с тях.<br>Ако текстът не е написан на Вашия език, моля обърнете се към Вашия компетентен търговски представител на Rexroth.<br>Със задвижващите компоненти трябва да работи само квалифициран персонал.<br>Подробни пояснения към инструкциите за безопасност можете да видите в Глава 3 на тази документация. | **⚠ BRĪDINĀJUMS Turpinājumā doto drošības norādījumu neievērošana var apdraudēt dzīvību!**<br>Sāciet lietot izstrādājumu tikai pēc tam, kad esat pilnībā izlasījuši, sapratuši un ņēmuši vērā kopā ar izstrādājumu piegādātos dokumentus.<br>Ja dokumenti nav pieejami Jūsu valsts valodā, vērsieties pie pilnvarotā Rexroth izplatītāja.<br>Darbus pie piedziņas komponentiem drīkst veikt tikai kvalificēts personāls.<br>Detalizētus paskaidrojumus attiecībā uz drošības norādījumiem skatiet šī dokumenta 3. nodaļā. |
| **⚠ FIGYELMEZTETÉS! Magas elektromos feszültség! Életveszély áramütés miatt!**<br>A hajtás alkatrészeit csak véglegesen telepített védővezetővel üzemeltesse!<br>Mielőtt hozzányúl a hajtás alkatrészeihez, kapcsolja ki az áramellátást.<br>Ügyeljen a kondenzátorok kisülési idejére! | **⚠ ПРЕДУПРЕЖДЕНИЕ Високо електрическо напрежение! Опасност за живота от удар от електрически ток!**<br>Работете със задвижващите компоненти само при здраво закрепен заземяващ проводник.<br>Преди работа по задвижващите компоненти, изключете захранващото напрежение.<br>Обърнете внимание на времето за разреждане на кондензаторите. | **⚠ BRĪDINĀJUMS Augsts elektriskais spriegums! Dzīvības apdraudējums elektriskā trieciena dēļ!**<br>Piedziņas komponentus darbiniet tikai ar fiksēti uzstādītu zemējumvadu.<br>Pirms darba pie piedziņas komponentiem atslēdziet elektroapgādi.<br>Ņemiet vērā kondensatoru izlādes laikus. |
| **⚠ FIGYELMEZTETÉS! Veszélyes mozgás! Életveszély!**<br>Ne tartózkodjon a gépek és a gépalkatrészek mozgási területén belül!<br>Illetéktelen személyeket ne engedjen a gép közelébe!<br>Mielőtt beavatkozik, vagy a veszélyes zónába belép a hajtásokat biztonságosan állítsa le. | **⚠ ПРЕДУПРЕЖДЕНИЕ Опасни движения! Опасност за живота!**<br>Не стойте в обсега на движение на машините и частите на машините.<br>Не допускайте непреднамерен достъп на хора.<br>Преди работа или влизане в опасната зона, спрете надеждно приводния механизъм. | **⚠ BRĪDINĀJUMS Bīstamas kustības! Dzīvības apdraudējums!**<br>Neuzturieties mašīnu un mašīnas detaļu kustību zonā.<br>Novērsiet nepiederošu personu piekļūšanu.<br>Pirms darba bīstamajās zonās pilnībā apstādiniet piedziņu. |
| **⚠ FIGYELMEZTETÉS! Elektromágneses / mágneses mező! Káros hatással lehet a szívritmus-szabályozó készülékkel, fémbeültetéssel vagy hallókészülékkel rendelkezők egészségére!**<br>Azokra a területekre, ahol hajtások alkatrészeit szerelik és üzemeltetik, a fent említett személyeknek tilos a belépés, illetve csak orvosi konzultációt követően szabad az adott területekre lépniük. | **⚠ ПРЕДУПРЕЖДЕНИЕ Електромагнитни / магнитни полета! Опасност за здравето на хора със сърдечни стимулатори, метални импланти или слухови апарати!**<br>Достъпът за гореспоменатите лица до зони, в които ще се монтират и ще работят задвижващи компоненти се забранява, или разрешава само след консултация с лекар. | **⚠ BRĪDINĀJUMS Elektromagnētiskais / magnētiskais lauks! Veselības apdraudējums personām ar sirds stimulatoriem, metāliskiem implantiem vai dzirdes aparātiem!**<br>Tuvošanās zonām, kurās tiek montēti un darbināti piedziņas komponenti, iepriekš minētajām personām ir aizliegta, respektīvi, atļauta tikai pēc konsultēšanās ar ārstu. |

## Magyar

**⚠ VIGYÁZAT! Forró felületek (> 60 °C)! Égésveszély!**

Ne érjen hozzá fémfelületekhez (pl. hűtőtestekhez)! Vegye figyelembe a hajtás alkatrészeinek kihűlési idejét (min. 15 perc)!

**⚠ VIGYÁZAT! Szakszerűtlen kezelés szállításkor és szereléskor! Sérülésveszély!**

A megfelelő beszerelési és szállítási eljárásokat alkalmazza!

Használjon megfelelő szerszámokat és személyes védőfelszerelést!

**⚠ VIGYÁZAT! Akkumulátorok szakszerűtlen kezelése! Sérülésveszély!**

Üres akkumulátorokat ne aktiváljon újra, illetve ne töltsön fel (robbanás- és marásveszély)!

Az akkumulátorokat ne szedje szét, és ne rongálja meg! Az akkumulátort ne dobja tűzbe!

## Български

**⚠ ВНИМАНИЕ Горещи повърхности (> 60 °C)! Опасност от изгаряне!**

Не докосвайте метални повърхности (например радиатори). Съблюдавайте времето на охлаждане на задвижващите компоненти (мин. 15 минути).

**⚠ ВНИМАНИЕ Неправилно боравене по време на транспорт и монтаж! Опасност от нараняване!**

Използвайте подходящо монтажно и транспортно оборудване.

Използвайте подходящи инструменти и лични предпазни средства.

**⚠ ВНИМАНИЕ Неправилно боравене с батерии! Опасност от нараняване!**

Не се опитвайте да активирате отново или да зареждате разредени батерии (Опасност от експлозия и напръскване с агресивен агент).

Не разглобявайте и не повреждайте батерии. Не хвърляйте батерии в огън.

## Latviski

**⚠ UZMANĪBU Karstas virsmas (> 60 °C)! Apdedzināšanās risks!**

Neskarieties pie metāliskām virsmām (piemēram, dzesētāja). Ļaujiet piedziņas komponentiem atdzist (min. 15 minūtes).

**⚠ UZMANĪBU Nepareizi veikta transportēšana un montāža! Traumu gūšanas risks!**

Izmantojiet piemērotas montāžas un transportēšanas ierīces.

Izmantojiet piemērotus instrumentus un individuālos aizsardzības līdzekļus.

**⚠ UZMANĪBU Nepareiza bateriju lietošana! Traumu gūšanas risks!**

Nemēģiniet no jauna aktivizēt vai uzlādēt tukšas baterijas (eksploziju un ķīmisko apdegumu draudi).

Neizjauciet un nesabojājiet baterijas. Nemetiet baterijas ugunī.

## Lietuviškai

**⚠ ĮSPĖJIMAS Pavojus gyvybei nesilaikant toliau pateikiamų saugumo nurodymų!**

Naudokite gaminį tik kruopščiai perskaitę prie jo pridėtus aprašus, saugumo nurodymus. Susipažinkite su jais ir vadovaukitės naudodami gaminį.

Jei Jūs negavote aprašo gimtąja kalba, kreipkitės į įgaliotus Rexroth atstovus.

Prie pavaros komponentų leidžiama dirbti tik kvalifikuotam personalui.

Išsamesnius saugumo nurodymų paaiškinimus rasite šios dokumentacijos 3 skyriuje.

**⚠ ĮSPĖJIMAS Aukšta elektros įtampa! Pavojus gyvybei dėl elektros smūgio!**

Pavaros komponentus eksploatuokite tik su fiksuotai instaliuotu apsauginiu laidu.

Prieš prieidami prie pavaros komponentų išjunkite maitinimo įtampą.

Atsižvelkite į kondensatorių išsikrovimo trukmę.

## Eesti

**⚠ HOIATUS Alljärgnevate ohutusjuhiste eiramine on eluohtlik!**

Võtke tooted käiku alles siis, kui olete toodetega kaasasolevad materjalid ning ohutusjuhised täielikult läbi lugenud, neist aru saanud ja neid järginud.

Kui Teil puuduvad emakeelsed materjalid, siis pöörduge Rexrothi kohaliku müügiesinduse poole.

Ajamikomponentidega tohib töötada üksnes kvalifitseeritud personal.

Täpsemaid selgitusi ohutusjuhiste kohta leiate käesoleva dokumentatsiooni peatükist 3.

**⚠ HOIATUS Kõrge elektripinge! Eluohtlik elektrilöögi tõttu!**

Käitage ajamikomponente üksnes püsivalt installeeritud maandusega.

Lülitage enne ajamikomponentidega tööde alustamist toitepinge välja.

Järgige kondensaatorite mahalaadumisaegu.

## Ελληνικά

**⚠ ΠΡΟΕΙΔΟΠΟΙΗΣΗ Κίνδυνος θανάτου σε περίπτωση μη συμμόρφωσης με τις παρακάτω οδηγίες ασφαλείας!**

Θέστε το προϊόν σε λειτουργία αφού διαβάσετε, κατανοήσετε και λάβετε υπόψη το σύνολο των οδηγιών ασφαλείας που το συνοδεύουν.

Εάν δεν υπάρχει τεκμηρίωση στη γλώσσα σας, απευθυνθείτε σε εξουσιοδοτημένο αντιπρόσωπο της Rexroth.

Μόνο εξειδικευμένο προσωπικό επιτρέπεται να χειρίζεται στοιχεία μετάδοσης κίνησης.

Περαιτέρω επεξηγήσεις των οδηγιών ασφαλείας διατίθενται στο κεφάλαιο 3 της παρούσας τεκμηρίωσης.

**⚠ ΠΡΟΕΙΔΟΠΟΙΗΣΗ Υψηλή ηλεκτρική τάση! Κίνδυνος θανάτου από ηλεκτροπληξία!**

Θέτετε σε λειτουργία τα στοιχεία μετάδοσης κίνησης μόνο εφόσον έχει τοποθετηθεί καλά προστατευτικός αγωγός γείωσης.

Πριν από οποιαδήποτε παρέμβαση, αποσυνδέστε την τροφοδοσία των στοιχείων μετάδοσης κίνησης.

Λάβετε υπόψη τους χρόνους αποφόρτισης των πυκνωτών.

| Lietuviškai | Eesti | Ελληνικά |
|---|---|---|
| **⚠ ĮSPĖJIMAS Pavojingi judesiai! Pavojus gyvybei!**<br>Nebūkite mašinų ar jų dalių judėjimo zonoje.<br>Neleiskite netyčia patekti asmenims.<br>Prieš patekdami į pavojaus zoną saugiai išjunkite pavaras. | **⚠ HOIATUS Ohtlikud liikumised! Eluohtlik!**<br>Ärge viibige masina ja masinaosade liikumispiirkonnas.<br>Tõkestage inimeste ettekavatsematu sisenemine masina ja masinaosade liikumispiirkonda.<br>Tagage ajamite turvaline seiskamine enne ohupiirkonda juurdepääsu või sisenemist. | **⚠ ΠΡΟΕΙΔΟΠΟΙΗΣΗ Επικίνδυνες τάσεις! Κίνδυνος θανάτου!**<br>Μην στέκεστε στην περιοχή κίνησης μηχανημάτων και εξαρτημάτων.<br>Αποτρέπετε την τυχαία είσοδο ατόμων.<br>Πριν από την παρέμβαση ή πρόσβαση στην περιοχή κινδύνου, μεριμνήστε για την ασφαλή ακινητοποίηση των συστημάτων μετάδοσης κίνησης. |
| **⚠ ĮSPĖJIMAS Elektromagnetiniai / magnetiniai laukai! Pavojus asmenų su širdies stimuliatoriais, metaliniais implantais arba klausos aparatais sveikatai!**<br>Prieiga prie zonų, kuriose montuojami ir eksploatuojami pavaros komponentai, aukščiau nurodytiems asmenims yra draudžiama arba leistina tik pasitarus su gydytoju. | **⚠ HOIATUS Elektromagnetilised / magnetilised väljad! Terviseohtlik südamestimulaatorite, metallimplantaatide ja kuulmisseadmetega inimestele!**<br>Sisenemine piirkondadesse, kus toimub ajamikomponentide monteerimine ja käitamine, on ülalnimetatud isikutele keelatud või lubatud üksnes pärast arstiga konsulteerimist. | **⚠ ΠΡΟΕΙΔΟΠΟΙΗΣΗ Ηλεκτρομαγνητικά/ μαγνητικά πεδία! Κίνδυνος για την υγεία ατόμων με καρδιακούς βηματοδότες, μεταλλικά εμφυτεύματα ή συσκευές ακοής!**<br>Η είσοδος σε περιοχές όπου πραγματοποιείται συναρμολόγηση και λειτουργία στοιχείων μετάδοσης κίνησης απαγορεύεται στα προαναφερθέντα άτομα, εκτός αν τους έχει δοθεί σχετική άδεια κατόπιν συνεννόησης με γιατρό. |
| **⚠ PERSPĖJIMAS Karšti paviršiai (> 60 °C)! Nudegimo pavojus!**<br>Venkite liesti metalinius paviršius (pvz., radiatorių). Išlaikykite pavaros komponentų atvėsimo trukmę (bent 15 minučių). | **⚠ ETTEVAATUST Kuumad välispinnad (> 60 °C)! Põletusoht!**<br>Vältige metalsete välispindade (nt radiaatorid) puudutamist. Pidage kinni ajamikomponentide mahajahtumisajast (vähemalt 15 minutit). | **⚠ ΠΡΟΣΟΧΗ Καυτές επιφάνειες (> 60 °C)! Κίνδυνος εγκαύματος!**<br>Αποφεύγετε την επαφή με μεταλλικές επιφάνειες (π.χ. μονάδες ψύξης). Λάβετε υπόψη το χρόνο ψύξης των στοιχείων μετάδοσης κίνησης (τουλάχιστον 15 λεπτά). |
| **⚠ PERSPĖJIMAS Netinkamas darbas transportuojant ir montuojant! Susižalojimo pavojus!**<br>Naudokite tinkamus montavimo ir transportavimo įrenginius.<br>Naudokite tinkamus įrankius ir asmens saugos priemones. | **⚠ ETTEVAATUST Asjatundmatu käsitsemine transportimisel ja montaažil! Vigastusoht!**<br>Kasutage sobivaid montaaži- ja transpordiseadiseid.<br>Kasutage sobivaid tööriistu ja isiklikku kaitsevarustust. | **⚠ ΠΡΟΣΟΧΗ Ακατάλληλος χειρισμός κατά τη μεταφορά και συναρμολόγηση! Κίνδυνος τραυματισμού!**<br>Χρησιμοποιείτε κατάλληλους μηχανισμούς συναρμολόγησης και μεταφοράς.<br>Χρησιμοποιείτε κατάλληλα εργαλεία και ατομικό εξοπλισμό προστασίας. |
| **⚠ PERSPĖJIMAS Netinkamas darbas su baterijomis! Susižalojimo pavojus!**<br>Nebandykite tuščių baterijų reaktyvuoti arba įkrauti (sprogimo ir išėsdinimo pavojus).<br>Neardykite ir nepažeiskite baterijų. Nemeskite baterijų į ugnį. | **⚠ ETTEVAATUST Patareide asjatundmatu käsitsemine! Vigastusoht!**<br>Ärge üritage kunagi tühje patareisid reaktiveerida või täis laadida (plahvatus- ja söövitusoht).<br>Ärge demonteerige ega kahjustage patareisid. Ärge visake patareisid tulle. | **⚠ ΠΡΟΣΟΧΗ Ακατάλληλος χειρισμός μπαταριών! Κίνδυνος τραυματισμού!**<br>Μην επιδιώκετε να ενεργοποιήσετε ξανά ή να φορτίσετε κενές μπαταρίες (κίνδυνος έκρηξης και διάβρωσης).<br>Μην διαλύετε ή καταστρέφετε τις μπαταρίες. Μην απορρίπτετε τις μπαταρίες στη φωτιά. |

| عربى | Hrvatski | Indonesia |
|---|---|---|
| ⚠ تحذير<br>**خطر على الحياة في حالة عدم-الالتزام بتعليمات السلامة المذكورة أدناه!**<br>لا تحاول تركيب هذه المنتجات أو تشغيلها حتى تقرأ الوثائق المرفقة مع المنتج وتفهمها وتلتزم بها تمامًا.<br>إذا لم تتوفر وثائق بلغتك، يُرجى الرجوع إلى شريك المبيعات Rexroth لديك.<br>لا يجوز العمل باستخدام مكونات المحرك إلا للأشخاص المؤهلين فقط.<br>للحصول على معلومات توضيحية تفصيلية حول تعليمات السلامة، راجع الفصل 3 من هذه الوثيقة. | ⚠ UPOZORENJE **Opasnost po život u slučaju nepridržavanja sigurnosnih uputa u nastavku!**<br>Ne pokušavajte instalirati ili puštati ove proizvode u rad ako niste u potpunosti pročitali, razumjeli i uzeli u obzir dokumente isporučene s proizvodom.<br>Ako dokumenti nisu isporučeni na vašem jeziku, obratite se svojem prodajnom partneru poduzeća Rexroth.<br>Samo kvalificirane osobe smiju raditi s pogonskim dijelovima.<br>Detaljna objašnjenja sigurnosnih uputa potražite u 3. poglavlju ove dokumentacije. | ⚠ PERINGATAN **Dapat membahayakan nyawa jika tidak patuh terhadap petunjuk keselamatan yang disebutkan di bawah ini!**<br>Jangan mencoba memasangkan atau mengoperasikan produk ini hingga Anda selesai membaca, memahami, dan mengamati dokumen yang disertakan dengan produk.<br>Jika dokumen dalam bahasa Anda tidak tersedia, harap hubungi mitra penjualan Rexroth Anda.<br>Hanya orang yang berkualifikasi saja yang boleh bekerja dengan komponen penggerak.<br>Untuk penjelasan yang lebih terperinci mengenai petunjuk keselamatan, harap rujuk bab 3 dari dokumentasi ini. |
| ⚠ تحذير<br>**جهد كهربائي عالٍ! خطر على الحياة بسبب صدمة كهربائية!**<br>لا تقم بتشغيل مكونات المحرك إلا مع موصل تأريض المعدات مُركَّب دائمًا فقط.<br>افصل مصدر إمداد الطاقة قبل الوصول إلى مكونات المحرك.<br>قم بمراقبة أوقات تفريغ المكثفات. | ⚠ UPOZORENJE **Visok električni napon! Opasnost po život uslijed strujnog udara!**<br>Rukujte pogonskim dijelovima samo ako oprema ima trajno instaliran vodič uzemljenja.<br>Prije pristupa pogonskim dijelovima isključite napajanje.<br>Obratite pozornost na vremena pražnjenja kondenzatora. | ⚠ PERINGATAN **Tegangan listrik tinggi! Membahayakan nyawa karena kejutan listrik!**<br>Hanya operasikan komponen penggerak dengan konduktor arde perlengkapan yang telah dipasang secara permanen.<br>Putuskan koneksi catu daya sebelum mengakses komponen penggerak.<br>Amati waktu pelepasan kapasitor. |
| ⚠ تحذير<br>**حركات خطيرة! خطر على الحياة!**<br>ابقِ نطاقات حركة الماكينات وأجزاء الماكينة المتحركة خالية من أي إعاقات.<br>امنع الموظفين من الدخول إلى نطاق حركة الماكينات عن طريق الخطأ.<br>تأكد من أن المحركات في وضع التوقف التام الآمن قبل الدخول إلى منطقة الخطر أو العمل بها. | ⚠ UPOZORENJE **Opasni pokreti! Opasnost po život!**<br>Držite se podalje od opsega kretanja strojeva i pokretnih dijelova strojeva.<br>Spriječite da osoblje slučajno uđe u opseg kretanja strojeva.<br>Prije nego što pristupite ili uđete u zonu opasnosti, provjerite jesu li se svi pogoni sigurno zaustavili. | ⚠ PERINGATAN **Pergerakan berbahaya! Membahayakan nyawa!**<br>Jaga jarak sesuai rentang gerakan mesin dan bagian mesin yang bergerak.<br>Cegah personel dari memasuki rentang gerakan mesin secara tidak sengaja.<br>Pastikan bahwa penggerak telah berada dalam posisi henti yang aman sebelum mengakses atau memasuki zona berbahaya. |

| عربى | Hrvatski | Indonesia |
|---|---|---|
| ⚠ تحذير<br>**المجالات الكهرومغناطيسية / المغناطيسية! مخاطر صحية عى الأشخاص الذين يستخدمون أجهزة تنظيم ضربات القلب، أو الأعضاء الصناعية المزروعة أو سماعات الأذن!**<br><br>لا يُسمح للأشخاص المذكورين أعلاه بالدخول إلى المناطق التي يتم فيها تركيب مكونات المحرك وتشغيلها، أو لا يُسمح لهم بالقيام بذلك إلا بعد استشارة طبيب. | ⚠UPOZORENJE **Elektromagnetska/magnetska polja!**<br><br>Opasnost za zdravlje osoba sa srčanim stimulatorima, metalnim implantatima ili slušnim pomagalima!<br><br>Prethodno spomenute osobe ne smiju ulaziti u područja u kojima su pogonski dijelovi montirani i rade ili to smiju samo ako im je dopustio liječnik. | ⚠PERINGATAN **Medan elektromagnetik / magnetik!**<br><br>Risiko kesehatan bagi individu dengan alat pacu jantung, implan logam, atau alat bantu pendengaran!<br><br>Orang yang disebutkan di atas tidak diperbolehkan masuk ke area di mana komponen penggerak dipasangkan dan dioperasikan, atau hanya diperbolehkan untuk melakukannya setelah berkonsultasi dengan dokter. |
| ⚠ تنبيه<br>**الأسطح الساخنة (> 60 درجة مئوية [140 درجة فهرنهايت]) خطر الإصابة بحروق!**<br><br>تجنب لمس الأسطح المعدنية (مثل المصارف الحرارية). التزم بالوقت اللازم لتبريد مكونات المحرك (15 دقيقة على الأقل). | ⚠OPREZ **Vruće površine (> 60 °C [140 °F])! Opasnost od opeklina!**<br><br>Ne dirajte metalne površine (npr. hladnjake). Pridržavajte se vremena koje je potrebno za hlađenje pogonskih dijelova (najmanje 15 minuta). | ⚠PERHATIAN **Permukaan panas (> 60°C [140°F]) ! Risiko luka bakar!**<br><br>Jangan sentuh permukaan logam (mis., alat pembuang panas). Patuhi waktu yang diperlukan komponen penggerak untuk menurunkan suhu (setidaknya 15 menit). |
| ⚠ تنبيه<br>**التعامل غير السليم أثناء النقل والتركيب! خطر الإصابة!**<br><br>استخدم معدات مناسبة للتركيب والنقل.<br><br>استخدم الأدوات ومعدات الحماية الشخصية المناسبة. | ⚠OPREZ **Neispravno rukovanje tijekom transporta i montaže! Opasnost od ozljeda!**<br><br>Upotrebljavajte prikladnu opremu za montažu i transport.<br><br>Upotrebljavajte prikladne alate i osobnu zaštitnu opremu. | ⚠PERHATIAN **Penanganan yang tidak tepat selama transportasi dan pemasangan! Risiko cedera!**<br><br>Gunakan perlengkapan yang tepat untuk pemasangan dan transportasi.<br><br>Gunakan peralatan dan perlengkapan perlindungan pribadi yang tepat. |
| ⚠ تنبيه<br>**سوء استعمال البطاريات! خطر الإصابة!**<br><br>تجنب إعادة تنشيط البطاريات المنخفضة أو إعادة شحنها (خطر الانفجار وخطر الإصابة بحروق كيميائية).<br><br>تجنب فك البطاريات أو إتلافها. تجنب إلقاء البطاريات في النيران المكشوفة. | ⚠OPREZ **Neispravno rukovanje baterijama! Opasnost od ozljeda!**<br><br>Ne pokušavajte ponovo aktivirati ili puniti ispražnjene baterije (opasnost od eksplozije ili kemijskih opeklina).<br><br>Ne rastavljajte ni oštećujte baterije. Ne bacajte baterije u otvorenu vatru. | ⚠PERHATIAN **Penangan baterai yang tidak tepat! Risiko cedera!**<br><br>Jangan mencoba untuk mengaktifkan kembali atau mengisi daya baterai yang rendah (risiko ledakan dan luka bakar kimiawi).<br><br>Jangan melepaskan atau merusak baterai. Jangan buang baterai ke api terbuka. |

| 日本語 | 한국어 | Malti |
|---|---|---|
| **⚠警告 下記の安全指示に従わない場合、命に関わる恐れがあります！**<br>製品付属のドキュメントをすべて読み、理解し確認するまでこれらの製品をインストールまたは動作させないでください。<br>お使いの言語のドキュメントが提供されていない場合、Rexroth のセールスパートナーにご相談ください。<br>ドライブコンポーネントを扱えるのは有資格者のみです。<br>安全に関する指示詳細については、本マニュアル第 3 章を参照してください。 | **⚠경고 아래에 언급된 안전 지침을 준수하지 않을 경우 생명의 위험이 있습니다!**<br>제품과 함께 제공된 문서를 읽고 내용을 이해하며 파악하기 전까지 제품을 설치하거나 작동해서는 안 됩니다.<br>해당 언어로 된 문서가 제공되지 않은 경우 Rexroth 판매 파트너에게 문의하시기 바랍니다.<br>자격을 갖춘 사람만 드라이브 구성 요소를 사용할 수 있습니다.<br>안전 지침에 대한 자세한 설명은 이 설명서의 3장을 참조하시기 바랍니다. | **⚠TWISSIJA Periklu għall-ħajja f'każ ta' nuqqas ta' konformità mal-istruzzjonijiet dwar is-sigurtà msemmija hawn taħt!**<br>Tippruvax twaħħal jew tħaddem dawn il-prodotti qabel ma tkun qrajt, fhimt u osservajt kompletament id-dokumenti pprovduti mal-prodott.<br>Jekk ma ġie pprovdut l-ebda dokument bil-lingwa tiegħek, jekk jogħġbok ikkonsulta mas-sieħeb tiegħek tal-bejgħ ta' Rexroth.<br>Persuni kwalifikati biss jistgħu jaħdmu b'komponenti tat-trażmissjoni.<br>Għal spjegazzjonijiet dettaljati dwar l-istruzzjonijiet rigward is-sigurtà, ara l-kapitolu 3 ta' din id-dokumentazzjoni. |
| **⚠警告 高電圧！感電による命の危険があります！**<br>装置のアース線が取り付けられたドライブコンポーネントのみを動作させてください。<br>ドライブコンポーネントにアクセスする前に電源をお切りください。<br>コンデンサの放電時間をご確認ください。 | **⚠경고 고전압! 감전으로 인한 생명의 위험!**<br>영구적으로 설치된 장비 접지 도체를 통해서만 구동 구성 요소를 작동하십시오.<br>드라이브 구성 요소에 액세스하기 전에 전원 공급 장치를 분리하십시오.<br>캐패시터의 방전 시간을 준수하십시오. | **⚠TWISSIJA Vultaġġ elettriku għoli! Periklu għall-ħajja minħabba xokk elettriku!**<br>Ħaddem biss komponenti tat-trażmissjoni b'tagħmir tal-ert installat b'mod permanenti.<br>Skonnettja l-provvista tal-enerġija qabel ma taċċessa l-komponenti tat-trażmissjoni.<br>Osserva l-ħinijiet ta' skariku tal-kapaċitaturi. |
| **⚠警告 危険な動きです！命の危険！**<br>機械および可動機械部品の動作範囲から離れてください。<br>作業員が機械の可動範囲に誤って入らないようにしてください。<br>危険域への立ち入りや侵入前に、ドライブが安全に停止していることをご確認ください。 | **⚠경고 이동 위험! 생명의 위험!**<br>기계와 기계 부품은 움직이는 범위가 여유롭도록 멀리 두십시오.<br>직원이 기계 작동 범위에 들어가지 않도록 하십시오.<br>위험 구역에 접근하거나 진입하기 전에 드라이브가 안전하게 정지되었는지 확인하십시오. | **⚠TWISSIJA Movimenti perikolużi! Periklu għall-ħajja!**<br>Żomm 'il bogħod u ħalli distanza miż-żoni ta' moviment tal-magni u tal-partijiet tal-magni li jiċċaqilqu.<br>Tħallix lill-persunal jidħol bi żball fiż-żona ta' moviment tal-magni.<br>Kun żgur li l-magni ta' trażmissjoni jitwaqqfu b'mod sikur qabel ma taċċessa jew tidħol fiż-żona ta' periklu. |
| **⚠警告 電磁/磁界！**<br>心臓ペースメーカー、金属インプラントまたは補聴器を使用している方の健康被害の恐れがあります！<br>上記の方々は、ドライブの部品の取り付けや操作場所に立ち入ることはできません。立ち入る前に医師にご相談ください。 | **⚠경고 전자기장 / 자기장!**<br>심장 박동 조절기, 금속 이식물 또는 보청기를 사용하는 사람의 건강 위험!<br>위에 언급된 사람은 드라이브 구성 요소가 장착되고 작동하는 구역에 들어갈 수 없으며, 의사와 상담한 후에만 이 작업을 수행할 수 있습니다. | **⚠TWISSIJA Kampi elettromanjetiċi / manjetiċi!**<br>Periklu għas-saħħa għal persuni b'pacemakers kardijaċi, apparat mediku tal-metall impjantabbli jew apparat għas-smigħ!<br>Dawn il-persuni msemmija hawn fuq ma jistgħux jitħallew jidħlu f'żoni fejn jiġi mmuntati u jitħaddmu komponenti tat-trażmissjoni, jew inkella għandhomjitħallew jagħmlu dan biss wara li jkunu kkonsultaw tabib. |

| 日本語 | 한국어 | Malti |
|---|---|---|
| **⚠注意 熱い表面 (>60°C [140°F]) ！火傷の恐れがあります！**<br>金属面 (例: ヒートシンク) には触れないでください。ドライブコンポーネントの冷却に必要な時間を遵守してください (最短 15 分)。 | **⚠주의 뜨거운 표면 (60°C [140°F] 이상)! 화상의 위험!**<br>금속 표면(예: 열 싱크)을 만지지 마십시오. 드라이브 구성 요소가 식는 데 소요되는 시간(최소 15분)을 준수하십시오. | **⚠ATTENZJONI Uċuħ jaħarqu (> 60 °C [140 °F])! Riskju ta' ħruq!**<br>Tmissx uċuħ metalliċi (eż. dissipaturi tas-sħana). Ħalli l-ħin meħtieġ biex il-komponenti tat-trażmissjoni jiksħu (tal-anqas 15-il minuta). |
| **⚠注意 不適切な運搬・取り付け時の取扱いについて！けがの恐れがあります！**<br>取り付けおよび運搬には適切な器材をお使いください。<br>適切な工具および個人用保護具をお使いください。 | **⚠주의 운반 및 장착 시 부적절한 취급! 부상 위험!**<br>장착 및 운반에 적합한 장비를 사용하십시오.<br>적절한 공구와 개인 보호 장비를 사용하십시오. | **⚠ATTENZJONI Immaniġġar mhux xieraq matul it-trasport u l-immuntar! Riskju ta' korriment!**<br>Agħmel użu minn tagħmir xieraq għall-immuntar u t-trasport.<br>Agħmel użu minn għodda u tagħmir protettiv personali xieraq. |
| **⚠注意 不適切なバッテリの取り扱いについて！けがの恐れがあります！**<br>ローバッテリ時 (爆発や化学熱傷の恐れ) の再起動や再充電は行わないでください。<br>電池を分解・破損させないでください。火気にバッテリを投げ込まないでください。 | **⚠주의 배터리의 부적절한 취급! 부상 위험!**<br>소진된 배터리를 재활성화하거나 재충전하지 마십시오(폭발 및 화학적 화상의 위험).<br>배터리를 분해하거나 손상시키지 마십시오. 배터리를 화염에 던지지 마십시오. | **⚠ATTENZJONI Immaniġġar mhux xieraq ta' batteriji! Riskju ta' korriment!**<br>Tippruvax terġa' tattiva jew terġa' tiċċarġja batteriji baxxi (riskju ta' splużjoni u ħruq kimiku).<br>Iżżarmax jew tagħmel ħsara lill-batteriji. Titfax batteriji fi fjammi mikxufa. |

| Norsk | Русский | ไทย |
|---|---|---|
| **⚠ADVARSEL Livsfare ved manglende overholdelse av de nevnte sikkerhetsinstruksjonene!**<br>Ikke prøv å installere eller ta i bruk disse produktene før du har lest, forstått og overholdt dokumentene som fulgte med produktet.<br>Hvis det ikke ble levert noen dokumenter på språket ditt, tar du kontakt med Rexroth-salgspartneren.<br>Bare kvalifiserte personer kan arbeide med drevkomponenter.<br>For detaljerte forklaringer på sikkerhetsinstruksjonene, se kapittel 3 i denne dokumentasjonen. | **⚠ОСТОРОЖНО Опасность для жизни в случае несоблюдения приведенных далее правил техники безопасности!**<br>Не пытайтесь устанавливать или вводить данные изделия в эксплуатацию, прежде чем полностью прочтете и усвоите документацию, поставляемую с изделием, а также обязуетесь соблюдать ее требования.<br>Если документация на вашем языке отсутствует, обратитесь к своему партнеру по продажам Rexroth.<br>К работе с компонентами привода допускаются только лица, обладающие соответствующей квалификацией.<br>Подробное объяснение правил техники безопасности приводится в главе 3 настоящей документации. | **⚠คำเตือน อันตรายถึงชีวิตในกรณีที่ไม่ปฏิบัติตามคำแนะนำด้านความปลอดภัยที่ระบุไว้ด้านล่าง!**<br>อย่าพยายามติดตั้งหรือนำผลิตภัณฑ์เหล่านี้ไปใช้งานจนกว่าคุณจะอ่าน ทำความเข้าใจ และปฏิบัติตามเอกสารที่ให้มาพร้อมกับผลิตภัณฑ์อย่างสมบูรณ์<br>หากไม่มีเอกสารในภาษาของคุณมาพร้อมกับผลิตภัณฑ์ โปรดปรึกษาพันธมิตรด้านการขายของ Rexroth<br>เฉพาะบุคคลที่มีคุณสมบัติเท่านั้นที่สามารถทำงานกับส่วนประกอบของไดรฟ์ได้<br>สำหรับคำอธิบายโดยละเอียดเกี่ยวกับคำแนะนำด้านความปลอดภัย โปรดดูบทที่ 3 ของเอกสารนี้ |

| Norsk | Русский | ไทย |
|---|---|---|
| **⚠ADVARSEL Høy elektrisk spenning! Livsfare på grunn av elektrisk støt!**<br>Bruk bare drevkomponenter med en permanent installert jordingsleder.<br>Koble fra strømforsyningen før du går inn på drevkomponenter.<br>Observer kondensatorens utladningstid. | **⚠ОСТОРОЖНО Высокое электрическое напряжение! Опасность для жизни вследствие удара электрическим током!**<br>Эксплуатация компонентов привода допускается только при наличии стационарно установленного провода заземления оборудования.<br>Перед доступом к компонентам привода отключите электропитание.<br>Учитывайте время, необходимое для разрядки конденсаторов. | **⚠คำเตือน ไฟฟ้าแรงสูง! อันตรายถึงชีวิตจากไฟฟ้าดูด!**<br>ใช้งานส่วนประกอบของไดรฟ์ที่มีตัวนำต่อสายดินของอุปกรณ์ที่ติดตั้งถาวรเท่านั้น<br>ตัดการเชื่อมต่อแหล่งจ่ายไฟก่อนเข้าถึงส่วนประกอบของไดรฟ์<br>ปฏิบัติตามเวลาในการคายประจุของตัวเก็บประจุ |
| **⚠ADVARSEL Farlige bevegelser! Fare for liv!**<br>Hold deg unna bevegelsesområdet til maskiner og bevegelige maskindeler.<br>Forhindre at personell utilsiktet begir seg inn på maskinens bevegelsesområde.<br>Forsikre deg om at drevene er stanset trygt før du begir deg inn på faresonen. | **⚠ОСТОРОЖНО Опасные движения! Опасность для жизни!**<br>Не находитесь в зоне движения машин и их деталей.<br>Не допускайте случайного входа персонала в зону движения машин.<br>Перед входом или иным доступом в опасную зону убедитесь в том, что все приводы остановлены с учетом требований безопасности. | **⚠คำเตือน การเคลื่อนไหวที่อันตราย! อันตรายถึงชีวิต!**<br>รักษาช่วงการเคลื่อนที่ของเครื่องจักรและชิ้นส่วนเครื่องจักรที่เคลื่อนที่ให้สะอาดและปราศจากสิ่งกีดขวางเสมอ<br>ป้องกันไม่ให้บุคลากรเข้าสู่ช่วงการเคลื่อนที่ของเครื่องจักรโดยไม่ได้ตั้งใจ<br>ตรวจสอบให้แน่ใจว่าไดรฟ์หยุดนิ่งอย่างปลอดภัยก่อนเข้าถึงหรือเข้าสู่เขตอันตราย |
| **⚠ADVARSEL Elektromagnetiske/magnetiske felt!**<br>Helsefare for personer med hjertestarter, metallimplantater eller høreapparater!<br>Ovennevnte personer har ikke adgang til områder der drevkomponenter er montert og betjent, eller rettere sagt bare lov til å gjøre dette etter at de har konsultert lege. | **⚠ОСТОРОЖНО Электромагнитные/магнитные поля!**<br>Опасность для здоровья лиц с кардиостимуляторами, металлическими имплантатами или слуховыми аппаратами!<br>Доступ вышеуказанных лиц в зоны, в которых установлены и эксплуатируются компоненты привода, запрещается или же возможен только при условии предварительной консультации с врачом. | **⚠คำเตือน สนามแม่เหล็กไฟฟ้า/สนามแม่เหล็ก!**<br>อันตรายต่อสุขภาพสำหรับผู้ที่ใช้เครื่องกระตุ้นไฟฟ้าหัวใจ การปลูกถ่ายโลหะ หรือเครื่องช่วยฟัง!<br>บุคคลดังกล่าวข้างต้นไม่ได้รับอนุญาตให้เข้าไปในบริเวณที่ติดตั้งและใช้งานส่วนประกอบของไดรฟ์ หรือได้รับอนุญาตให้ดำเนินการได้หลังจากปรึกษาแพทย์แล้วเท่านั้น |
| **⚠FORSIKTIG Varme overflater ((> 60 °C [140 °F])! Fare for brannskader!**<br>Ikke berør metalloverflater (f.eks. varmeavleder). Følg tiden det tar for avkjøling av drevkomponentene (minst 15 minutter). | **⚠ВНИМАНИЕ Горячие поверхности (> 60 °C [140 °F]): опасность ожогов!**<br>Запрещается касаться металлических поверхностей (например, теплоотводов). Учитывайте время, необходимое компонентам привода для остывания (не менее 15 минут). | **⚠ข้อควรระวัง พื้นผิวที่ร้อน (> 60 °C [140 °F]) ! เสี่ยงต่อการเกิดแผลไหม้!**<br>อย่าสัมผัสพื้นผิวโลหะ (เช่น แผงระบายความร้อน) ปฏิบัติตามเวลาที่ต้องการเพื่อให้ส่วนประกอบของไดรฟ์เย็นลง (อย่างน้อย 15 นาที) |
| **⚠FORSIKTIG Feil håndtering under transport og montering! Fare for personskade!**<br>Bruk egnet utstyr for montering og transport.<br>Bruk egnet verktøy og personlig verneutstyr. | **⚠ВНИМАНИЕ Неправильное обращение во время транспортировки и монтажа! Опасность травм!**<br>Используйте подходящее оборудование для монтажа и транспортировки.<br>Используйте подходящие инструменты и средства индивидуальной защиты. | **⚠ข้อควรระวัง การจัดการที่ไม่เหมาะสมระหว่างการขนส่งและการติดตั้ง! เสี่ยงต่อการบาดเจ็บ!**<br>การจัดการที่ไม่เหมาะสมระหว่างการขนส่งและการติดตั้ง! เสี่ยงต่อการบาดเจ็บ!<br>ใช้เครื่องมือและอุปกรณ์ป้องกันอันตรายส่วนบุคคลที่เหมาะสม |

| Norsk | Русский | ไทย |
|---|---|---|
| **⚠FORSIKTIG Feil håndtering av batterier! Fare for personskade!**<br>Ikke prøv å aktivere på nytt eller lade opp svake batterier (fare for eksplosjon og kjemiske forbrenninger).<br>Ikke demonter eller ødelegg batteriene. Ikke kast batteriene i åpen ild. | **⚠ВНИМАНИЕ Неправильное обращение с батареями! Опасность травм!**<br>Не пытайтесь повторно активировать или перезаряжать батареи с низким уровнем заряда (опасность взрыва и химических ожогов).<br>Не разбирайте и не повреждайте батареи. Не бросайте батареи в открытое пламя. | **⚠ข้อควรระวัง การจัดการของแบตเตอรี่อย่างไม่เหมาะสม! เสี่ยงต่อการบาดเจ็บ!**<br>อย่าพยายามเปิดใช้งานใหม่หรือชาร์จแบตเตอรี่ที่เหลือน้อย (เสี่ยงต่อการระเบิดและการไหม้ของสารเคมี)<br>อย่าถอดหรือทำให้แบตเตอรี่เสียหาย อย่าทิ้งแบตเตอรี่ลงในเปลวไฟ |

| Türkçe | Gaeilge | 中文 |
|---|---|---|
| **⚠UYARI Aşağıda belirtilen emniyet talimatlarına uyulmaması durumunda hayati tehlike!**<br>Ürünle birlikte verilen belgeleri tümüyle okumadan, anlamadan ve bunlara uymadan bu ürünleri monte etmeye veya kullanıma almaya çalışmayın.<br>Kendi dilinizde herhangi bir belge sağlanmadıysa, lütfen Rexroth satış ortağınızla görüşün.<br>Sürücü bileşenleri üzerinde sadece kalifiye kişiler çalışabilir.<br>Emniyet talimatlarıyla ilgili ayrıntılı açıklamalar için, bu dokümantasyonun 3. bölümüne bakın. | **⚠RABHADH Contúirt don bheatha i gcás neamhchomhlíonadh maidir leis na treoracha sábháilteacht thíos!**<br>Ná déan iarracht na táirgí seo a shuiteáil nó a oibriú go dtí go mbeidh na doiciméid a soláthraíodh leis an táirge léite agus tuigthe go hiomlán agat agus go gcloífidh tú go hiomlán leo.<br>Murar cuireadh doiciméid ar bith ar fáil i do theanga, téigh i gcomhairle le do chomhpháirtí díolacháin Rexroth le do thoil.<br>Ní féidir ach le daoine cáilithe oibriú leis na comhpháirteanna tiomána.<br>Le haghaidh mínithe mionsonraithe maidir leis na treoracha sábháilteachta, féach caibidil 3 den doiciméadúchán seo. | **⚠警告 如果不按照下述指定的安全说明使用，将会导致人身伤害！**<br>在没有阅读，理解随本产品附带的文件并熟知正当使用前，不要安装或使用本产品。<br>如果没有您所在国家官方语言文件说明，请与 Rexroth 销售伙伴联系。<br>只允许有资格人员对驱动器部件进行操作。<br>安全说明的详细解释在本文档的第三章。 |
| **⚠UYARI Yüksek elektrik gerilimi! Elektrik çarpması sonucu hayati tehlike!**<br>Tahrik bileşenlerini sadece kalıcı olarak monte edilmiş ekipman topraklama iletkeniyle çalıştırın.<br>Sürücü bileşenlerine erişmeden önce güç kaynağının bağlantısını kesin.<br>Kapasitörlerin deşarj sürelerini dikkate alın. | **⚠RABHADH Voltas leictreach ard! Contúirt don bheatha trí thurraing leictreach!**<br>Ná hoibrigh comhpháirteanna tiomána ach le seoltóir talmhaithe trealaimh buansuiteáilte.<br>Dícheangail an soláthar cumhachta sula ndéanfaidh tú na comhpháirteanna tiomána a rochtain.<br>Cloígh le hagaí díluchtaithe na dtoilleoirí. | **⚠警告 高电压！电击导致生命危险！**<br>只有在安装了永久良好的设备接地导线后才可以对驱动器的部件进行操作。<br>在接触驱动器部件前先将驱动器部件断电。<br>确保电容放电时间。 |
| **⚠UYARI Tehlikeli hareketler! Hayati tehlike!**<br>Makinelerin hareket alanlarından ve hareketli makine parçalarından hareket aralıklarından uzak ve açıkta durun.<br>Personelin yanlışlıkla makinelerin hareket alanına girmelerini önleyin.<br>Tehlikeli bölgeye erişmeden veya girmeden önce sürücülerin emniyetli bir şekilde durdurulduğundan emin olun. | **⚠RABHADH Gluaiseachtaí dainséaracha! Contúirt don bheatha!**<br>Coinnigh siar agus amach ó raon gluaisne na meaisíní agus ó chodanna den mheaisín a bhogann.<br>Ná lig don phearsanra dul isteach i raon gluaisne na meaisíní.<br>Cinntigh go mbeidh na tiomántáin ina stad go sábháilte sula ndéanfaidh tú an crios dainséarach a rochtain nó a iontráil. | **⚠警告 危险运动！生命危险！**<br>保证设备的运动区域内和移动部件周围无障碍物。<br>防止人员意外进入设备运动区域内。<br>在接近或进入危险区域之前，确保传动设备安全停止。 |

| Türkçe | Gaeilge | 中文 |
|---|---|---|
| **⚠UYARI Elektro manyetik / manyetik alanlar!**<br>Kalp pili, metal implantlar veya işitme cihazı kullananlar için sağlık tehlikesi!<br>Yukarıda bahsedilen kişilerin, tahrik bileşenlerinin monte edildiği ve çalıştırıldığı alanlara girmelerine izin verilmez ya da sadece doktora danıştıktan sonra girmelerine izin verilir. | **⚠RABHADH Réimsí leictreamaighnéadacha / maighnéadacha!**<br>Guais sláinte do dhaoine ag a bhfuil séadairí, ionchlannáin mhiotail nó áiseanna éisteachta!<br>Níl cead ag na daoine thuasluaite dul isteach i láithreacha ina bhfuil comhpháirteanna tiomána feistithe agus oibrithe, nó seachas sin níl cead acu é sin a dhéanamh ach i ndiaidh dóibh dul i gcomhairle le dochtúir. | **⚠警告 电磁场/磁场！对佩戴心脏起搏器、金属植入物和助听器的人员会造成严重的人身伤害！**<br>上述人员禁止进入安装及运行的驱动器区域，或者必须事先咨询医生。 |
| **⚠DİKKAT Sıcak yüzeyler (> 60 °C[140 °F]) Yanma riski!**<br>Metalik yüzeylere dokunmayın (örn. soğutucular). Sürücü bileşenlerinin soğuması için gereken süreye (en az 15 dakika) uyun. | **⚠FAICHILL Dromchlaí teo (> 60 °C [140 °F]) ! Baol dó!**<br>Ná bain do dhromchlaí miotalacha (e.g. doirtil téimh). Cloígh leis an am a theastaíonn do na comhpháirteanna tiomána fuarú (15 nóiméad ar a laghad). | **⚠小心 热表面（大于 60 度）！灼伤风险！**<br>不要触摸金属表面（例如散热器）。驱动器部件断电后需要时间进行冷却（至少 15 分钟）。 |
| **⚠DİKKAT Nakliye ve montaj sırasında yanlış taşıma! Yaralanma riski!**<br>Montaj ve nakliye için uygun ekipman kullanın.<br>Uygun aletler ve kişisel koruyucu ekipman kullanın. | **⚠FAICHILL Láimhseáil mhíchuí le linn iompair agus feistithe! Baol gortaithe!**<br>Bain úsáid as trealamh oiriúnach le haghaidh iompair agus feistithe.<br>Bain úsáid as uirlisí agus trealamh cosanta pearsanta oiriúnach. | **⚠小心 安装和运输不当导致受伤危险！当心受伤！**<br>使用适当的运输和安装设备。<br>使用适合的工具及用适当的防护设备。 |
| **⚠DİKKAT Akülerin yanlış taşınması! Yaralanma riski!**<br>Düşük seviyedeki aküleri yeniden aktifleştirmeye veya şarj etmeye çalışmayın (patlama ve kimyasal yanık riski).<br>Aküleri sökmeyin veya hasar vermeyin. Aküleri açık aleve atmayın. | **⚠FAICHILL Láimhseáil mhíchuí ceallraí! Baol gortaithe!**<br>Ná déan iarracht ceallraí ísle a athghníomhachtú nó a athluchtú (baol pléasctha agus dónna ceimiceán).<br>Ná déan na ceallraí a díchóimeáil nó ná déan damáiste díobh. Ná caith ceallraí isteach i mbladhairí oscailte. | **⚠小心 电池操作不当！受伤风险！**<br>请勿对低电量电池重新激活或重新充电（爆炸和腐蚀的危险）。<br>请勿拆解或损坏电池。请勿将电池投入明火中。 |

# Table of contents


**1 About this documentation 27**
1.1 Editions of this documentation. . . . . 27
1.2 Overview of target groups and product phases. . . . . 27
1.3 Field of application. . . . . 27
1.4 Related documentations. . . . . 27
1.4.1 Drive systems, system components . . . . . 27
1.4.2 Firmware/Runtime . . . . . 27
1.4.3 Functional safety. . . . . 28
1.4.4 Motors . . . . . 29
1.4.5 Cables . . . . . 29
1.5 Customer feedback. . . . . 29
**2 Product identification and scope of supply 31**
2.1 Type plate . . . . . 31
2.2 Scope of supply. . . . . 31
**3 Safety instructions for electric drive and control systems 33**
3.1 Basic information. . . . . 33
3.1.1 Using and passing on the safety instructions. . . . . 33
3.1.2 Requirements for safe use. . . . . 33
3.1.3 Hazards due to incorrect use. . . . . 34
3.2 Instructions with regard to specific dangers. . . . . 34
3.2.1 Protection against contact with electrical parts and housings. . . . . 34
3.2.2 Protective extra-low voltage as protection against electric shock. . . . 36
3.2.3 Protection against dangerous movements. . . . . 36
3.2.4 Protection against electromagnetic and magnetic fields during operation and mounting. . . . . 37
3.2.5 Protection against contact with hot parts. . . . . 38
3.2.6 Protection during handling and mounting. . . . . 38
3.2.7 Battery safety. . . . . 38
3.2.8 Protection against pressurized systems. . . . . 39
3.2.9 Explanation of signal words and the safety alert symbol. . . . . 39
**4 Intended use 41**
**5 Spare parts, accessories and wear parts 43**
5.1 XAS2, shield connection . . . . . 43
5.1.1 Type code. . . . . 43
5.1.2 Shield connection. . . . . 44
XAS2-001-003-NN. . . . . 44
XAS2-002-003-NN. . . . . 45
XAS2-003-003-NN. . . . . 46
XAS2-004-001-NN. . . . . 47
XAS2-004-002-NN. . . . . 48
XAS2-005-003-NN. . . . . 49
XAS2-006-003-NN. . . . . 50
XAS2-007-001-NN. . . . . 51
XAS2-007-002-NN. . . . . 52
XAS2-008-001-NN. . . . . 53

XAS2-008-002-NN. . . . . 54
XAS2-009-003-NN. . . . . 55
5.1.3 Clamping plate (XAS2-xxx-001-NN). . . . . 56
Distance between cable and drive controller. . . . . 56
5.1.4 Clamping plate (XAS2-xxx-002-NN). . . . . 57
Distance between cable and drive controller. . . . . 57
5.1.5 Clamping plate (XAS2-xxx-003-NN). . . . . 58
Positions. . . . . 58
Distance between cable and drive controller. . . . . 59
5.2 XAS4, DC bus adapter. . . . . 60
5.2.1 Purpose. . . . . 60
5.3 ctrlX DRIVE panel. . . . . 61
5.3.1 XDP1 . . . . . 61
5.3.2 Overview. . . . . 62
5.3.3 Operation modes . . . . . 63
5.4 Wear parts. . . . . 63
**6 Ambient conditions 65**
6.1 Installation conditions . . . . . 65
6.1.1 Ambient and operating conditions . . . . . 65
6.1.2 Control cabinet design and cooling system . . . . . 67
6.1.3 Compatibility with foreign materials . . . . . 68
6.2 Transporting the components . . . . . 68
6.3 Storing the components . . . . . 69
**7 Technical data 71**
7.1 Drive controllers. . . . . 71
7.1.1 XCS. . . . . 71
7.1.2 XCD. . . . . 75
7.1.3 XMS. . . . . 77
XMS*-W.... . . . . 77
XMS*-C.... . . . . 81
7.1.4 XMD. . . . . 83
7.1.5 XMQ. . . . . 85
7.2 Supply units. . . . . 87
7.2.1 XVR. . . . . 87
7.2.2 XVE. . . . . 89
7.3 China RoHS 2. . . . . 90
**8 Standards 91**
8.1 CE label. . . . . 91
8.1.1 Overview. . . . . 91
8.1.2 Declaration of conformity (Machinery Directive). . . . . 92
8.2 UL/CSA certification . . . . . 98
8.3 EAC label. . . . . 99
8.4 UKCA marking. . . . . 100
8.4.1 Overview. . . . . 100
8.4.2 Declaration of conformity (Machinery Directive). . . . . 101

9 Interfaces 107
9.1 Connection points for power section/control section. . . . . 107
9.2 XCS, power section connection points . . . . . 108
9.2.1 XCS*-*0010/23. . . . . 108
9.2.2 XCS*-*0054/70/90. . . . . 109
9.2.3 XCS*-W0100/120. . . . . 110
9.2.4 XCS*-W0150/180. . . . . 111
9.2.5 XCS*-*02xx/*03xx. . . . . 112
9.3 XCD, power section connection points . . . . . 113
9.3.1 XCD*-W2323 . . . . . 113
9.4 XMS, power section connection points . . . . . 114
9.4.1 XMS*-W0006 ... 36. . . . . 114
9.4.2 XMS*-*0054 ... 90. . . . . 115
9.4.3 XMS*-W0100, -W0120. . . . . 116
9.4.4 XMS*-W0150, -W0180. . . . . 117
9.4.5 XMS*-*0210 ... 375. . . . . 118
9.5 XMD, power section connection points . . . . . 119
9.5.1 XMD*-W0606 ... W3636 . . . . . 119
9.5.2 XMD*-*5454/-*7070 . . . . . 120
9.6 XMQ*-WQ001, connection points . . . . . 121
9.7 XMQ*-WQ002, connection points . . . . . 122
9.8 XVR, power section connection points . . . . . 123
9.8.1 XVR*-W0019. . . . . 123
9.8.2 XVR*-W0048 ... W0100. . . . . 123
9.9 XVE, connection points . . . . . 124
9.9.1 XVE*-W0030. . . . . 124
9.9.2 XVE*-W0075. . . . . 124
9.9.3 XVE*-W0125. . . . . 125
9.10 Control section connection points . . . . . 126
9.10.1 Control section types. . . . . 126
Type code. . . . . 126
Single-axis (XMS, XCS). . . . . 127
Double-axis (XMD, XCD). . . . . 128
Supply unit (XVE, XVR). . . . . 129
9.10.2 ctrlX DRIVE single-axis . . . . . 130
9.10.3 ctrlX DRIVE double-axis . . . . . 131
9.10.4 ctrlX DRIVEplus single-axis . . . . . 132
9.10.5 ctrlX DRIVEplus + CORE single-axis . . . . . 133
9.10.6 ctrlX DRIVEplus double-axis . . . . . 134
9.10.7 ctrlX DRIVEplus + CORE double-axis . . . . . 135
9.10.8 ctrlX DRIVE supply unit . . . . . 136
9.10.9 ctrlX DRIVEplus + CORE supply unit . . . . . 136
10 Mounting, dismounting and electrical installation 137
10.1 Information on control cabinet mounting . . . . . 137
10.2 Required electric strength of the connected lines . . . . . 137
10.3 Mounting positions of components . . . . . 138

10.4 Coldplate. . . . . 139
10.5 Housing dimensions. . . . . 139
10.5.1 XCS. . . . . 139
10.5.2 XCD. . . . . 142
10.5.3 XMS. . . . . 143
10.5.4 XMD. . . . . 146
10.5.5 XMQ. . . . . 147
10.5.6 XVR. . . . . 148
10.5.7 XVE. . . . . 150
10.6 Dismounting. . . . . 152
10.6.1 Dismounting steps. . . . . 152
10.7 Electrical installation. . . . . 152
10.7.1 General information on how to install the drive controller . . . . . 152
10.7.2 EMC measures for design and installation . . . . . 153
Rules for design of installations with drive controllers in compliance with EMC. . . . . 153
Optimum EMC installation in facility and control cabinet. 155
Ground connections . . . . . 162
Installing signal lines and signal cables . . . . . 163
General interference suppression measures for relays, contactors, switches, chokes and inductive loads . . . . . 164
Information on interference suppression measures. . . . . 164
10.7.3 Overcurrent protection. . . . . 165
10.7.4 Overall connection diagrams. . . . . 166
Overall connection diagram XCS*-W0010/W0023. . . . . 166
Overall connection diagram XCS*-*0054/*0070. . . . . 167
Overall connection diagram XCS*-*0090. . . . . 168
Overall connection diagram XCS*-W01xx. . . . . 169
Overall connection diagram XCS*-*02xx/*03xx. . . . . 170
Overall connection diagram XCD . . . . . 171
Overall connection diagram XMS*-W0006...W0036. . . . . 172
Overall connection diagram XCS*-W0054/W0090. . . . . 173
Overall connection diagram XMS*-*0100...*0375 . . . . . 174
Overall connection diagram XMD*-W0606 ... W3636 . . . . 175
Overall connection diagram XMD*-*5454/-*7070 . . . . . 176
Overall connection diagram XMQ*-WQ001 . . . . . 177
Overall connection diagram XMQ*-WQ002 . . . . . 178
Overall connection diagram XVR . . . . . 179
Overall connection diagram XVE*-W0030. . . . . 181
Overall connection diagram XVE*-W0075/-W0125. . . . . 182
Symbols (connection diagram). . . . . 183
10.7.5 On-board connection points. . . . . 183
Equipment grounding conductor . . . . . 183
XD01, mains connection . . . . . 187
XD02, L+ L-, DC bus connection . . . . . 196
XD03, motor connection . . . . . 199
XD03, mains XLI-XVR (XVR*-W0019, XLI1-1R-W0019). . . . 207

XD03, mains XLI-XVR (XVR*-W0048, XLI1-1R-W0048). . . . 208
XD03, mains XLI-XVR (XVR*-W0072, XLI*-1R-W0072). . . . 209
XD03, mains XLI-XVR (XVR*-W0100, XLI*-1R-W0100). . . . 210
XD04, external braking resistor . . . . . 211
XD10, 24 V supply (control voltage) . . . . . 217
XE20, Y capacitor ground connection. . . . . 219
XF21 P1, XF22 P2, communication (M8) . . . . . 220
XF21 P1, XF22 P2, communication (RJ-45) . . . . . 221
XG02, Bb relay contact . . . . . 223
XG03, motor temperature monitoring and motor holding brake . . . . . 224
XG20, XLI bus . . . . . 229
XG20, digital motor encoder connection . . . . . 230
XG31, digital inputs, digital outputs, analog input . . . . . 232
XG41, safety technology Safe Torque Off . . . . . 233
XZ03, hybrid connection (motor, motor temperature monitoring and motor holding brake) . . . . . 235
10.7.6 Optional connection points. . . . . 238
XG21, XG22, multi-encoder . . . . . 238
SafeMotion M5. . . . . 240
XG37, digital inputs, digital outputs . . . . . 242
XG38, analog inputs, analog outputs . . . . . 243
ctrlX DRIVEplus with ctrlX CORE. . . . . 245
**11 Commissioning 249**
11.1 IT security . . . . . 249
11.2 Commissioning steps. . . . . 249
**12 Description of the devices 251**
12.1 Positions of the plates. . . . . 251
12.2 Type plate . . . . . 252
12.3 Additional plate. . . . . 252
12.4 Warning labels . . . . . 253
12.4.1 Warning labels at the device. . . . . 253
12.4.2 Foreign-language warning labels. . . . . 253
12.5 Warning labels (bilingual) . . . . . 254
12.6 Diagnostic display. . . . . 255
12.6.1 PF01 LED (Device State) . . . . . 255
12.6.2 Sercos/EtherCAT/PROFINET IO. . . . . 256
Display elements . . . . . 256
Port LED . . . . . 256
Diagnostic LED. . . . . 258
**13 Error causes and troubleshooting 261**
**14 Maintenance 263**
**15 Ordering information 265**
15.1 Type code (example XCS). . . . . 265
15.2 Accessories and spare parts. . . . . 266

**16 Environmental protection and disposal 267**
16.1 Environmental protection . . . . . 267
16.2 Disposal . . . . . 267
**17 Service and support 269**
**18 Index 271**

# 1 About this documentation

## 1.1 Editions of this documentation

Table 1: Editions of this documentation

| Edition | Release date | Comment |
|---|---|---|
| 01 | 2019-04 | First edition |
| 02 | 2022-02 | Revised edition |
| 03 | 2023-07 | Revised edition |

## 1.2 Overview of target groups and product phases

This documentation provides information on the mounting, installation and operation of the described products by persons trained and qualified to work with electrical installations.

## 1.3 Field of application

These Operating Instructions apply to all drive technology device types the type codes of which begin with:

X***-W****-

For the type code data please see the type plate of the device.

## 1.4 Related documentations

### 1.4.1 Drive systems, system components

Table 2: Documentations – drive systems, system components

| Title<br>ctrlX DRIVE | Type of documentation | Document type [1] | Material number |
|---|---|---|---|
| Drive Systems | Project Planning Manual | DOK-XDRV**-X**********-PRxx-EN-P | ➦R911386579 |

1) In the document type codes, "xx" is a placeholder for the current edition of the documentation (e.g.: PR01 is the first edition of a Project Planning Manual)

### 1.4.2 Firmware/Runtime

Table 3: Documentations – firmware

| Title<br>ctrlX DRIVE | Type of documentation | Document type [1] | Material number |
|---|---|---|---|
| AXS-V-04<br>Functions | Application Manual | DOK-XDRV**-AXS-04VRS**-APxx-EN-P | ➦R911421281 |
| AXS-V-04 (CoE)<br>Functions | Application Manual | DOK-XDRV**-AXS-04VRS*C-APxx-EN-P | ➦R911421283 |
| Diagnostic Messages of Runtime AXS-V-04RS | Reference Book | DOK-XDRV**-GEN4-DIAG**-RExx-EN-P | ➦R911421277 |
| Parameters/Objects of Runtime AXS-V-04RS | Reference Book | DOK-XDRV**-GEN4-PARA*C-RExx-EN-P | ➦R911421279 |
| AXS-V-03<br>Functions | Application Manual | DOK-XDRV**-AXS-03VRS**-APxx-EN-P | ➦R911410073 |
| AXS-V-03 (CoE)<br>Functions | Application Manual | DOK-XDRV**-AXS-03VRS*C-APxx-EN-P | ➦R911398021 |

| Title<br>ctrlX DRIVE | Type of documentation | Document type [1)] | Material number |
|---|---|---|---|
| Diagnostic Messages of Runtime AXS-V-03RS | Reference Book | DOK-XDRV**-GEN3-DIAG**-RExx-EN-P | ➦R911409763 |
| Parameters of Runtime AXS-V-03RS | Reference Book | DOK-XDRV**-GEN3-PARA**-RExx-EN-P | ➦R911409808 |
| Parameters/Objects of Runtime AXS-V-03RS | Reference Book | DOK-XDRV**-GEN3-PARA*C-RExx-EN-P | ➦R911419643 |
| AXS-V-02<br>Functions | Application Manual | DOK-XDRV**-AXS-02VRS**-APxx-EN-P | ➦R911398021 |
| Diagnostic Messages of Runtime AXS-V-02RS | Reference Book | DOK-XDRV**-GEN2-DIAG**-RExx-EN-P | ➦R911383776 |
| Parameters of Runtime AXS-V-02RS | Reference Book | DOK-XDRV**-GEN2-PARA**-RExx-EN-P | ➦R911383778 |

1) In the document typecodes, xx is a placeholder for the current edition of the documentation (e.g.: RE02 is the second edition of a Reference Book)

### 1.4.3 Functional safety

Table 4: Documentations – functional safety

| Title<br>ctrlX DRIVE | Type of documentation | Document typecode[1)] | Material number |
|---|---|---|---|
| Integrated Safety Technology<br>Safe Torque Off | Application Manual | DOK-XDRV**-SI-TX******-APxx-EN-P | ➦R911383774 |
| Integrated Safety Technology<br>SafeMotion | Application Manual | DOK-XDRV**-SI-MX******-APxx-EN-P | ➦R911404905 |

1) In the document typecodes, xx is a placeholder for the current edition of the documentation (e.g.: AP02 is the second edition of an Application Manual)

### 1.4.4 Motors

Table 5: Documentations – motors

| Title | Type of documentation | Document typecode[1)] | Material number |
|---|---|---|---|
| MS2N<br>Synchronous Servomotors | Project Planning Manual | DOK-MOTOR*-MS2N*******-PRxx-EN-P | ➦R911347583 |
| MS2S<br>Synchronous Servomotors | Project Planning Manual | DOK-MOTOR*-MS2S*******-PRxx-EN-P | ➦R911410075 |
| MS2E<br>Synchronous Servomotors<br>acc. to ATEX Directive 2014/34/EU | Project Planning Manual | DOK-MOTOR*-MS2E*******-PRxx-EN-P | ➦R911394140 |
| MSK<br>Synchronous Servomotors | Project Planning Manual | DOK-MOTOR*-MSK********-PRxx-EN-P | ➦R911296289 |
| MSK<br>Synchronous Servomotors<br>for Potentially Explosive Areas | Project Planning Manual | DOK-MOTOR*-MSK*EXGIIK3-PRxx-EN-P | ➦R911312709 |
| MKE Synchronous Motors<br>Synchronous Servomotors<br>acc. to ATEX Directive 2014/34/EU | Project Planning Manual | DOK-MOTOR*-MKE*GEN3***-PRxx-EN-P | ➦R911411017 |
| MAD / MAF<br>Asynchronous Motors MAD / MAF | Project Planning Manual | DOK-MOTOR*-MAD/MAF****-PRxx-EN-P | ➦R911295781 |
| MLF<br>Synchronous Linear Motors | Project Planning Manual | DOK-MOTOR*-MLF********-PRxx-EN-P | ➦R911293635 |
| ML3<br>Self-Cooled Linear Motors | Project Planning Manual | DOK-MOTOR*-ML3********-PRxx-EN-P | ➦R911389760 |
| MCL<br>Ironless Linear Motors MCL | Project Planning Manual | DOK-MOTOR*-MCL********-PRxx-EN-P | ➦R911330592 |

1) In the document type codes, "xx" is a placeholder for the current edition of the documentation (e.g.: PR01 is the first edition of a Project Planning Manual)

### 1.4.5 Cables

Table 6: Documentations – Cables

| Title | Type of documentation | Document type [1)] | Material number |
|---|---|---|---|
| ctrlX Motor Cables and Connectors | Reference Book | DOK-CONNEC-XDRV*******-RExx-EN-P | ➦R911420100 |
| Motor Cables and Connections with IndraDrive | Product information | DOK-CONNEC-MS2N*INDRV*-CAxx-EN-P | ➦R911401938 |
| Rexroth Connection Cables IndraDrive and IndraDyn | Selection Data | DOK-CONNEC-CABLE*INDRV-CAxx-EN-P | ➦R911322949 |

1) In the document type codes, xx is a placeholder for the current edition of the documentation (e.g.: CA03 is the third edition of the Catalog documentation)

## 1.5 Customer feedback

Our customers' suggestions, requests and ideas for improvement are extremely valuable to us.

Please send your comments on the documentations via e-mail to ➦ dokusupport@boschrexroth.de.

Please add your comments to the electronic PDF document and send us the PDF file.

# 2 Product identification and scope of supply

## 2.1 Type plate

Table 7: Type plate

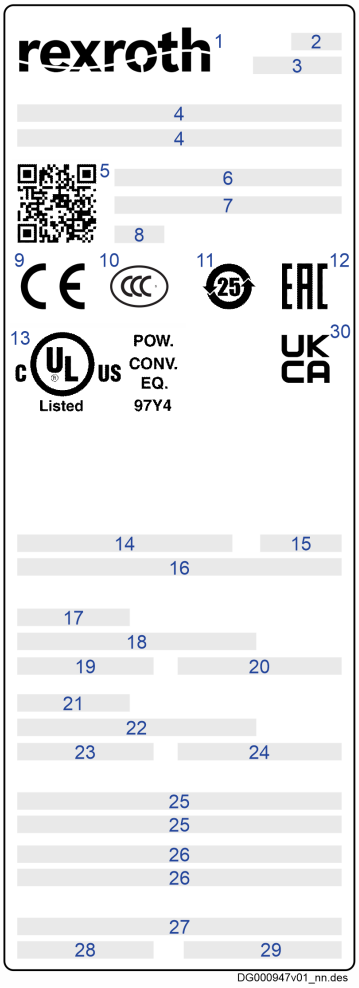


| | | | | |
|---|---|---|---|---|
| 1 | Word mark/logo | | 20 | Rated frequency<br>Input frequency |
| 2 | Factory | | 21 | Output data of power supply |
| 3 | Production week; 18W23, for example, refers to year 2018, week 23 | | 22 | Output voltage |
| 4 | Type designation | | 23 | Output current |
| 5 | QR code | | 24 | Output frequency |
| 6 | Material number | | 25 | UL text |
| 7 | Serial number | | 26 | UL text |
| 8 | Hardware index | | 27 | Company address |
| 9 | CE conformity mark | | 28 | Country of manufacture |
| 10 | CCC label | | 29 | Service hotline |
| 11 | China RoHS 2 | | 30 | UKCA marking |
| 12 | EAC conformity mark | | | |
| 13 | UL label | | | |
| 14 | Ambient temperature during operation | | | |
| 15 | Degree of protection provided by enclosure | | | |
| 16 | SCCR | | | |
| 17 | Supply input data | | | |
| 18 | Rated voltage<br>Input voltage | | | |
| 19 | Rated current<br>Input current | | | |

## 2.2 Scope of supply

Table 8: Scope of supply

| Standard | To be ordered separately |
|---|---|
| Device (e.g., drive controller) | Shield connection (XAS2) |
| Connector X... | |
| Documentation | |

# 3 Safety instructions for electric drive and control systems

## 3.1 Basic information

### 3.1.1 Using and passing on the safety instructions

Do not install and operate any components of the electric drive and control system before carefully reading all provided documents. These safety instructions and all other user instructions have to be read prior to working with these components. If you do not have the user documentation for the components, contact our Rexroth sales representative. Request the immediate delivery of these documents to the person or persons in charge of the safe operation of the components.

In the case of vending, rental and/or distribution of the components in any other form, include these safety instructions in the national language of the user.

**Improper use of these components, failure to follow the safety instructions in this document or tampering with the product, including disabling of safety devices, could result in property damage, personal injury, electric shock or even death.**

### 3.1.2 Requirements for safe use

Prior to initial commissioning of the components of the electric drive and control system, read the following instructions to avoid personal injury and/or property damage. You must comply with these safety instructions.

- In the case of damage due to non-compliance with the safety instructions, Rexroth shall not assume any liability.
- Prior to commissioning, read the operating, maintenance and safety instructions. If you are not able to sufficiently understand the language used in the application documentation, please contact and inform your vendor.
- Appropriate and professional transport, storage, assembly and installation, as well as thorough operation and maintenance, are the basis of correct and safe operation of the component.
- Only qualified personnel may use components of the electric drive and control system or work in its close proximity.
- Only use accessories and spare parts approved by Rexroth.
- Comply with the safety instructions and regulations of the country in which the components of the electric drive and control system are operated.
- Only use components of the electric drive and control system as intended. Please refer to chapter **Intended use**.
- The ambient and operating conditions specified in this application documentation have to be complied with.
- Applications for functional safety are only allowed if they are explicitly and unambiguously specified in the application documentation "Integrated Safety Technology". If this is not the case, these applications are excluded. Functional safety includes parts of the overall safety in which measures of risk reduction for personal safety depend on electric, electronic or programmable controls.
- The specifications contained in the application documentation regarding the use of the provided components are only application examples and recommendations.

- For their individual application, the machine manufacturer and the system installer have to
  - verify the applicability of the provided components and the specifications made for their use in this application documentation,
  - synchronize the applicability with the safety regulations and standards applicable for their application and to execute the required measures, modifications and additions.
- Commissioning of the provided components is prohibited until is has been established that the machine or the system in which the components are installed corresponds to the country-specific provisions, safety regulations and standards of the application.
- Operation is only allowed when complying with the national EMC regulations for the relevant application.
- For information about EMC-compliant installation, refer to the section on EMC in the relevant application documentation.
- The system or machine manufacturer is responsible for compliance with the limit values specified in the national regulations.
- The technical data, connection and installation conditions of the components are contained in the relevant application documentations and must be complied with.
- Country-specific laws and regulations must be observed.

### 3.1.3 Hazards due to incorrect use

- High electrical voltage and high operating current! Danger to life or serious personal injury due to electric shock!
- High electrical voltage due to incorrect connection! Danger to life or personal injury due to electric shock!
- Dangerous movements! Danger to life, serious personal injury or property damage due to unintended motor movements!
- Health hazard for persons with heart pacemakers, metal implants and hearing aids in proximity to electric drive systems!
- Risk of burns by hot housing surfaces!
- Risk of injury by improper handling! Personal injury by crushing, shearing, cutting, hitting!
- Risk of injury by improper handling of batteries!
- Risk of injury by improper handling of pressurized lines!

## 3.2 Instructions with regard to specific dangers

### 3.2.1 Protection against contact with electrical parts and housings

This section concerns components of the electric drive and control system with voltages of **more than 50 volts**.

Contact with parts conducting voltages above 50 volts can cause personal danger and electric shock. When operating components of the electric drive and control system, it is unavoidable that some parts of these components conduct dangerous voltage.

High electrical voltage! Danger to life, risk of injury by electric shock or serious personal injury!

- Only qualified persons are allowed to operate, maintain and/or repair the components of the electric drive and control system.
- Follow the general installation and safety regulations when working on power installations.

- Before switching on, the equipment grounding conductor must have been permanently connected to all electrical components in accordance with the connection diagram.
- Even for short measurements or tests, operation is only allowed with the equipment grounding conductor permanently connected to the specified points of the components.
- Before accessing electrical parts with voltage potentials higher than 50 V, disconnect electrical components from the mains or from the voltge source. Protect the electrical component against restart.
- Observe the following aspects in the case of electrical components:
  Prior to touching an electrical component, always wait for **30 minutes** after switching off power in order for live capacitors to discharge. Before beginning to work, measure the electrical voltage of live parts to make sure that the equipment is safe to touch.
- Install the provided covers and safety devices for protection against contact prior to switch-on.
- Do not touch any electrical connection points of the components while power is turned on.
- Do not connect or disconnect live parts.
- Under certain conditions, electric drive systems can be operated at mains protected by residual-current-operated circuit-breakers sensitive to universal current (RCDs/RCMs).
- Secure built-in devices from penetrating foreign objects and water, as well as from direct contact, by providing an external housing, for example a control cabinet.

High housing voltage and high leakage current! Danger to life, risk of injury by electric shock!

- Prior to switching on and commissioning, ground or connect the electric drive and control system components to the equipment grounding conductor at the grounding points.
- Connect the equipment grounding conductor of the electric drive and control system components permanently to the main power supply at all times. The leakage current is greater than 3.5 mA.
- Establish an equipment grounding connection with a minimum cross section according to the table below. With an outer conductor cross section smaller than 10 mm2 (8 AWG), the alternative connection of two equipment grounding conductors is allowed, each having the same cross section as the outer conductors.

Table 9: Minimum cross section of equipment grounding connection

| Cross section of outer conductor | Minimum cross section of equipment grounding conductor<br>Leakage current ≥ 3.5 mA | |
|---|---|---|
| | 1 equipment grounding conductor | 2 equipment grounding conductors |
| 1.5 mm2 (AWG 16) | 10 mm2 (AWG 8) | 2 × 1.5 mm2 (AWG 16) |
| 2.5 mm2 (AWG 14) | | 2 × 2.5 mm2 (AWG 14) |
| 4 mm2 (AWG 12) | | 2 × 4 mm2 (AWG 12) |
| 6 mm2 (AWG 10) | | 2 × 6 mm2 (AWG 10) |
| 10 mm2 (AWG 8) | | - |
| 16 mm2 (AWG 6) | 16 mm2 (AWG 6) | - |
| 25 mm2 (AWG 4) | | - |
| 35 mm2 (AWG 2) | | - |
| 50 mm2 (AWG 1/0) | 25 mm2 (AWG 4) | - |

| Cross section of outer conductor | Minimum cross section of equipment grounding conductor Leakage current ≥ 3.5 mA | |
|---|---|---|
| | 1 equipment grounding conductor | 2 equipment grounding conductors |
| 70 mm2 (AWG 2/0) | 35 mm2 (AWG 2) | - |

### 3.2.2 Protective extra-low voltage as protection against electric shock

Protective extra-low voltage is used to connect devices with basic insulation at extra-low voltage circuits.

At components of an electric drive and control system provided by Rexroth, all connections and terminals with voltages up to 50 volts are PELV (**Protective Extra-Low Voltage**) systems. It is allowed to connect devices equipped with basic insulation, such as programming devices, PCs, notebooks, display units, to these connections.

**Danger to life, risk of injury by electric shock! High electrical voltage by incorrect connection!**If extra-low voltage circuits of devices containing voltages and circuits of more than 50 volts (e.g., the mains connection) are connected to Rexroth products, the connected extra-low voltage circuits must comply with the requirements for PELV (**Protective Extra-Low Voltage**).

### 3.2.3 Protection against dangerous movements

Dangerous movements can be caused by incorrect control of connected motors. In the following, the different reasons are listed:

- Improper or wrong wiring or cable connection
- Operating errors
- Incorrect parameter input prior to commissioning
- Malfunction of sensors and encoders
- Defective components
- Errors in the software or firmware

These errors can occur immediately after switch-on or after an undefined time of operation.

As far as possible, the monitoring functions in the components of the electric drive and control system rule out malfunction in the connected drives. Regarding personal safety, in particular the danger of personal injury and/or property damage, this alone cannot be relied upon to ensure complete safety. Until the implemented monitoring functions are active, it must be assumed in any case that faulty drive movements will occur. The faulty movements depend on the type of control and the operating state.

Dangerous movements! Danger to life, risk of injury, serious injury or property damage!

Prepare a **risk assessment** for the system or machine, with their specific conditions, in which the components of the electric drive and control system are installed.

As specified in the risk assessment, the user has to provide monitoring functions and higher-level measures in the system for personal safety. The safety regulations applicable to the system or machine have to be included. Unintended machine movements or other malfunctions are possible if safety devices are disabled, bypassed or not activated.

To avoid accidents, personal injury and/or property damage:

- Keep free and clear of the machine's range of motion and moving machine parts. Prevent personnel from accidentally entering the machine's range of motion by using, for example:
  - Safety fences
  - Safety guards
  - Protective covering
  - Light barriers
- Make sure the safety fences and protective coverings are strong enough to resist maximum possible kinetic energy.
- Mount emergency stop switches in the immediate reach of the operator. Before commissioning, verify that the emergency stop equipment works. Do not operate the machine if the emergency stop switch is not working.
- Prevent unintended start-up. Isolate the drive power connection by means of OFF switches/OFF buttons or use a safe starting lockout.
- Make sure that the drives are brought to safe standstill before accessing or entering the danger zone.
- Additionally secure vertical axes against falling or dropping after switching off the motor power by, for example,
  - mechanically securing the vertical axis,
  - adding an external braking/arrester/clamping mechanism or
  - ensuring sufficient counterweight for the axis.
- The standard equipment **motor holding brake** or an external holding brake controlled by the drive controller is **not sufficient to guarantee personal safety**!
- De-energize the components of the electric drive and control system using the master switch, and make sure they cannot be switched back on in the case of:
  - Maintenance and repairs
  - Cleaning work
  - Long service interruptions
- Avoid operating high-frequency, remote control and radio equipment in close proximity to components of the electric drive and control system and their supply leads. If the use of these devices cannot be avoided, check the machine or installation, at initial commissioning of the electric drive and control system, for possible malfunctions when operating such high-frequency, remote control and radio equipment in its possible positions of normal use. It might possibly be necessary to perform a special electromagnetic compatibility (EMC) test.

### 3.2.4 Protection against electromagnetic and magnetic fields during operation and mounting

**Electromagnetic and magnetic fields!**

Health hazard for persons with active implantable medical devices (AIMD) such as pacemakers or passive metallic implants.

- Hazards for the above-mentioned groups of persons by electromagnetic and magnetic fields in the immediate vicinity of drive controllers and the associated current-carrying conductors.
- Access to these areas can pose an increased risk to the above-mentioned groups of persons. They should seek advice from their attending doctor.
- If overcome by possible effects on above-mentioned persons during operation of drive controllers and accessories, remove the exposed persons from the vicinity of conductors and devices.

### 3.2.5 Protection against contact with hot parts

- Do not touch hot surfaces of, for example, braking resistors, heat sinks, supply units and drive controllers, motors, windings and laminated cores!
- According to the operating conditions, temperatures of the surfaces can be **higher than 60 °C** (140 °F) during or after operation.
- After having switched them off, allow the motors to cool down long enough before touching them. Cooling down may require **up to 140 minutes**. The time required for cooling down is approximately five times the thermal time constant specified in the technical data.
- After switching off chokes, supply units and drive controllers, wait **15 minutes** to allow them to cool down before touching them.
- Wear safety gloves or do not work at hot surfaces.
- For certain applications, and in accordance with the respective safety regulations, the manufacturer of the machine or system must take measures to avoid injuries caused by burns in the final application. Possible measures: warnings at the machine or system, guards (shieldings or barriers) or safety instructions in the application documentation.

### 3.2.6 Protection during handling and mounting

Risk of injury by improper handling! Personal injury by crushing, shearing, cutting, hitting!

- Comply with the relevant statutory regulations of accident prevention.
- Use suitable mounting and transport equipment.
- Avoid jamming and crushing by appropriate measures.
- Always use suitable tools. Use special tools if specified.
- Use lifting equipment and tools in the correct manner.
- Use suitable protective equipment (hard hat, safety goggles, safety shoes, safety gloves, for example).
- Do not stand under hanging loads.
- Immediately clean up any spilled liquids from the floor due to the risk of falling!

### 3.2.7 Battery safety

Batteries consist of active chemicals in a solid housing. Therefore, improper handling can cause injury or property damage. Risk of injury by improper handling!

- Do not attempt to reactivate low batteries by heating or other methods (risk of explosion and cauterization).
- Do not attempt to recharge the batteries since this may cause leakage or explosion.
- Do not throw batteries into open flames.
- Do not disassemble any batteries.
- When replacing the battery/batteries, do not damage the electrical parts installed in the devices.
- Only use the battery types specified for the product.

Environmental protection and disposal! The batteries contained in the product are considered dangerous goods during land, air, and sea transport (risk of explosion) in the sense of the legal regulations. Dispose of used batteries separately from other waste. Comply with the national regulations of your country.

### 3.2.8 Protection against pressurized systems

According to the information given in the Project Planning Manuals, motors and components cooled with liquids and compressed air can be partially supplied with externally fed, pressurized media, such as compressed air, hydraulics oil, cooling liquids and cooling lubricants. Improper handling of the connected supply systems, supply lines or connections can cause injuries or property damage.

Risk of injury by improper handling of pressurized lines!

- Do not attempt to disconnect, open or cut pressurized lines (risk of explosion).
- Comply with the respective manufacturer's operating instructions.
- Before dismounting lines, relieve pressure and empty medium.
- Use suitable protective equipment (safety goggles, safety shoes, safety gloves, for example).
- Immediately clean up any spilled liquids from the floor due to the risk of falling!

Environmental protection and disposal! The agents (e.g., fluids) used to operate the product might not be environmentally friendly. Dispose of agents harmful to the environment separately from other waste. Comply with the national regulations of your country.

### 3.2.9 Explanation of signal words and the safety alert symbol

The safety instructions in the available application documentation contain specific signal words (DANGER, WARNING, CAUTION, NOTICE) and, where required, a safety alert symbol (in accordance with ANSI Z535.6-2011).

The signal word is intended to draw the reader's attention to the safety instruction and describes the hazard severity.

The safety alert symbol (a triangle with an exclamation point), which precedes the signal words DANGER, WARNING and CAUTION, is used to alert the reader to personal injury hazards.

| | |
|---|---|
| ⚠ DANGER | Non-compliance with this safety instruction **will** result in death or serious personal injury. |
| ⚠ WARNING | Non-compliance with this safety instruction **can** result in death or serious personal injury. |
| ⚠ CAUTION | Non-compliance with this safety instruction can result in moderate or minor personal injury. |
| *NOTICE* | Non-compliance with this safety instruction can result in property damage. |

# 4 Intended use

This product may only be used for the mentioned applications under the specified application, ambient and operating conditions.

This product is exclusively intended for use in machines and systems in an industrial environment. This is to be understood as applications according to IEC 60204-1 "Safety of machinery - Electrical equipment of machines" and NFPA 79 "Electrical Standard for Industrial Machinery".

Components of the ctrlX DRIVE drive system are **products of category 3** (with limited availability) according to IEC 61800-3. This category comprises EMC limit values for conducted and radiated emission. To comply with this category (limit values), use appropriate measures to suppress inteferences in the drive system (e.g., mains filters, shielding measures).

These components are not intended for use in a public low voltage system for residential areas. If these components are operating in such a network, high frequency interferences are to be expected. Additional measures for interference suppression can be required.

# 5 Spare parts, accessories and wear parts

## 5.1 XAS2, shield connection

### 5.1.1 Type code

Table 10: XAS2, type code

| | | | | | | | | | | | | | | | | | | | | | | | | | | | | | | | | | | | | | | | | | | |
|---|---|---|---|---|---|---|---|---|---|---|---|---|---|---|---|---|---|---|---|---|---|---|---|---|---|---|---|---|---|---|---|---|---|---|---|---|---|---|---|---|---|---|
| | | | | | | | | | | 1 | | | | | | | | | 2 | | | | | | | | | 3 | | | | | | | | | 4 | |
| **Short type designation** | 1 | 2 | 3 | 4 | 5 | 6 | 7 | 8 | 9 | 0 | 1 | 2 | 3 | 4 | 5 | 6 | 7 | 8 | 9 | 0 | 1 | 2 | 3 | 4 | 5 | 6 | 7 | 8 | 9 | 0 | 1 | 2 | 3 | 4 | 5 | 6 | 7 | 8 | 9 | 0 |
| **Example:** | X | A | S | 2 | - | 0 | 0 | 1 | - | 0 | 0 | 1 | - | N | N | | | | | | | | | | | | | | | | | | | | | | | | | |
| | ① | | | | | ② | | | | ③ | | | | ④ | | | | | | | | | | | | | | | | | | | | | | | | | | |

| | |
|---|---|
| ① | **Product:**<br>XAS2 = ctrlX DRIVE accessories, shield connection |
| ② | **Device assignment:**<br>001 = XMD*-W5454, 7070<br>XMD*-C5454, 7070<br>002 = XCS*-W0100, 120<br>003 = XMS*-W0100, 120<br>004 = XCS*-W0210, 250, 280, 330, 375<br>XMS*-W0210, 250, 280, 330, 375<br>005 = XMS*-W0054, 70, 90<br>XMS*-C0054, 70, 90<br>006 = XCS*-W0054, 70<br>XCS*-C0054, 70<br>007 = XMS*-W0150, 180<br>008 = XCS*-W0150, 180<br>009 = XCS*-W0090 |
| ③ | **Cable outlet:**<br>001 = Downwards (only with device assignment = 004, 007, 008)<br>002 = Backwards (only with device assignment = 004, 007, 008)<br>003 = Downwards, backwards (only with device assignment = 001, 002, 003, 005, 006, 009)<br>With **Coldplate devices** and with 003, only the cable outlet facing **downwards** is possible. |
| ④ | **Other design:**<br>NN = None |

## 5.1.2 Shield connection

### XAS2-001-003-NN

rexroth
A Bosch Company

XAS2-001-003-NN

Beipackzettel

**R911401714**
**AA 2020-01**

R911401709

| Position | Mat.-Nr. | Benennung | Menge | Einheit |
|---|---|---|---|---|
| 0500 | R911330693 | BLECH HCS01.1 SCHIRM KLEMM& | 2 | ST |
| 0510 | R911401707 | ANSCHLUSS SCHIRM IDX B150-V3 | 1 | ST |
| 0520 | R911401701 | KLEMMBLECH 2X9-28MM IDX V2 | 1 | ST |
| 3000 | R913066624 | KOMBI-SCHRAUBE M6X14-8.8-H1-T30-V2-ST+EP | 2 | ST |
| 3010 | R911334423 | KOMBI-SCHRAUBE M5X30-8.8-Z4-CM-FE-Z | 2 | ST |

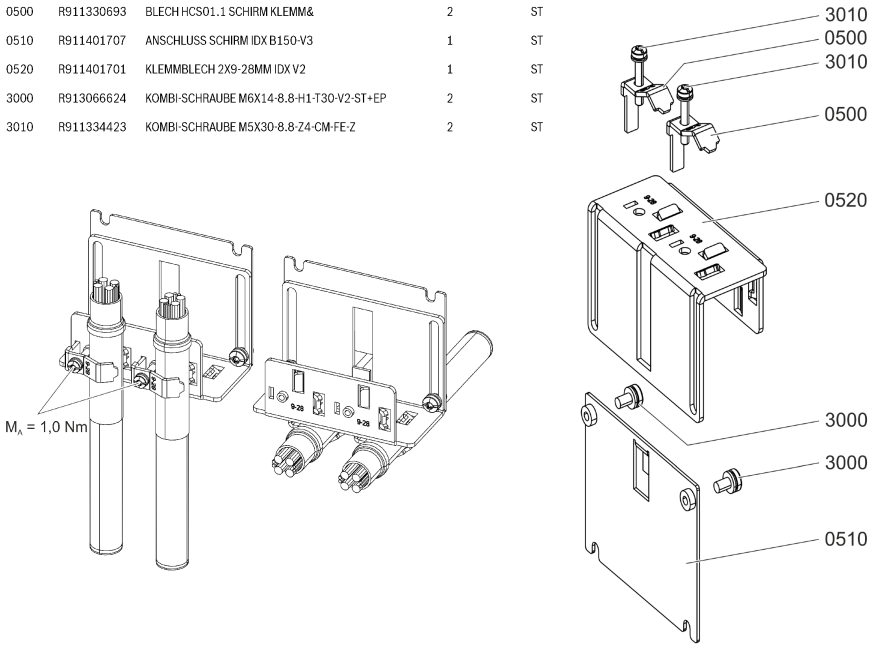


BEIPACKZETTEL XAS2-001-003-NN, R911401714, AA 2020-01, Bosch Rexroth AG

Fig. 1: Product insert XAS2-001-003-NN

## XAS2-002-003-NN

rexroth
A Bosch Company

XAS2-002-003-NN

Beipackzettel

**R911401749**
**AA 2020-01**

R911401751

| Position | Mat.-Nr. | Benennung | Menge | Einheit |
|---|---|---|---|---|
| 0500 | R911330693 | BLECH HCS01.1 SCHIRM KLEMM& | 1 | ST |
| 0510 | R911373746 | ABSCHIRMBLECH KLEMMBUEGEL 16-40 | 1 | ST |
| 0520 | R911401731 | ANSCHLUSS SCHIRM IDX B225-V3 | 1 | ST |
| 0530 | R911401730 | KLEMMBLECH 9-28MM&16-40MM IDX V2 | 1 | ST |
| 3000 | R913066624 | KOMBI-SCHRAUBE M6X14-8.8-H1-T30-V2- | 2 | ST |
| 3010 | R911342607 | KOMBI-SCHRAUBE M8X40-8.8-T40-CM-FE- | 1 | ST |
| 3020 | R911334423 | KOMBI-SCHRAUBE M5X30-8.8-Z4-CM-FE-Z | 1 | ST |

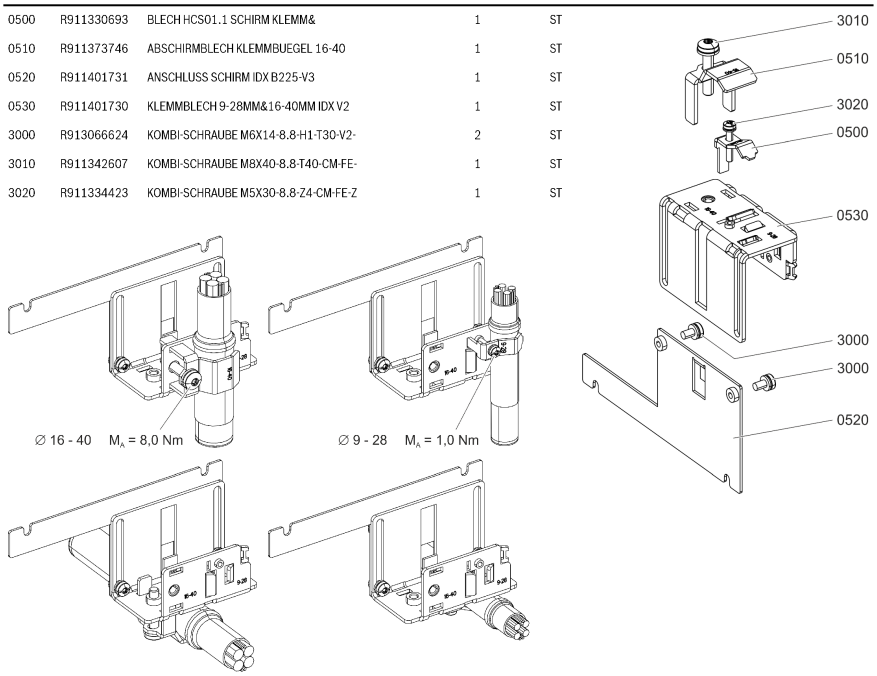


BEIPACKZETTEL XAS2-002-003-NN, R911401749, AA 2020-01, Bosch Rexroth AG

Fig. 2: Product insert XAS2-002-003-NN

## XAS2-003-003-NN

rexroth
A Bosch Company

XAS2-003-003-NN

Beipackzettel

**R911401750**
**AA 2020-01**

R911401752

| Position | Mat.-Nr. | Benennung | Menge | Einheit |
|---|---|---|---|---|
| 0500 | R911330693 | BLECH HCS01.1 SCHIRM KLEMM& | 1 | ST |
| 0510 | R911373746 | ABSCHIRMBLECH KLEMMBUEGEL 16-40 | 1 | ST |
| 0520 | R911401732 | ANSCHLUSS SCHIRM IDX B125-V3 | 1 | ST |
| 0530 | R911401730 | KLEMMBLECH 9-28MM&16-40MM IDX V2 | 1 | ST |
| 3000 | R913066624 | KOMBI-SCHRAUBE M6X14-8.8-H1-T30-V2- | 2 | ST |
| 3010 | R911342607 | KOMBI-SCHRAUBE M8X40-8.8-T40-CM-FE- | 1 | ST |
| 3020 | R911334423 | KOMBI-SCHRAUBE M5X30-8.8-Z4-CM-FE-Z | 1 | ST |

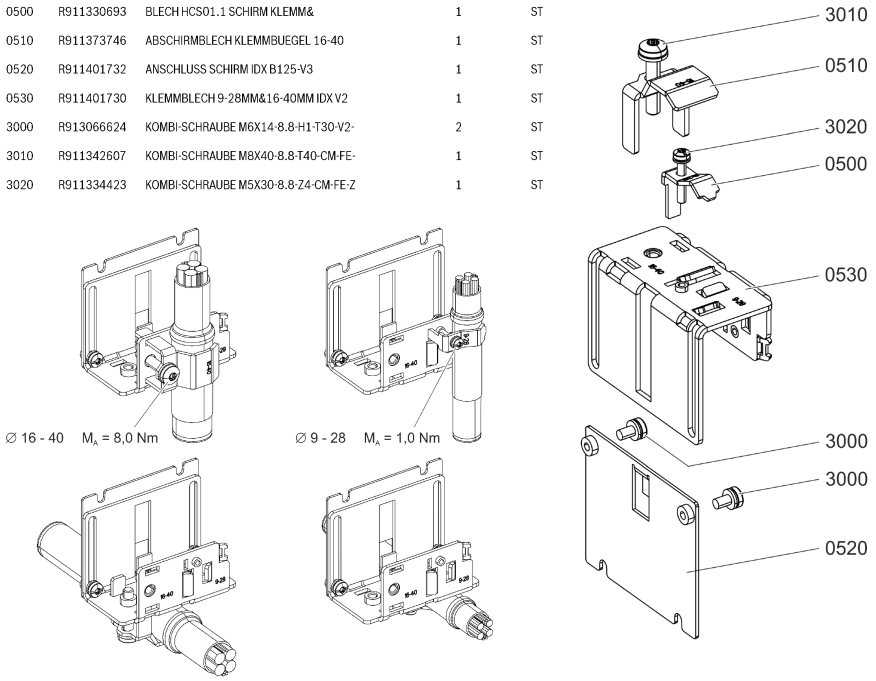


BEIPACKZETTEL XAS2-003-003-NN, R911401750, AA 2020-01, Bosch Rexroth AG

Fig. 3: Product insert XAS2-003-003-NN

## XAS2-004-001-NN

rexroth
A Bosch Company

XAS2-004-001-NN

Beipackzettel

**R911397983**
**AA 2019-05**

R911397836

| Position | Mat.-Nr. | Benennung | Menge | Einheit |
|---|---|---|---|---|
| 0500 | R911397429 | ANSCHLUSS SCHIRM IDX B350 180G | 1 | ST |
| 0520 | R911397430 | KLEMME IDX B350 180G | 1 | ST |
| 3000 | R911342607 | KOMBI-SCHRAUBE M8X40-8.8-H1-T30-V1-& | 2 | ST |
| 3010 | R911223313 | MUTTER KOM-M 8,0-D18-H09,50 | 2 | ST |

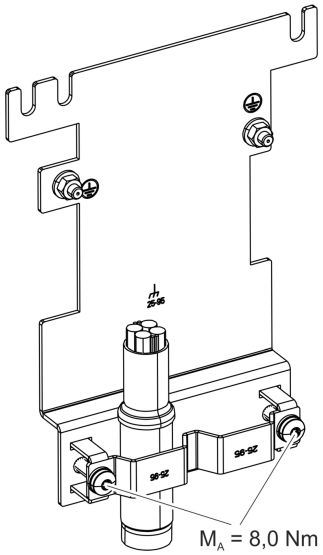


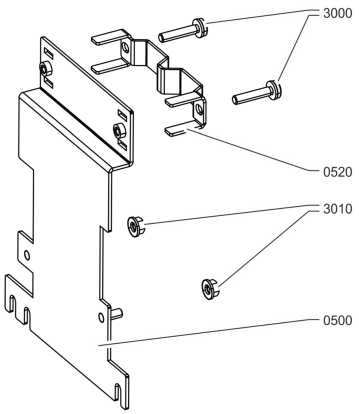


BEIPACKZETTEL XAS2-004-001-NN, R911397983, AA 2019-05, Bosch Rexroth AG

Fig. 4: Product insert XAS2-004-001-NN

## XAS2-004-002-NN

rexroth
A Bosch Company

XAS2-004-002-NN

Beipackzettel

**R911393961**
**AB 2019-04**

R911393948

| Position | Mat.-Nr. | Benennung | Menge | Einheit |
|---|---|---|---|---|
| 0500 | R911392928 | ANSCHLUSS SCHIRM IDX B350 90G | 1 | ST |
| 0510 | R911392930 | BEFESTIGUNGSARM SCHIRM IDX B350 90G | 1 | ST |
| 0515 | R911397084 | BEFESTIGUNGSARM SCHIRM IDX B350 90 V1 | 1 | ST |
| 0520 | R911392929 | KLEMME IDX B350 90G | 2 | ST |
| 3000 | R911342607 | M8X40-8.8-H1-T30-V1-& | 2 | ST |
| 3010 | R911223313 | MUTTER KOM-M 8,0-D18-H09,50 | 2 | ST |

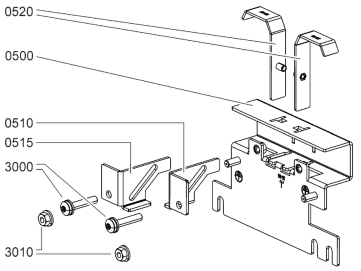


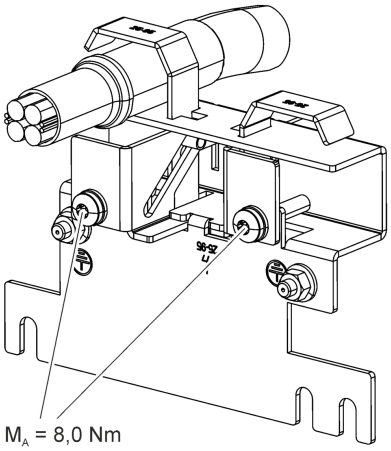


BEIPACKZETTEL XAS2-004-002-NN, R911393961, AB 2019-04, Bosch Rexroth AG

Fig. 5: Product insert XAS2-004-002-NN

## XAS2-005-003-NN

rexroth
A Bosch Company

XAS2-005-003-NN

Beipackzettel

**R911399902**
**AB 2020-05**

R911399912

| Position | Mat.-Nr. | Benennung | Menge | Einheit |
|---|---|---|---|---|
| 0500 | R911330693 | BLECH HCS01.1 SCHIRM KLEMM& | 1 | ST |
| 0510 | R911399910 | ANSCHLUSS SCHIRM IDX B075-V1 | 1 | ST |
| 0520 | R911399911 | KLEMMBLECH 1X9-28MM IDX V1 | 1 | ST |
| 3000 | R913066624 | KOMBI-SCHRAUBE M6X14-8.8-H1-T30-V2 | 2 | ST |
| 3010 | R911334423 | KOMBI-SCHRAUBE M5X30-8.8-Z4-CM-FE-Z | 1 | ST |

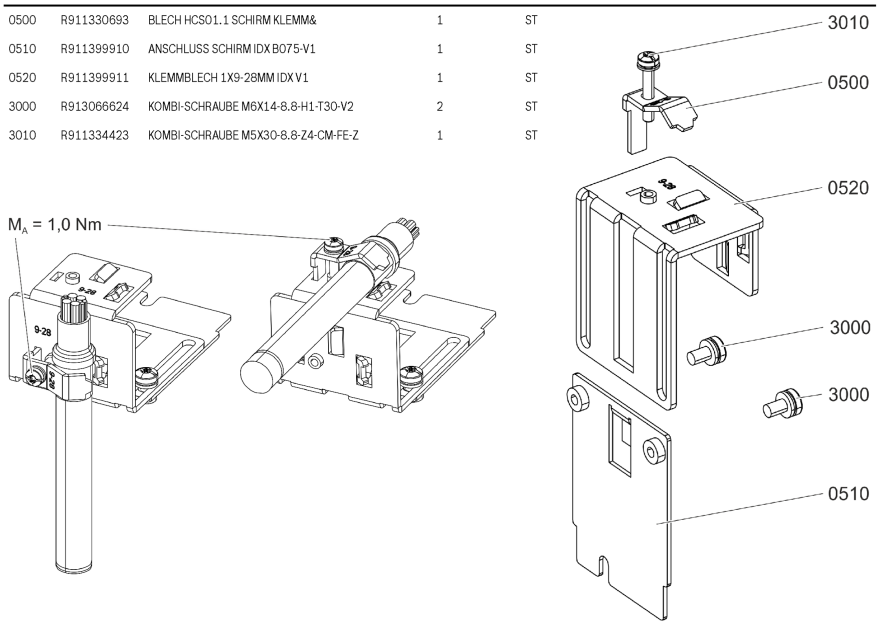


BEIPACKZETTEL XAS2-005-003-NN, R911399902, AB 2020-05, **Bosch Rexroth AG**

Fig. 6: Product insert XAS2-005-003-NN

## XAS2-006-003-NN

rexroth
A Bosch Company

XAS2-006-003-NN

Beipackzettel

**R911401858**
**AA 2020-01**

R911401855

| Position | Mat.-Nr. | Benennung | Menge | Einheit |
|---|---|---|---|---|
| 0500 | R911330693 | BLECH HCS01.1 SCHIRM KLEMM& | 1 | ST |
| 0510 | R911401857 | ANSCHLUSS SCHIRM IDX B100-V1 | 1 | ST |
| 0520 | R911399911 | KLEMMBLECH 1X9-28MM IDX V1 | 1 | ST |
| 3000 | R913066624 | KOMBI-SCHRAUBE M6X14-8.8-H1-T30-V2- | 2 | ST |
| 3010 | R911334423 | KOMBI-SCHRAUBE M5X30-8.8-Z4-CM-FE-Z | 1 | ST |

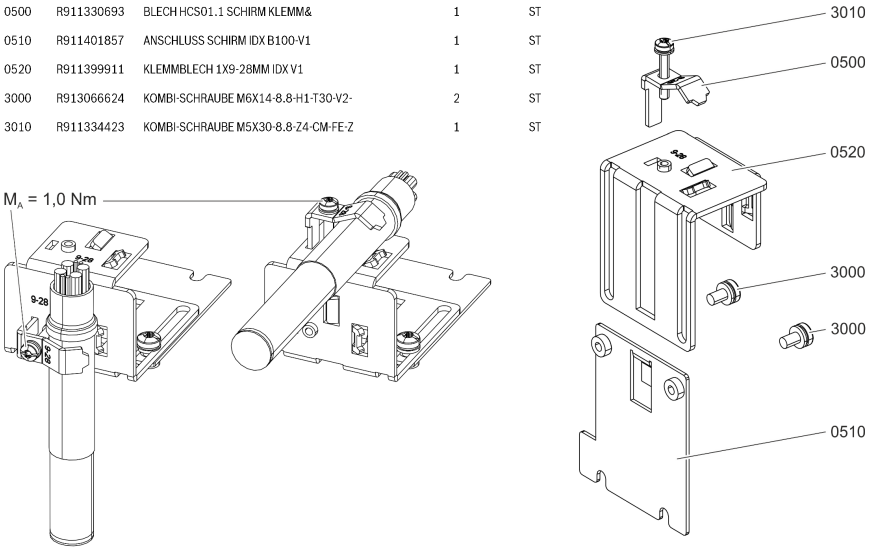


BEIPACKZETTEL XAS2-006-003-NN, R911401858, AA 2020-01, Bosch Rexroth AG

Fig. 7: Product insert XAS2-006-003-NN

## XAS2-007-001-NN

rexroth
A Bosch Company

XAS2-007-001-NN

Beipackzettel

**R911404781**
**AA 2020-08**

R911404806

| Position | Mat.-Nr. | Benennung | Menge | Einheit |
|---|---|---|---|---|
| 0500 | R911401255 | Shield connector xMS150 180G | 1 | ST |
| 0510 | R911401118 | Clamp shield xCS150 180G | 1 | ST |
| 3000 | R911342607 | SCREW WASHER ASSEM M8X40-8.8-T40-CM-FE-& | 2 | ST |
| 3010 | R911221473 | MUTTER-KOM-M 6,0-D12-H06,70 A2-B | 2 | ST |

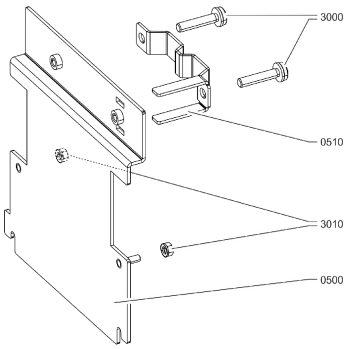


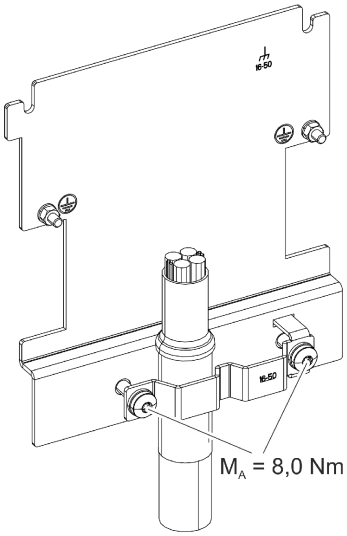


BEIPACKZETTEL XAS2-007-001-NN, R911404781, AA 2020-08, **Bosch Rexroth AG**

Fig. 8: Product insert XAS2-007-001-NN

## XAS2-007-002-NN

rexroth
A Bosch Company

XAS2-007-002-NN

Beipackzettel

**R911404782**
**AA 2020-08**

R911404807

| Position | Mat.-Nr. | Benennung | Menge | Einheit |
|---|---|---|---|---|
| 0500 | R911401256 | Shield connector xMS150 90G | 1 | ST |
| 0510 | R911401254 | Clamp shield xCS150 90G | 2 | ST |
| 0520 | R911392930 | MOUNTING ARM SCHIRM IDX B350 90G | 1 | ST |
| 0530 | R911397084 | MOUNTING ARM SCHIRM IDX B350 90 V1 | 1 | ST |
| 3000 | R911342607 | SCREW WASHER ASSEM M8X40-8.8-T40-CM-FE-& | 2 | ST |
| 3010 | R911221473 | MUTTER-KOM-M 6,0-D12-H06,70 A2-B | 2 | ST |

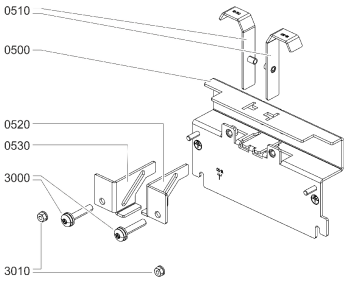


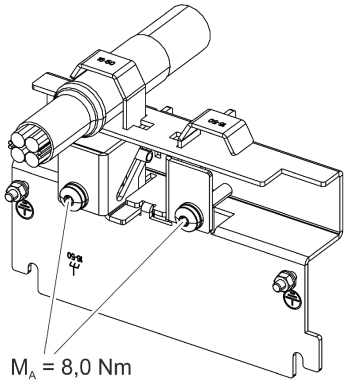


BEIPACKZETTEL XAS2-007-002-NN, R911404782, AA 2020-08, **Bosch Rexroth AG**

Fig. 9: Product insert XAS2-007-002-NN

## XAS2-008-001-NN

rexroth
A Bosch Company

XAS2-008-001-NN

Beipackzettel

**R911404783**
**AA 2020-08**

R911404808

| Position | Mat.-Nr. | Benennung | Menge | Einheit |
|---|---|---|---|---|
| 0500 | R911401116 | Shield connector xCS150 180G | 1 | ST |
| 0510 | R911401118 | Clamp shield xCS150 180G | 1 | ST |
| 3000 | R911342607 | SCREW WASHER ASSEM M8X40-8.8-T40-CM-FE-& | 2 | ST |
| 3010 | R911221473 | MUTTER-KOM-M 6,0-D12-H06,70 A2-B | 2 | ST |

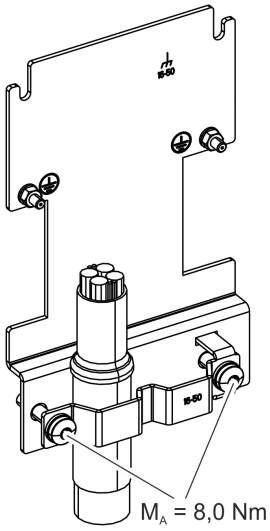


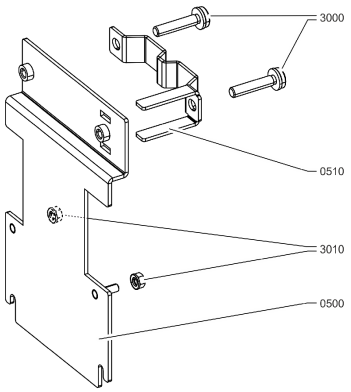


BEIPACKZETTEL XAS2-008-001-NN, R911404783, AA 2020-08, **Bosch Rexroth AG**

Fig. 10: Product insert XAS2-008-001-NN

## XAS2-008-002-NN

rexroth
A Bosch Company

XAS2-008-002-NN

Beipackzettel

**R911404784**
**AA 2020-08**

R911404809

| Position | Mat.-Nr. | Benennung | Menge | Einheit |
|---|---|---|---|---|
| 0500 | R911401117 | Shield connector xCS150 90G | 1 | ST |
| 0510 | R911401254 | Clamp shield xCS150 90G | 2 | ST |
| 0520 | R911392930 | MOUNTING ARM SCHIRM IDX B350 90G | 1 | ST |
| 0530 | R911397084 | MOUNTING ARM SCHIRM IDX B350 90 V1 | 1 | ST |
| 3000 | R911342607 | SCREW WASHER ASSEM M8X40-8.8-T40-CM-FE-& | 2 | ST |
| 3010 | R911221473 | MUTTER-KOM-M 6,0-D12-H06,70 A2-B | 2 | ST |

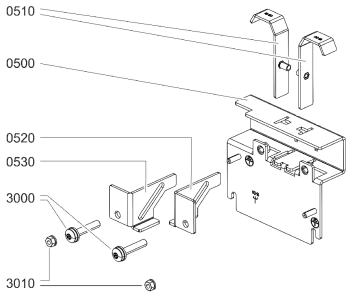


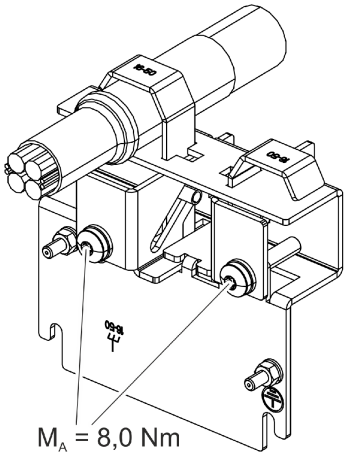


BEIPACKZETTEL XAS2-008-002-NN, R911404784, AA 2020-08, **Bosch Rexroth AG**

Fig. 11: Product insert XAS2-008-002-NN

## XAS2-009-003-NN

rexroth
A Bosch Company

XAS2-009-003-NN

Beipackzettel

**R911419839**
**AA 2023-01**

R911419881

| Position | Mat.-Nr. | Benennung | Menge | Einheit |
|---|---|---|---|---|
| 0500 | R911330693 | BLECH HCS01.1 SCHIRM KLEMM& | 1 | ST |
| 0510 | R911419851 | KLEMMBLECH 1X9-28MM UNTEN IDX B& | 1 | ST |
| 0520 | R911419854 | KLEMMBLECH 1X9-28MM HINTEN IDX & | 1 | ST |
| 3000 | R911334423 | KOMBI-SCHRAUBE M5X30-8.8-Z4-CM-FE-Z | 1 | ST |

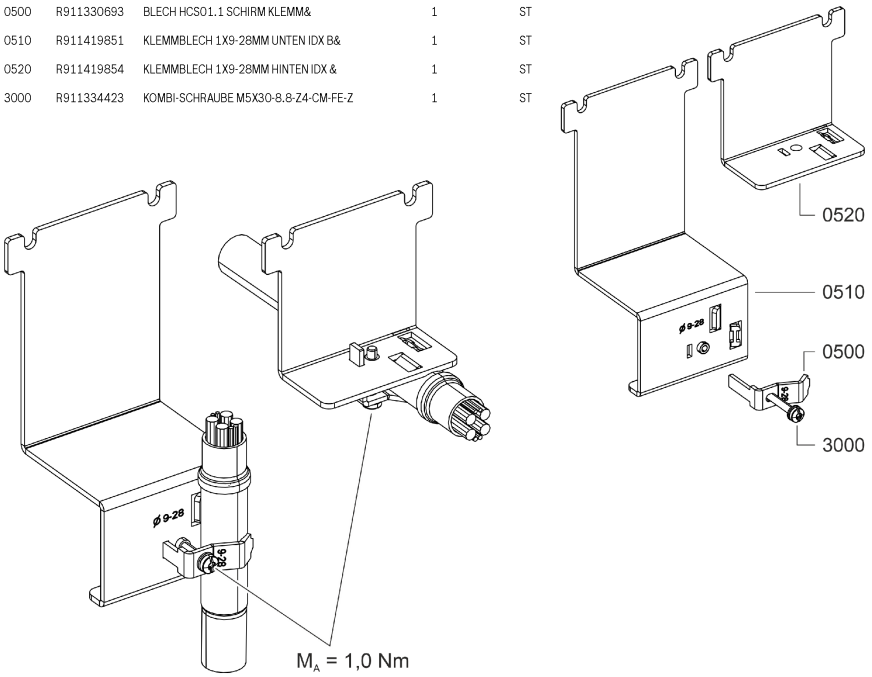


BEIPACKZETTEL XAS2-009-003-NN, R911419839, AA 2023-01, **Bosch Rexroth AG**

Fig. 12: Product insert XAS2-009-003-NN

### 5.1.3 Clamping plate (XAS2-xxx-001-NN)

**Distance between cable and drive controller**

Use the values of the table below to determine the distance between the cable and the drive controller and to plan the control cabinet ducts.

The values apply to Rexroth cables and the maximum cable diameter.

Table 11: Distance between cable and drive controller

| Device | XAS2-xxx-001-NN |
|---|---|
| | Cable outlet downwards |
| | 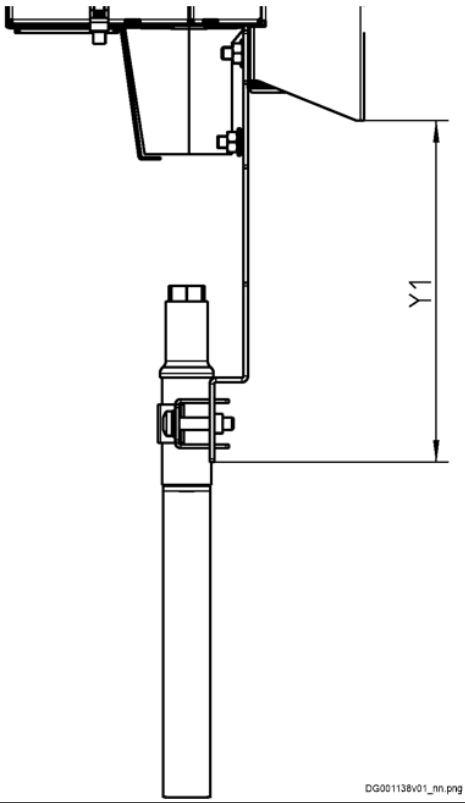 |
| XCS*-W0210/250/280/330/375 | Y1: 223 |
| XMS*-W0210/250/280/330/375 | Y1: 223 |
| XCS*-W0150/180 | Y1: 176.5 |
| XMS*-W0150/180 | Y1: 176.5 |
| **Y1:** Distance between clamping plate and drive controller | |

### 5.1.4 Clamping plate (XAS2-xxx-002-NN)

**Distance between cable and drive controller**

Use the values of the table below to determine the distance between the cable and the drive controller and to plan the control cabinet ducts.

The values apply to Rexroth cables and the maximum cable diameter.

Table 12: Distance between cable and drive controller

| Device | XAS2-xxx-002-NN |
|---|---|
| | Cable outlet backwards |
| | 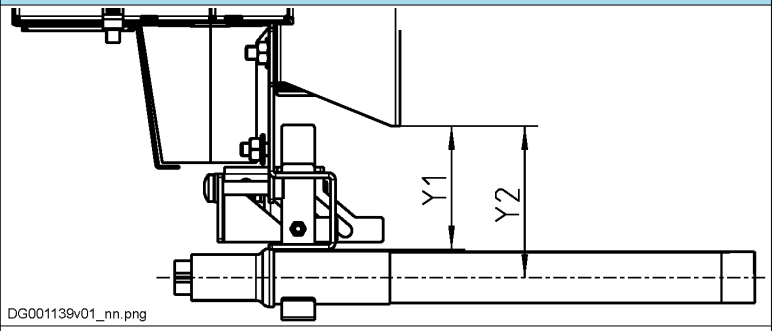 |
| XCS*-W0210/250/280/330/375 | Y1: 74 |
| XMS*-W0210/250/280/330/375 | Y1: 74 |
| XCS*-W0150/180 | Y1: 66.5 |
| XMS*-W0150/180 | Y1: 66.5 |
| | **Y1:** Distance between clamping plate and drive controller<br>**Y2:** Y2 = Y1 + (0.5 × cable diameter) |

### 5.1.5 Clamping plate (XAS2-xxx-003-NN)

**Positions**

| | |
|---|---|
| 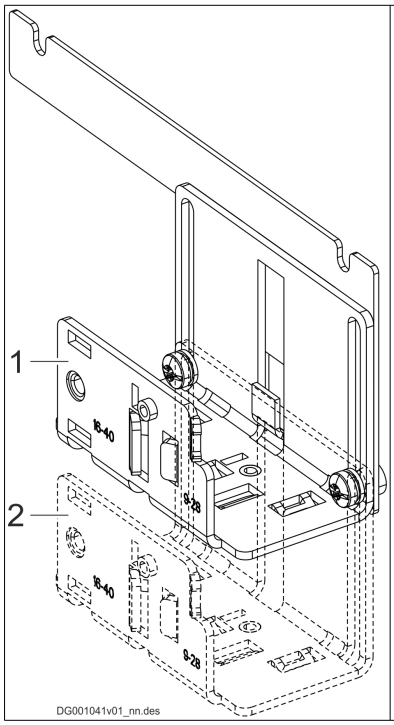 | When using XAS2-xxx-003 accessories, mount the cable with the cable outlet facing backwards **or** with the cable outlet facing downwards.<br>Clamping plate positions:<br>**1)** Position with cable outlet facing **backwards**<br>**2)** Position with cable outlet facing **downwards**<br><br>With **Coldplate devices**, only the cable outlet facing **downwards** is possible. |

### Distance between cable and drive controller

Use the values of the table below to determine the distance between the cable and the drive controller and to plan the control cabinet ducts.

The values apply to Rexroth cables and the maximum cable diameter.

Table 13: Distance between cable and drive controller

| Device | XAS2-xxx-003-NN | |
|---|---|---|
| | Cable outlet downwards | Cable outlet backwards[1)] |
| | 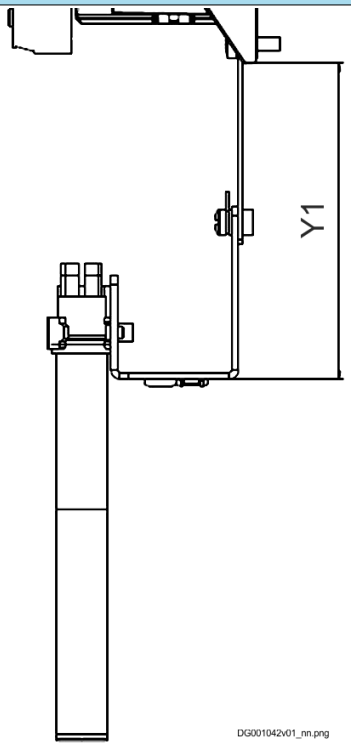 | 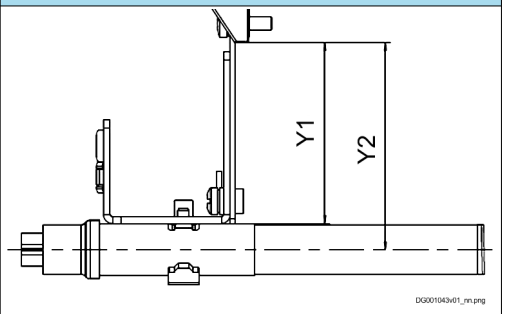 |
| XMD*-W5454/7070 | Y1: 141 | Y1: 81 |
| XCS*-W0100/120 | Y1: 141 | Y1: 81 |
| XMS*-W0100/120 | Y1: 136 | Y1: 75.5 |
| XMS*-W0054/70/90 | Y1: 144 | Y1: 79 |
| XCS*-W0054/70 | Y1: 144 | Y1: 79 |
| XCS*-W0090 | Y1: 167.5 | Y1: 68.5 |
| **Y1:** Distance between clamping plate and drive controller<br>**Y2:** Y2 = Y1 + (0.5 × cable diameter)<br>**1)** With **Coldplate devices**, only the cable outlet facing **downwards** is possible. | | |

## 5.2 XAS4, DC bus adapter

### 5.2.1 Purpose

The accessory is used for DC bus connection of devices that have not been mounted side by side (e.g., for multiline device arrangement in the control cabinet).

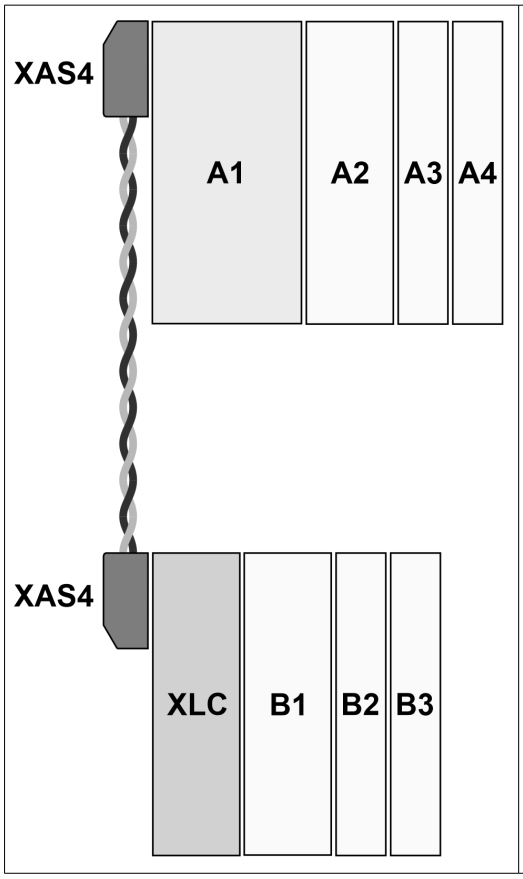


XAS4: DC bus adapter

Drive package A:

- A1: Supply unit/converter
- A2, A3, A4: Inverter

Drive package B:

- B1, B2, B3: Inverter
- XLC: DC bus capacitor unit

Further information: See Project Planning Manual "ctrlX DRIVE Drive Systems" [R911386578 (de), R911386579 (en)]

## 5.3 ctrlX DRIVE panel

### 5.3.1 XDP1

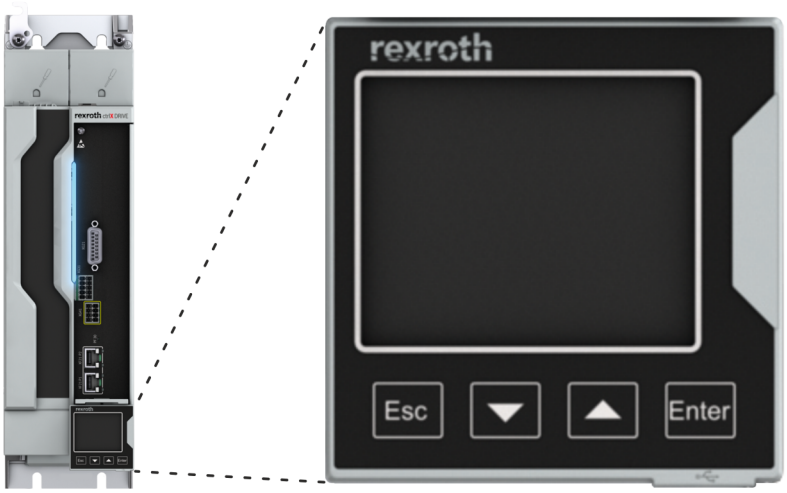


Fig. 13: Panel XDP1

Table 14: Type code of panel

| Short type designation | 1 | 2 | 3 | 4 | 5 | 6 | 7 | 8 | 9 | 10 | 11 | 12 | 13 | 14 | 15 | 16 | 17 | 18 | 19 | 20 | 21 | 22 | 23 | 24 | 25 | 26 | 27 | 28 | 29 | 30 | 31 | 32 | 33 | 34 | 35 | 36 | 37 | 38 | 39 | 40 |
|---|---|---|---|---|---|---|---|---|---|---|---|---|---|---|---|---|---|---|---|---|---|---|---|---|---|---|---|---|---|---|---|---|---|---|---|---|---|---|---|---|
| Example: | X | D | P | 1 | - | N | - | 1 | 2 | 8 | - | N | N | - | V | S | R | S | N | - | N | N | | | | | | | | | | | | | | | | | | |
| | ① | | | | | ② | | ③ | | | | ④ | | | ⑤ | | ⑥ | | ⑦ | | ⑧ | | | | | | | | | | | | | | | | | | | |
| ① | **Product:**<br>XDP1 = ctrlX DRIVE Panel | | | | | | | | | | | | | | | | | | | | | | | | | | | | | | | | | | | | | | | |
| ② | **Wireless data carrier:**<br>N = Without | | | | | | | | | | | | | | | | | | | | | | | | | | | | | | | | | | | | | | | |
| ③ | **Internal memory:**<br>128 = 128 MB | | | | | | | | | | | | | | | | | | | | | | | | | | | | | | | | | | | | | | | |
| ④ | **Other designs:**<br>NN = None | | | | | | | | | | | | | | | | | | | | | | | | | | | | | | | | | | | | | | | |
| ⑤ | **Panel firmware version:**<br>VS = current version | | | | | | | | | | | | | | | | | | | | | | | | | | | | | | | | | | | | | | | |
| ⑥ | **Panel firmware release:**<br>RS = Current release | | | | | | | | | | | | | | | | | | | | | | | | | | | | | | | | | | | | | | | |
| ⑦ | **Export licenses required:**<br>N = No | | | | | | | | | | | | | | | | | | | | | | | | | | | | | | | | | | | | | | | |
| ⑧ | **Miscellaneous:**<br>NN = None | | | | | | | | | | | | | | | | | | | | | | | | | | | | | | | | | | | | | | | |

### 5.3.2 Overview

Table 15: Panel

| Engineering tool for devices ctrlX DRIVE | | |
|---|---|---|
| Front | 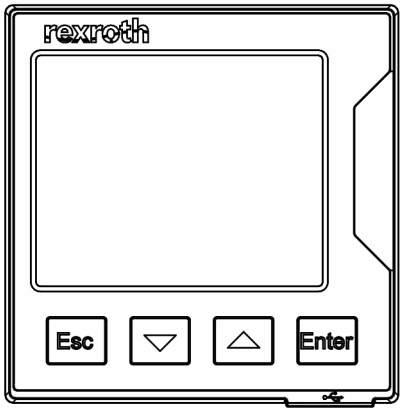 | • **TFT display**<br>• **4 keys:** [Esc], [▼], [▲], [Enter]<br>• **hot-plug-compatible**<br>• **dynamic QR code** to display information on mobile end devices<br>• **USB interface**<br>• **Flash memory** (128 MB, FAT) |
| Back | 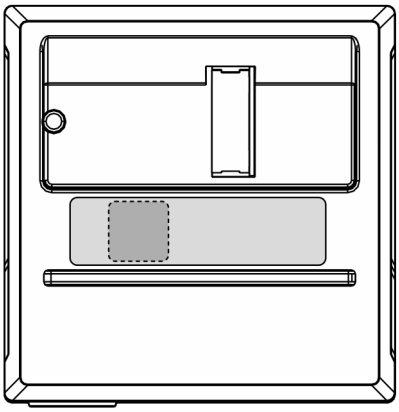 <br>**Type plates:**<br>• 10 × 10 mm:<br>Panel ordered as component of the device (CP-XDP1)<br>**or**<br>• 32 × 12 mm<br>Panel ordered as single component (XDP1-N-128-NN-VRSN-NN; R911403470) | <br>**Type plate (10 × 10 mm):**<br>1: 2D code<br>2: type<br>3: Hardware index<br>4: Production week (example: 20W38 indicates: year 2020, week 38)<br>5: Material number<br>6: Serial number<br> 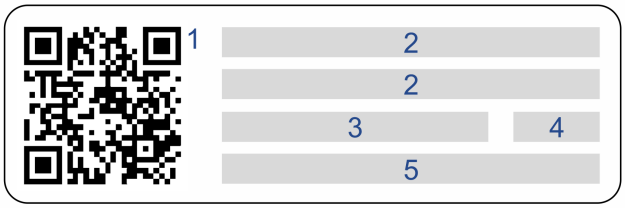 <br>**Type plate (32 × 12 mm):**<br>1: QR code<br>2: type<br>3: Material number<br>4: Hardware index<br>5: Serial number |

| Engineering tool for devices ctrlX DRIVE | |
|---|---|
| 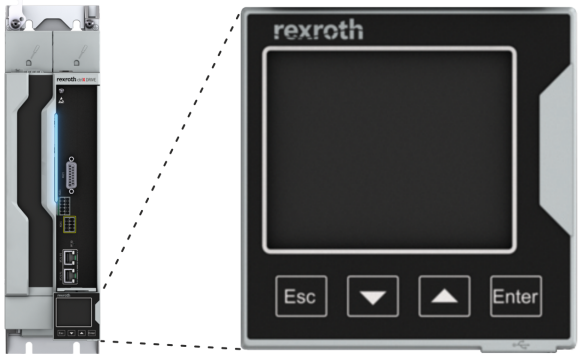  | Panel plugged on a ctrlX DRIVE device |

### 5.3.3 Operation modes

See also ➦"Use Panel at ctrlX DRIVE"

Table 16: Operation modes

| Operation mode [1] | | Description |
|---|---|---|
| Panel Engineering | 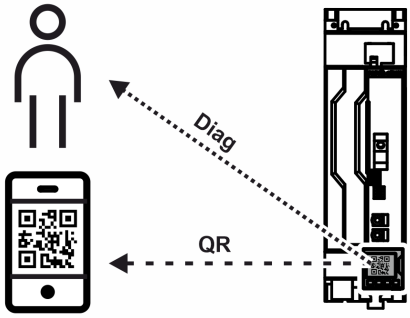  | Panel plugged on the ctrlX DRIVE device<br>• Diagnostic display (at panel and via QR code at mobile end devices)<br>• Menu options for ctrlX DRIVE devices and panel |
| USB Engineering | 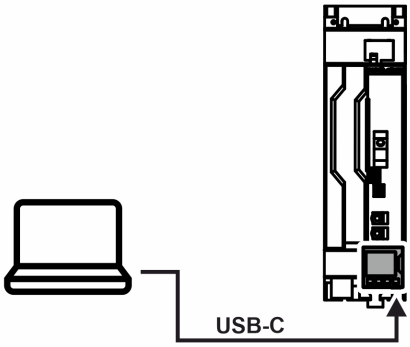  | Panel plugged on the ctrlX DRIVE device and connected to a Windows PC via USB cable |
| USB storage medium | | Panel is used as USB flash drive at a Windows PC (to save parameter sets, firmware downloads, diagnostic processes, etc.)<br>• FAT file system<br>• 128 MB |
| | | 1) Parallel operation of operation modes is not possible. |

## 5.4 Wear parts

The product does not have any wear parts.

# 6 Ambient conditions

## 6.1 Installation conditions

### 6.1.1 Ambient and operating conditions

| ⚠ WARNING | **Lethal electric shock due to live parts with more than 50 V!**<br>Only operate the device<br>– with connected connectors (even if no lines are connected to the connectors) and<br>– with connected equipment grounding conductor! |
|---|---|

**Control cabinet**

The devices in the ctrlX DRIVE product range, as well as their additional components (except for some braking resistors), have to be mounted **in control cabinets**.

Check that the ambient and operating conditions, in particular the control cabinet temperature, are complied with by calculating the heat levels in the control cabinet. Afterwards, make the corresponding measurements to confirm that ambient and operating conditions have actually been observed. In the technical data of the individual components, the power dissipation is specified as an important input value for calculating the heat levels.

Table 17: Ambient and operating conditions

| Designation | Symbol | Unit | Value |
|---|---|---|---|
| Conductive dirt contamination | | | Not allowed<br>(Conductive dirt contamination can be prevented, for example, by mounting the devices in control cabinets of the degree of protection IP54 in accordance with IEC529.) |
| Degree of protection (IEC529) | | | IP20 [2)] |
| Use within scope of CSA / UL | | | For use in NFPA 79 Applications only! |
| Installation altitude | $h_{nenn}$ | m | 1000 |
| Ambient temperature range | $T_{a\_work}$ | °C | 0 ... 40 |
| **Derating vs. ambient temperature:**<br>The performance data are reduced by the factor $F_{Ta}$ in the ambient temperature range $T_{a\_work\_red}$:<br>$F_{TA} = 1 - [(T_a - 40) \times f_{Ta}]$<br>Example: With an ambient temperature $T_a$ = 50 °C and a capacity utilization factor $f_{Ta}$ = 2%, the rated power is reduced to<br>$P_{DC\_cont\_red} = P_{DC\_cont} \times F_{Ta} =$<br>$P_{DC\_cont} \times (1 - [(50 - 40) \times 0.02]) = P_{DC\_cont} \times 0.8$<br>Operation at ambient temperatures outside of $T_{a\_work}$ and $T_{a\_work\_red}$ is not allowed! | 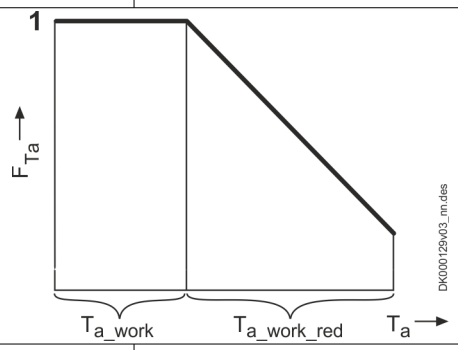 | | |
| | $T_{a\_work\_red}$ | °C | 40 ... 55 |
| | $f_{Ta}$ | %/K | 2 |

| Designation | Symbol | Unit | Value |
|---|---|---|---|
| **Derating vs. installation altitude:**<br>At an installation altitude h > $h_{nenn}$, the available performance data are reduced by the factor f[1].<br>At an installation altitude in the range $h_{max\_ohne}$ to $h_{max}$, voltage-limiting measures (overvoltage limiters) have to be installed at the mains connection of the drive system.<br>Use above $h_{max}$ is not allowed! | | | 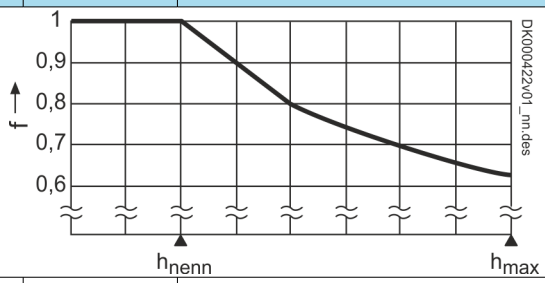 |
| | $h_{max\_ohne}$ | m | 2000 |
| | $h_{max}$ | m | 4000 |
| **Simultaneous derating** for ambient temperature [°C] **and** installation altitude [m] | | | allowed;<br>Reduce performance data with the product **f × $F_{Ta}$** |

**Derating factors (for $f_{Ta}$ = 2 %/K)**

| [°C] | [m] | | |
|---|---|---|---|
| | 1000 | 2000 | 4000 |
| 25 | 1 | 1 | 0.82 |
| 30 | 1 | 0.96 | 0.76 |
| 35 | 1 | 0.88 | 0.69 |
| 40 | 1 | 0.8 | 0.62 |
| 45 | 0.9 | 0.72 | 0.57 |
| 50 | 0.8 | 0.64 | 0.5 |
| 55 | 0.7 | 0.56 | 0.44 |

| | | | |
|---|---|---|---|
| Relative humidity | | % | 5 ... 95 |
| Absolute humidity | | g/m³ | 1 ... 29 |
| Moisture condensation | | | Not allowed |
| Climatic category (IEC 60721-3-3) | | | 3K3 |
| Allowed pollution degree (IEC 60664-1) | | | 2 |
| Resistance to chemically active substances | | | Class 3C1 [3] |
| Shock/vibration category (IEC 60721-3-3) | | | 3M4 (data from historical standard) |
| Vibration resistance (sine, 5 - 9,2Hz, number of cycles: 10) | | mm (rms) | 3 |
| Vibration resistance (sine, 9,2 – 200Hz, number of cycles: 10) | | m/s² | 10 |
| Shock resistance (half sine, 3 shocks per spatial axis, a total of 18) | | m/s² | 100 (11 ms) |
| Overvoltage category | | | III (according to IEC60664-1) |

1) Reduced performance data for drive controllers: allowed DC bus continuous power, braking resistor continuous power, continuous current; additionally for converters: allowed mains voltage

2) Prerequisite for IP20: Connector plugged in at the device, all phases connected and touch guard of DC bus connection available at the device. Without connector at the device, phases not connected (e.g., 1-phase mains connection) or without touch guard of DC bus connection at the device: IP10

3) Resistance to hydrogen sulfide $H_2S$ tested according to ANSI/ISA-71.04 (Class G3) for 10 years

### 6.1.2 Control cabinet design and cooling system

G1 is the only mounting position allowed for supply units and drive controllers installed in control cabinets.

Table 18: Heat dissipation options

| Closed control cabinet with air circulation | Closed control cabinet with heat exchanger | Control cabinet with fan | Closed control cabinet with air conditioning unit |
|---|---|---|---|
| 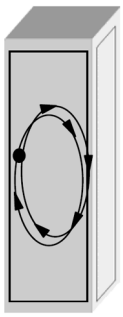 DF000644 | 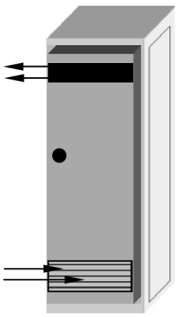 DF000645 | 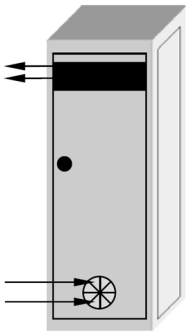 DF000646 | 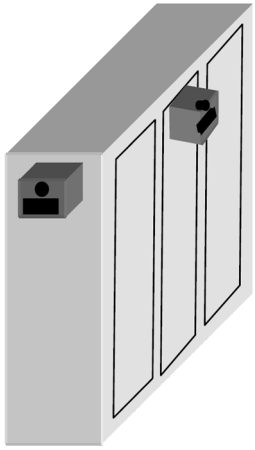 DF000647 |

The paragraphs below are about the "Control cabinet with fan".

#### Requirements on control cabinets with fan

| NOTICE | **Risk of damage due to polluted air in the control cabinet!**<br>If you operate a control cabinet with fan without appropriate filters, the devices may be damaged or malfunctions may occur. |
|---|---|

- Install filters at the air inlet of the control cabinet to prevent polluted air from entering the control cabinet.
- Maintain the filters regularly according to the dust load in the environment.
- Only change the filters when the fan is switched off, otherwise the loosening dirt will be sucked in by the fan and get into the control cabinet.

**Ventilation of the control cabinet (schematic diagram)**

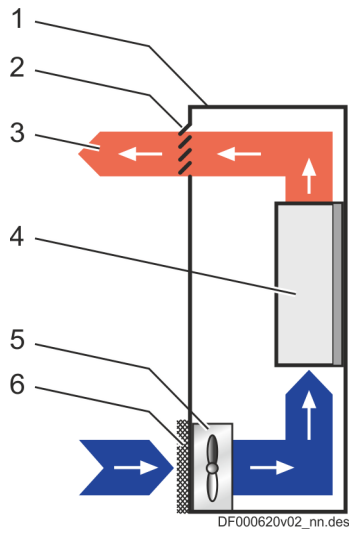


Fig. 14: Ventilation of the control cabinet (schematic diagram)
1 Control cabinet
2 Air outlet opening
3 Heat dissipation
4 Device in the control cabinet
5 Control cabinet fan
6 Filter at the air intake opening

Only clean air gets into the control cabinet through the filter at the air intake opening. The control cabinet fan behind the air inlet opening transports air into the control cabinet and generates overpressrue within it. The overpressure prevents polluted air from entering the control cabinet through possible leaks (leaking cable feedthroughs, damaged sealings, ...).

### 6.1.3 Compatibility with foreign materials

All Rexroth controls and drives are developed and tested to the state-of-the-art.

However, since it is impossible to follow the continuous development of all substances with which the controls and drives may come into contact (e.g., lubricants on machine tools), reactions with the materials we use cannot always be excluded.

For this reason, you must carry out a compatibility test between new lubricants, cleaning agents etc. and our housings/materials before use.

## 6.2 Transporting the components

Table 19: Ambient and operating conditions - transport

| Designation | Symbol | Unit | Value |
|---|---|---|---|
| Temperature range | $T_{a\_tran}$ | °C | -25 ... +70 |
| Relative humidity | | % | 5 ... 95 |
| Absolute humidity | | g/m³ | 1 ... 60 |
| Climatic category (IEC721) | | | 2K3 |
| Moisture condensation | | | Not allowed |
| Icing | | | Not allowed |

## 6.3 Storing the components

**NOTICE**

**Risk of damage to components from long-term storage!**

Some components contain electrolytic capacitors which may deteriorate during storage.

When storing the following components for a longer period of time, run them **once a year for at least 1 hour**:

- Converters and supply units: Operated with mains voltage $U_{LN}$
- Inverters and DC bus capacitor units: Operated with DC bus voltage $U_{DC}$

Table 20: Ambient and operating conditions - storage

| Designation | Symbol | Unit | Value |
|---|---|---|---|
| Temperature range | $T_{a\_store}$ | °C | -25 ... +55 |
| relative humidity | | % | 5 ... 95 |
| Absolute humidity | | g/m³ | 1 ... 29 |
| Climatic category (IEC721) | | | 1K3 |
| Moisture condensation | | | Not permitted |
| Icing | | | Not permitted |

# 7 Technical data

## 7.1 Drive controllers

### 7.1.1 XCS

Table 21: UL ratings and dimensions (XCS*-W0010 ... W0180)

| Description | Symbol | Unit | XCS*-W0010 | XCS*-W0023 | XCS*-W0054 | XCS*-W0070 | XCS*-W0090 | XCS*-W0100 | XCS*-W0120 | XCS*-W0150 | XCS*-W0180 |
|---|---|---|---|---|---|---|---|---|---|---|---|
| Listing according to UL standard | | | UL 61800-5-1 | | | | tbd | UL 61800-5-1 | | | |
| Listing according to CSA standard | | | C22.2 No. 274-17 | | | | tbd | C22.2 No. 274-17 | | | |
| UL files | | | E134201 | | | | tbd | E134201 | | E328841 | |
| Pollution degree | | | 2 | | | | | | | | |
| Ambient temperature range with nominal data | $T_{amax}$ | °C | 40 | | | | | | | | |
| Mass | m | kg | 3 | | 5.8 | | 6.85 | 10.3 | | 17 | |
| Device height[1)] | H | mm | 309 | | | | | | | 340.5 | |
| Device depth[2)] | T | mm | 196.5 | | | | | | | | |
| Device width[3)] | B | mm | 50 | | 100 | | 125 | 225 | | | |
| Minimum distance on the top of the device[4)] | $d_{top}$ | mm | 80 | | | | | | | | |
| Minimum distance on the bottom of the device[5)] | $d_{bot}$ | mm | 80 | | | | | | | | |
| Horizontal spacing at the device[6)] | $d_{hor}$ | mm | • **0**<br>For devices of the ctrlX DRIVE product range in the DC bus group (central supply)<br>• **1.5**<br>For devices of the ctrlX DRIVE product range outside of the DC bus group (individual supply)<br>• **10**<br>For everything else | | | | | | | | |
| Rated control voltage input[7)] | $U_{N3}$ | V | 24 | | | | | | | | |
| Rated control current input[8)] | $I_{N3}$ | A | 3.9 | | 5.3 | | | 4.6 | | 7.1 | |
| Short circuit current rating | SCCR | A rms | 42000 | | | | tbd | 42000 | | | |
| Rated input voltage, power[9)] | $U_{LN\_nenn}$ | V | 3 × AC 200Y/115V ... 500Y/289V | | | | | | | | |
| Mains frequency | $f_{LN}$ | Hz | 50 ... 60 | | | | | | | | |
| Rated input current | $I_{LN}$ | A | AC 5.8 | | AC 26.6 | AC 34.5 | AC 44.4 | AC 78 | | AC 101 | AC 115 |
| Branch circuit protection fuse[10)] | | | 10 A Class J | | 35 A Class J | 50 A Class J | 70 A Class J | 100 A Class J | | 150 A Class J | |
| Required wire size in accordance with UL 508 A (internal wiring);[11)] | $A_{LN}$ | AWG | 14 | | 8 | | 6 | 3 | | 1/0 | |

| Description | Symbol | Unit | XCS*-W0010 | XCS*-W0023 | XCS*-W0054 | XCS*-W0070 | XCS*-W0090 | XCS*-W0100 | XCS*-W0120 | XCS*-W0150 | XCS*-W0180 |
|---|---|---|---|---|---|---|---|---|---|---|---|
| Field wiring material (material; conductor temperature; class) | | | Cu; 75 °C; 1 | | | | | | | | |
| Output voltage | $U_{out}$ | V | AC 0 ... 500<br>DC 280 ... 710 | | | | | | | | |
| Output current | $I_{out}$ | A | AC 3.3<br>DC 3.8 | AC 7.7<br>DC 3.8 | AC 27<br>DC 29.4 | AC 35<br>DC 38.2 | AC 45<br>DC 49 | AC 67<br>DC 87 | AC 71<br>DC 87 | AC 100<br>DC 118 | AC 120<br>DC 133 |
| Maximum allowed DC bus power ($U_{LN\ AC\ 400V}$) | $P_{out}$ | kW | 7.99 | | 31.8 | 41.2 | 53 | 67.5 | 90 | 88.3 | 106 |
| Output frequency range[12)] | $f_{out}$ | Hz | 0 ... 1600 | | | | | | | | |

Table 22: UL ratings and dimensions (XCS*-W0210 ... W0375)

| Description | Symbol | Unit | XCS*-W0210 | XCS*-W0250 | XCS*-W0280 | XCS*-W0330 | XCS*-W0375 |
|---|---|---|---|---|---|---|---|
| Listing according to UL standard | | | UL 61800-5-1 | | | | |
| Listing according to CSA standard | | | C22.2 No. 274-17 | | | | |
| UL files | | | E134201 | | | E328841 | |
| Pollution degree | | | 2 | | | | |
| Ambient temperature range with nominal data | $T_{amax}$ | °C | 40 | | | | |
| Mass | m | kg | 27 | | | 28 | |
| Device height[1)] | H | mm | 340.5 | | | | |
| Device depth[2)] | T | mm | 196.5 | | | | |
| Device width[3)] | B | mm | 350 | | | | |
| Minimum distance on the top of the device[4)] | $d_{top}$ | mm | 80 | | | | |
| Minimum distance on the bottom of the device[5)] | $d_{bot}$ | mm | 80 | | | | |
| Horizontal spacing at the device[6)] | $d_{hor}$ | mm | • **0**<br>For devices of the ctrlX DRIVE product range in the DC bus group (central supply)<br>• **1.5**<br>For devices of the ctrlX DRIVE product range outside of the DC bus group (individual supply)<br>• **10**<br>For everything else | | | | |
| Rated control voltage input[7)] | $U_{N3}$ | V | 24 | | | | |
| Rated control current input[8)] | $I_{N3}$ | A | 6.9 | | | 11.5 | |
| Short circuit current rating | SCCR | A rms | 42000 | | | | |
| Rated input voltage, power[9)] | $U_{LN\_nenn}$ | V | AC 200Y/115V ... 500Y/289V | | | | |
| Mains frequency | $f_{LN}$ | Hz | 50 ... 60 | | | | |

| Description | Symbol | Unit | XCS*-W0210 | XCS*-W0250 | XCS*-W0280 | XCS*-W0330 | XCS*-W0375 |
|---|---|---|---|---|---|---|---|
| Rated input current | $I_{LN}$ | A | AC 148 | AC 160 | AC 176 | AC 183 | AC 197 |
| Branch circuit protection fuse[10)] | | | 250 A Class J | | | | |
| Required wire size in accordance with UL 508 A (internal wiring);[11)] | $A_{LN}$ | AWG | kcmil 250 | | | 2 × 2/0 | |
| Field wiring material (material; conductor temperature; class) | | | Cu; 75 °C; 1 | | | | |
| Output voltage | $U_{out}$ | V | AC 0 ... 500<br>DC 280 ... 710 | | | | |
| Output current | $I_{out}$ | A | AC 140<br>DC 163 | AC 147<br>DC 176 | AC 165<br>DC 195 | AC 194<br>DC 223 | AC 221<br>DC 255 |
| Maximum allowed DC bus power ($U_{LN\ AC\ 400V}$) | $P_{out}$ | kW | 167 | 192 | 210 | | |
| Output frequency range[12)] | $f_{out}$ | Hz | 0 ... 1600 | | | | |

1) 2) 3) Housing dimension

4) 5) 6) See fig. "Air intake and air outlet at device"

7) Comply with supply voltage for motor holding brake; the following power supply unit has to be used in the scope of CSA/UL: ● UL508-certified ● output voltage: DC 24V ● output current: ≤ 31 A; for power supply units with output current > 31 A: install fuses in accordance with UL248

8) See information on "Rated power consumption control voltage input at $U_{N3}$"

9) Mains input L1, L2, L3; For use on a solidly grounded wye source only.

10) Use cUL-listed fuses. Suitable for use on a circuit capable of delivering not more than 42000 rms symmetrical amperes, 500 Volts maximum. If using inverse-time circuit breakers (in this case, you are obligated to prove opposite UL that an appropriate circuit breaker was used) or type E combination motor controllers instead of recommended fuses, see UL 61800-5-1, section 5.2.3.6.2DV.4.1.3.

11) Copper wire; PVC-insulation (conductor temperature 75 °C; Ta ≤ 40 °C) in accordance with NFPA 79 chapter 12 and UL 508A chapter 28

12) Depending on switching frequency which was set in parameter P-0-0001

**Rated power consumption control voltage input at $U_{N3}$**

Plus motor holding brake and control section, plus safety option

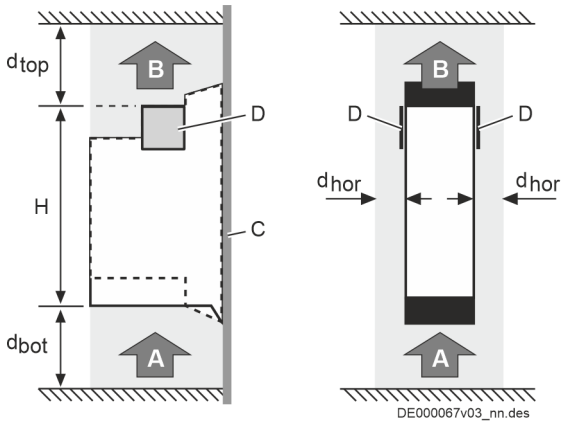


Fig. 15: Air intake and air outlet at device

A Air intake
B Air outlet
C Mounting surface in the control cabinet
D Touch guard plate at device (thickness: 1.5 mm = $d_{hor}$ for individual supply); thus, with two individually supplied devices mounted side by side there is no distance (0 mm) between the touch guard plates, and below the touch guard plates there is a distance of 3 mm (2 × 1.5 mm)
H Device height
$d_{top}$ Distance top
$d_{bot}$ Distance bottom
$d_{hor}$ Distance horizontal

### 7.1.2 XCD

Table 23: UL ratings and dimensions (XCD)

| Designation | Symbol | Unit | XCD*-W2323 |
|---|---|---|---|
| Listing according to UL standard | | | UL 61800-5-1 |
| Listing according to CSA standard | | | C22.2 No. 274-17 |
| UL files | | | E134201 |
| Pollution degree | | | 2 |
| Ambient temperature range with nominal data | $T_{amax}$ | °C | 40 |
| Mass | m | kg | 5.7 |
| Device height[1)] | H | mm | 309 |
| Device depth[2)] | T | mm | 196.5 |
| Device width[3)] | B | mm | 100 |
| Minimum distance on the top of the device[4)] | $d_{top}$ | mm | 80 |
| Minimum distance on the bottom of the device[5)] | $d_{bot}$ | mm | 80 |
| Horizontal spacing at the device[6)] | $d_{hor}$ | mm | ● **0**<br>For devices of the ctrlX DRIVE product range in the DC bus group (central supply)<br>● **1.5**<br>For devices of the ctrlX DRIVE product range outside of the DC bus group (individual supply)<br>● **10**<br>For everything else |
| Rated control voltage input[7)] | $U_{N3}$ | V | 24 |
| Rated control current input[8)] | $I_{N3}$ | A | 6.6 |
| Short circuit current rating | SCCR | A rms | 42000 |
| Rated input voltage, power[9)] | $U_{LN\_nenn}$ | V | AC 200Y/115V ... 500Y/289V |
| Mains frequency | $f_{LN}$ | Hz | 50 ... 60 |
| Rated input current | $I_{LN}$ | A | 26.6 |
| Branch circuit protection fuse[10)] | | | 35 A Class J |
| Required wire size in accordance with UL 508 A (internal wiring);[11)] | $A_{LN}$ | AWG | 8 |
| Field wiring material (material; conductor temperature; class) | | | Cu; 75 °C; 1 |
| Output voltage | $U_{out}$ | V | AC 0 ... 500<br>DC 280 ... 710 |
| Output current | $I_{out}$ | A | 2 × AC 7.7<br>DC 29.4 |
| Maximum allowed DC bus power ($U_{LN\ AC\ 400V}$) | $P_{out}$ | kW | 31.8 |
| Output frequency range[12)] | $f_{out}$ | Hz | 0 ... 1600 |

1) 2) 3) Housing dimension

4) 5) 6) See fig. "Air intake and air outlet at device"

7) Comply with supply voltage for motor holding brake; the following power supply unit has to be used in the scope of CSA/UL: ● UL508-certified ● output voltage: DC 24V ● output current: ≤ 31 A; for power supply units with output current > 31 A: install fuses in accordance with UL248

8) See information on "Rated power consumption control voltage input at $U_{N3}$"

9) Mains input L1, L2, L3; For use on a solidly grounded wye source only.

10) Use cUL-listed fuses. Suitable for use on a circuit capable of delivering not more than 42000 rms symmetrical amperes, 500 Volts maximum. If using inverse-time circuit breakers (in this case, you are obligated to prove opposite UL that an appropriate circuit breaker was used) or type E combination motor controllers instead of recommended fuses, see UL 61800-5-1, section 5.2.3.6.2DV.4.1.3.

11) Copper wire; PVC-insulation (conductor temperature 75 °C; Ta ≤ 40 °C) in accordance with NFPA 79 chapter 12 and UL 508A chapter 28

12) Depending on switching frequency which was set in parameter P-0-0001

**Rated power consumption control voltage input at $U_{N3}$**

Plus motor holding brake and control section, plus safety option

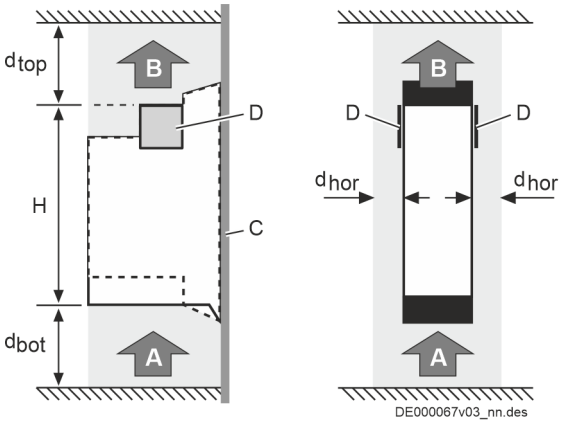


Fig. 16: Air intake and air outlet at device

A Air intake
B Air outlet
C Mounting surface in the control cabinet
D Touch guard plate at device (thickness: 1.5 mm = $d_{hor}$ for individual supply); thus, with two individually supplied devices mounted side by side there is no distance (0 mm) between the touch guard plates, and below the touch guard plates there is a distance of 3 mm (2 × 1.5 mm)
H Device height
$d_{top}$ Distance top
$d_{bot}$ Distance bottom
$d_{hor}$ Distance horizontal

### 7.1.3 XMS

#### XMS*-W...

Table 24: UL ratings and dimensions (XMS*-W0006 ... 0036)

| Designation | Symbol | Unit | XMS*-W0006 | XMS*-W0010 | XMS*-W0016 | XMS*-W0023 | XMS*-W0030 | XMS*-W0036 |
|---|---|---|---|---|---|---|---|---|
| Listing according to UL standard | | | UL 61800-5-1 | | | | | |
| Listing according to CSA standard | | | C22.2 No. 274-17 | | | | | |
| UL files | | | E134201 | | | | | |
| Pollution degree | | | 2 | | | | | |
| Ambient temperature range with nominal data | $T_{amax}$ | °C | 40 | | | | | |
| Mass | m | kg | 2.8 | | | | | |
| Device height[1)] | H | mm | 309 | | | | | |
| Device depth[2)] | T | mm | 196.5 | | | | | |
| Device width[3)] | B | mm | 50 | | | | | |
| Minimum distance on the top of the device[4)] | $d_{top}$ | mm | 80 | | | | | |
| Minimum distance on the bottom of the device[5)] | $d_{bot}$ | mm | 80 | | | | | |
| Horizontal spacing at the device[6)] | $d_{hor}$ | mm | ● **0**<br>For devices of the ctrlX DRIVE product range in the DC bus group (central supply)<br>● **1.5**<br>For devices of the ctrlX DRIVE product range outside of the DC bus group (individual supply)<br>● **10**<br>For everything else | | | | | |
| Rated control voltage input[7)] | $U_{N3}$ | V | 24 | | | | | |
| Rated control current input[8)] | $I_{N3}$ | A | 3.3 | | | | | |
| Short circuit current rating | SCCR | A rms | 42000 | | | | | |
| Rated input voltage, power[9)] | $U_{LN\_nenn}$ | V | DC 254 ... 750 | | | | | |
| Rated input current | $I_{LN}$ | A | DC 2.4 | DC 4.1 | DC 6.5 | DC 9.4 | DC 14.6 | DC 22 |
| Field wiring material (material; conductor temperature; class) | | | Cu; 75 °C; 1 | | | | | |
| Output voltage | $U_{out}$ | V | AC 0 ... 500 | | | | | |
| Output current | $I_{out}$ | A | AC 2 | AC 3.3 | AC 5.3 | AC 7.7 | AC 12 | AC 18 |
| Output frequency range[11)] | $f_{out}$ | Hz | 0 ... 1600 | | | | | |

1) 2) 3) Housing dimension

4) 5) 6) See fig. "Air intake and air outlet at device"

7) Comply with supply voltage for motor holding brake; the following power supply unit has to be used in the scope of CSA/UL: ● UL508-certified ● output voltage: DC 24V ● output current: ≤ 31 A; for power supply units with output current > 31 A: install fuses in accordance with UL248

8) See information on "Rated power consumption control voltage input at $U_{N3}$"

9) Mains input L1, L2, L3; For use on a solidly grounded wye source only.

10) Copper wire; PVC-insulation (conductor temperature 75 °C; Ta ≤ 40 °C) in accordance with NFPA 79 chapter 12 and UL 508A chapter 28

11) Depending on switching frequency which was set in parameter P-0-0001

Table 25: UL ratings and dimensions (XMS*-W0054 ... 0120)

| Description | Symbol | Unit | XMS*-W0054 | XMS*-W0070 | XMS*-W0090 | XMS*-W0100 | XMS*-W0120 |
|---|---|---|---|---|---|---|---|
| Listing according to UL standard | | | UL 61800-5-1 | | | | |
| Listing according to CSA standard | | | C22.2 No. 274-17 | | | | |
| UL files | | | E134201 | | | | |
| Pollution degree | | | 2 | | | | |
| Ambient temperature range with nominal data | $T_{amax}$ | °C | 40 | | | | |
| Mass | m | kg | 4.25 | | | 6.2 | |
| Device height[1)] | H | mm | 309 | | | | |
| Device depth[2)] | T | mm | 196.5 | | | | |
| Device width[3)] | B | mm | 75 | | | 125 | |
| Minimum distance on the top of the device[4)] | $d_{top}$ | mm | 80 | | | | |
| Minimum distance on the bottom of the device[5)] | $d_{bot}$ | mm | 80 | | | | |
| Horizontal spacing at the device[6)] | $d_{hor}$ | mm | ● **0**<br>For devices of the ctrlX DRIVE product range in the DC bus group (central supply)<br>● **1.5**<br>For devices of the ctrlX DRIVE product range outside of the DC bus group (individual supply)<br>● **10**<br>For everything else | | | | |
| Rated control voltage input[7)] | $U_{N3}$ | V | 24 | | | | |
| Rated control current input[8)] | $I_{N3}$ | A | 5.3 | | | 4.3 | |
| Short circuit current rating | SCCR | A rms | 42000 | | | | |
| Rated input voltage, power[9)] | $U_{LN\_nenn}$ | V | DC 254 ... 750 | | | | |
| Rated input current | $I_{LN}$ | A | DC 29.4 | DC 38.2 | DC 49.1 | DC 73 | DC 77 |
| Field wiring material (material; conductor temperature; class) | | | Cu; 60/75 °C; 1 | | | | |
| Output voltage | $U_{out}$ | V | AC 0 ... 500 | | | | |
| Output current | $I_{out}$ | A | AC 27 | AC 35 | AC 45 | AC 67 | AC 71 |
| Output frequency range[11)] | $f_{out}$ | Hz | 0 ... 1600 | | | | |

1) 2) 3) Housing dimension

4) 5) 6) See fig. "Air intake and air outlet at device"

7) Comply with supply voltage for motor holding brake; the following power supply unit has to be used in the scope of CSA/UL: ● UL508-certified ● output voltage: DC 24V ● output current: ≤ 31 A; for power supply units with output current > 31 A: install fuses in accordance with UL248

8) See information on "Rated power consumption control voltage input at $U_{N3}$"

9) Mains input L1, L2, L3; For use on a solidly grounded wye source only.

10) Copper wire; PVC-insulation (conductor temperature 75 °C; Ta ≤ 40 °C) in accordance with NFPA 79 chapter 12 and UL 508A chapter 28

11) Depending on switching frequency which was set in parameter P-0-0001

Table 26: UL ratings and dimensions (XMS*-W0150 ... 0375)

| Description | Symbol | Unit | XMS*-W0150 | XMS*-W0180 | XMS*-W0210 | XMS*-W0250 | XMS*-W0280 | XMS*-W0330 | XMS*-W0375 |
|---|---|---|---|---|---|---|---|---|---|
| Listing according to UL standard | | | UL 61800-5-1 | | | | | | |
| Listing according to CSA standard | | | C22.2 No. 274-17 | | | | | | |
| UL files | | | E328841 | | E134201 | | | E328841 | |
| Pollution degree | | | 2 | | | | | | |
| Ambient temperature range with nominal data | $T_{amax}$ | °C | 40 | | | | | | |
| Mass | m | kg | 11 | | 18.9 | | | | |
| Device height[1)] | H | mm | 340.5 | | | | | | |
| Device depth[2)] | T | mm | 196.5 | | | | | | |
| Device width[3)] | B | mm | 150 | | 250 | | | | |
| Minimum distance on the top of the device[4)] | $d_{top}$ | mm | 80 | | | | | | |
| Minimum distance on the bottom of the device[5)] | $d_{bot}$ | mm | 80 | | | | | | |
| Horizontal spacing at the device[6)] | $d_{hor}$ | mm | ● **0**<br>For devices of the ctrlX DRIVE product range in the DC bus group (central supply)<br>● **1.5**<br>For devices of the ctrlX DRIVE product range outside of the DC bus group (individual supply)<br>● **10**<br>For everything else | | | | | | |
| Rated control voltage input[7)] | $U_{N3}$ | V | 24 | | | | | | |
| Rated control current input[8)] | $I_{N3}$ | A | 7.5 | | 6.4 | | | 9.7 | |
| Short circuit current rating | SCCR | A rms | 42000 | | | | | | |
| Rated input voltage, power[9)] | $U_{LN\_nenn}$ | V | DC 254 ... 750 | | | | | | |
| Rated input current | $I_{LN}$ | A | DC 83 | DC 94.2 | DC 153 | DC 161 | DC 180 | DC 147 | |
| Field wiring material (material; conductor temperature; class) | | | Cu; 60/75 °C; 1 | | | | | | |
| Output voltage | $U_{out}$ | V | AC 0 ... 500 | | | | | | |
| Output current | $I_{out}$ | A | AC 100 | AC 120 | AC 140 | AC 147 | AC 165 | AC 194 | AC 221 |
| Output frequency range[11)] | $f_{out}$ | Hz | 0 ... 1600 | | | | | | |

1) 2) 3) Housing dimension

4) 5) 6) See fig. "Air intake and air outlet at device"

7) Comply with supply voltage for motor holding brake; the following power supply unit has to be used in the scope of CSA/UL: ● UL508-certified ● output voltage: DC 24V ● output current: ≤ 31 A; for power supply units with output current > 31 A: install fuses in accordance with UL248

8) See information on "Rated power consumption control voltage input at $U_{N3}$"

9) Mains input L1, L2, L3; For use on a solidly grounded wye source only.

10) Copper wire; PVC-insulation (conductor temperature 75 °C; Ta ≤ 40 °C) in accordance with NFPA 79 chapter 12 and UL 508A chapter 28

11) Depending on switching frequency which was set in parameter P-0-0001

**Rated power consumption control voltage input at $U_{N3}$**
Plus motor holding brake and control section, plus safety option

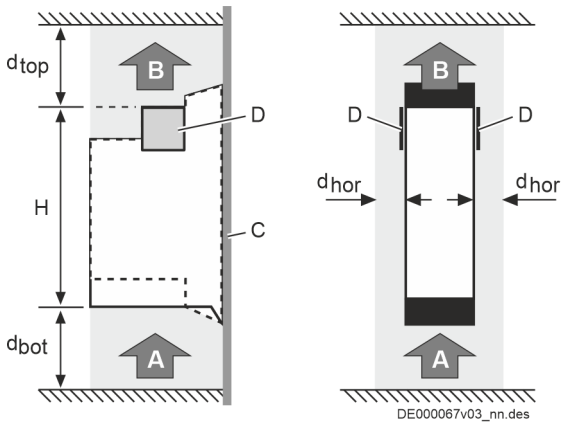


Fig. 17: Air intake and air outlet at device

A Air intake
B Air outlet
C Mounting surface in the control cabinet
D Touch guard plate at device (thickness: 1.5 mm = $d_{hor}$ for individual supply); thus, with two individually supplied devices mounted side by side there is no distance (0 mm) between the touch guard plates, and below the touch guard plates there is a distance of 3 mm (2 × 1.5 mm)
H Device height
$d_{top}$ Distance top
$d_{bot}$ Distance bottom
$d_{hor}$ Distance horizontal

### XMS*-C...

Table 27: UL ratings and dimensions (XMS*-C0210 ... 0280)

| Description | Symbol | Unit | XMS*-C0210 | XMS*-C0250 | XMS*-C0280 |
|---|---|---|---|---|---|
| Listing according to UL standard | | | UL 61800-5-1 | | |
| Listing according to CSA standard | | | C22.2 No. 274-17 | | |
| UL files | | | E134201 | | |
| Pollution degree | | | 2 | | |
| Ambient temperature range with nominal data | $T_{amax}$ | °C | 40 | | |
| Mass | m | kg | 15 | | |
| Device height[1)] | H | mm | 340.5 | | |
| Device depth[2)] | T | mm | 196.5 | | |
| Device width[3)] | B | mm | 250 | | |
| Minimum distance on the top of the device[4)] | $d_{top}$ | mm | 80 | | |
| Minimum distance on the bottom of the device[5)] | $d_{bot}$ | mm | 80 | | |
| Horizontal spacing at the device[6)] | $d_{hor}$ | mm | ● **0**<br>For devices of the ctrlX DRIVE product range in the DC bus group (central supply)<br>● **1.5**<br>For devices of the ctrlX DRIVE product range outside of the DC bus group (individual supply)<br>● **10**<br>For everything else | | |
| Rated control voltage input[7)] | $U_{N3}$ | V | 24 | | |
| Rated control current input[8)] | $I_{N3}$ | A | 6.4 | | |
| Short circuit current rating | SCCR | A rms | 42000 | | |
| Rated input voltage, power[9)] | $U_{LN\_nenn}$ | V | DC 254 ... 750 | | |
| Rated input current | $I_{LN}$ | A | 153 | 161 | 180 |
| Field wiring material (material; conductor temperature; class) | | | Cu; 60/75 °C; 1 | | |
| Output voltage | $U_{out}$ | V | AC 0 ... 500 | | |
| Output current | $I_{out}$ | A | AC 140 | AC 147 | AC 165 |
| Output frequency range[11)] | $f_{out}$ | Hz | 0 ... 1600 | | |

1) 2) 3) Housing dimension

4) 5) 6) See fig. "Distances at the device"

7) Comply with supply voltage for motor holding brake; the following power supply unit has to be used in the scope of CSA/UL: ● UL508-certified ● output voltage: DC 24V ● output current: ≤ 31 A; for power supply units with output current > 31 A: install fuses in accordance with UL248

8) See information on "Rated power consumption control voltage input at $U_{N3}$"

9) Mains input L1, L2, L3; For use on a solidly grounded wye source only.

10) Copper wire; PVC-insulation (conductor temperature 75 °C; Ta ≤ 40 °C) in accordance with NFPA 79 chapter 12 and UL 508A chapter 28

11) Depending on switching frequency which was set in parameter P-0-0001

**Rated power consumption control voltage input at $U_{N3}$**
Plus motor holding brake and control section, plus safety option

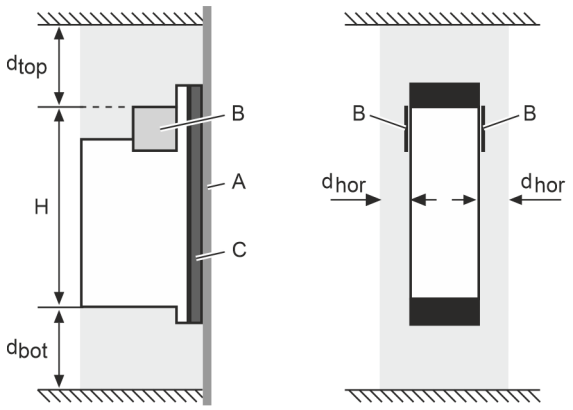


Fig. 18: Distances at the device

A Mounting surface in the control cabinet
B Touch guard plate at device (thickness: 1.5 mm = $d_{hor}$ for individual supply); thus, with two individually supplied devices mounted side by side there is no distance (0 mm) between the touch guard plates, and below the touch guard plates there is a distance of 3 mm (2 × 1.5 mm)
C Coldplate
H Device height
$d_{top}$ Distance top
$d_{bot}$ Distance bottom
$d_{hor}$ Distance horizontal

### 7.1.4 XMD

Table 28: UL ratings and dimensions (XMD)

| Description | Symbol | Unit | XMD*-W0606 | XMD*-W1010 | XMD*-W1616 | XMD*-W2323 | XMD*-W3030 | XMD*-W3636 | XMD*-W5454 | XMD*-W7070 |
|---|---|---|---|---|---|---|---|---|---|---|
| Listing according to UL standard | | | UL 61800-5-1 | | | | tbd | | UL 61800-5-1 | |
| Listing according to CSA standard | | | C22.2 No. 274-17 | | | | tbd | | C22.2 No. 274-17 | |
| UL files | | | E134201 | | | | tbd | | E134201 | |
| Pollution degree | | | 2 | | | | | | | |
| Ambient temperature range with nominal data | $T_{amax}$ | °C | 40 | | | | | | | |
| Mass | m | kg | 3.3 | | | | 4.2 | | 6.7 | |
| Device height[1)] | H | mm | 309 | | | | | | | |
| Device depth[2)] | T | mm | 196.5 | | | | | | | |
| Device width[3)] | B | mm | 50 | | | | 75 | | 150 | |
| Minimum distance on the top of the device[4)] | $d_{top}$ | mm | 80 | | | | | | | |
| Minimum distance on the bottom of the device[5)] | $d_{bot}$ | mm | 80 | | | | | | | |
| Horizontal spacing at the device[6)] | $d_{hor}$ | mm | • **0**<br>For devices of the ctrlX DRIVE product range in the DC bus group (central supply)<br>• **1.5**<br>For devices of the ctrlX DRIVE product range outside of the DC bus group (individual supply)<br>• **10**<br>For everything else | | | | | | | |
| Rated control voltage input[7)] | $U_{N3}$ | V | 24 | | | | | | | |
| Rated control current input[8)] | $I_{N3}$ | A | 5.3 | | | | tbd | | 6.7 | |
| Short circuit current rating | SCCR | A rms | 42000 | | | | tbd | | 42000 | |
| Rated input voltage, power[9)] | $U_{LN\_nenn}$ | V | DC 254 ... 750 | | | | | | | |
| Rated input current | $I_{LN}$ | A | DC 4.9 | DC 8.1 | DC 12.9 | DC 18.8 | tbd | tbd | DC 47.6 | DC 61.7 |
| Field wiring material (material; conductor temperature; class) | | | Cu; 75 °C; 1 | | | | | | | |
| Output voltage | $U_{out}$ | V | AC 0 ... 500 | | | | | | | |
| Output current | $I_{out}$ | A | Axis 1: AC 2<br>Axis 2: AC 2 | Axis 1: AC 3.3<br>Axis 2: AC 3.3 | Axis 1: AC 5.3<br>Axis 2: AC 5.3 | Axis 1: AC 7.7<br>Axis 2: AC 7.7 | Axis 1: AC 12<br>Axis 2: AC 12 | Axis 1: AC 18<br>Axis 2: AC 18 | Axis 1: AC 27<br>Axis 2: AC 27 | Axis 1: AC 35<br>Axis 2: AC 35 |
| Output frequency range[10)] | $f_{out}$ | Hz | 0 ... 800 | | | | | | 0 ... 1600 | |

1) 2) 3) Housing dimension

4) 5) 6) See fig. "Air intake and air outlet at device"

7) Comply with supply voltage for motor holding brake; the following power supply unit has to be used in the scope of CSA/UL: ● UL508-certified ● output voltage: DC 24V ● output current: ≤ 31 A; for power supply units with output current > 31 A: install fuses in accordance with UL248

8) See information on "Rated power consumption control voltage input at $U_{N3}$"

9) Mains input L1, L2, L3; For use on a solidly grounded wye source only.

10) Depending on switching frequency which was set in parameter P-0-0001

**Rated power consumption control voltage input at $U_{N3}$**

Plus motor holding brake and control section, plus safety option

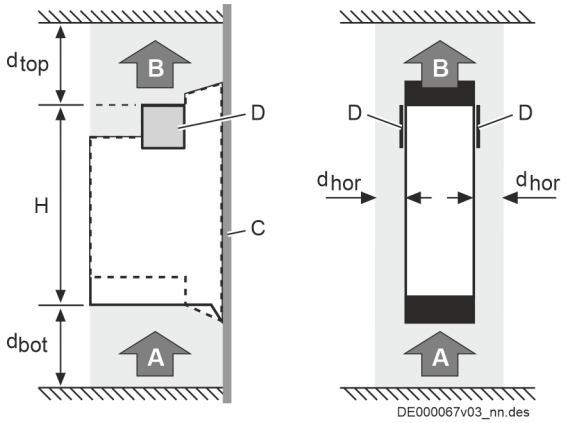


Fig. 19: Air intake and air outlet at device

A Air intake
B Air outlet
C Mounting surface in the control cabinet
D Touch guard plate at device (thickness: 1.5 mm = $d_{hor}$ for individual supply); thus, with two individually supplied devices mounted side by side there is no distance (0 mm) between the touch guard plates, and below the touch guard plates there is a distance of 3 mm (2 × 1.5 mm)
H Device height
$d_{top}$ Distance top
$d_{bot}$ Distance bottom
$d_{hor}$ Distance horizontal

### 7.1.5 XMQ

Table 29: UL ratings and dimensions (XMQ)

| Designation | Symbol | Unit | XMQ*-WQ001 | XMQ*-WQ002 |
|---|---|---|---|---|
| Listing according to UL standard | | | UL 61800-5-1 | |
| Listing according to CSA standard | | | C22.2 No. 274-17 | |
| UL files | | | E134201 | |
| Pollution degree | | | 2 | |
| Ambient temperature range with nominal data | $T_{amax}$ | °C | 40 | |
| Mass | m | kg | 10 | 15 |
| Device height[1)] | H | mm | 309 | |
| Device depth[2)] | T | mm | 196.5 | |
| Device width[3)] | B | mm | 200 | 325 |
| Minimum distance on the top of the device[4)] | $d_{top}$ | mm | 80 | |
| Minimum distance on the bottom of the device[5)] | $d_{bot}$ | mm | 80 | |
| Horizontal spacing at the device[6)] | $d_{hor}$ | mm | ● **0**<br>For devices of the ctrlX DRIVE product range in the DC bus group (central supply)<br>● **1.5**<br>For devices of the ctrlX DRIVE product range outside of the DC bus group (individual supply)<br>● **10**<br>For everything else | |
| Rated control voltage input[7)] | $U_{N3}$ | V | 24 | |
| Rated control current input[8)] | $I_{N3}$ | A | 12 | 14.3 |
| Short circuit current rating | SCCR | A rms | 42000 | |
| Rated input voltage, power[9)] | $U_{LN\_nenn}$ | V | DC 254 ... 750 | |
| Rated input current | $I_{LN}$ | A | DC 64 | DC 162 |
| Required wire size in accordance with NFPA 79 and UL 508 A (internal wiring);[10)] | $A_{LN}$ | AWG | Axis 1: 8<br>Axis 2: 10<br>Axis 3: 14<br>Axis 4: 14 | Axis 1: 4<br>Axis 2: 8<br>Axis 3: 10<br>Axis 4: 14 |
| Field wiring material (material; conductor temperature; class) | | | Cu; 75 °C; 1 | |
| Output voltage | $U_{out}$ | V | AC 0 ... 500 | |
| Output current | $I_{out}$ | A | Axis 1: AC 27<br>Axis 2: AC 18<br>Axis 3: AC 6.7<br>Axis 4: AC 3.3 | Axis 1: AC 67<br>Axis 2: AC 35<br>Axis 3: AC 18<br>Axis 4: AC 3.3 |
| Output frequency range[11)] | $f_{out}$ | Hz | 0 ... 1600 | |

1) 2) 3) Housing dimension

4) 5) 6) See fig. "Air intake and air outlet at device"

7) Comply with supply voltage for motor holding brake; the following power supply unit has to be used in the scope of CSA/UL: ● UL508-certified ● output voltage: DC 24V ● output current: ≤ 31 A; for power supply units with output current > 31 A: install fuses in accordance with UL248

8) See information on "Rated power consumption control voltage input at $U_{N3}$"

9) Mains input L1, L2, L3; For use on a solidly grounded wye source only.

10) Copper wire; PVC-insulation (conductor temperature 75 °C; Ta ≤ 40 °C) in accordance with NFPA 79 chapter 12 and UL 508A chapter 28

11) Depending on switching frequency which was set in parameter P-0-0001

**Rated power consumption control voltage input at $U_{N3}$**

Plus motor holding brake and control section, plus safety option

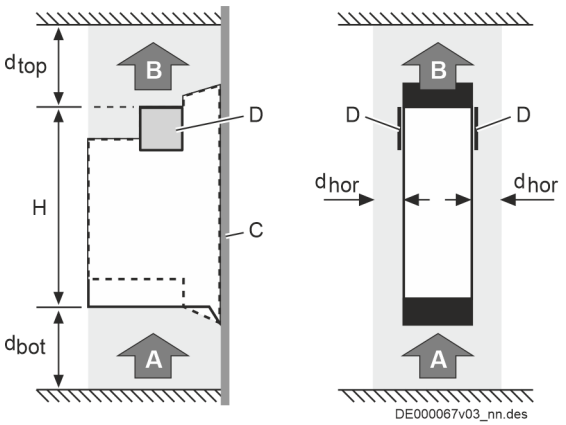


Fig. 20: Air intake and air outlet at device

A Air intake
B Air outlet
C Mounting surface in the control cabinet
D Touch guard plate at device (thickness: 1.5 mm = $d_{hor}$ for individual supply); thus, with two individually supplied devices mounted side by side there is no distance (0 mm) between the touch guard plates, and below the touch guard plates there is a distance of 3 mm (2 × 1.5 mm)
H Device height
$d_{top}$ Distance top
$d_{bot}$ Distance bottom
$d_{hor}$ Distance horizontal

## 7.2 Supply units

### 7.2.1 XVR

Table 30: UL ratings and dimensions (XVR)

| Description | Symbol | Unit | XVR*-W0019 | XVR*-W0048 | XVR*-W0072 | XVR*-W0100 |
|---|---|---|---|---|---|---|
| Listing according to UL standard | | | tbd | UL 61800-5-1 | | |
| Listing according to CSA standard | | | tbd | C22.2 No. 274-17 | | |
| UL files | | | tbd | E328841 | | |
| Pollution degree | | | 2 | | | |
| Ambient temperature range with nominal data | $T_{amax}$ | °C | 40 | | | |
| Mass | m | kg | 5.8 | 16 | 20 | 27 |
| Device height[1)] | H | mm | 309 | 340.5 | | |
| Device depth[2)] | T | mm | 196.5 | | | |
| Device width[3)] | B | mm | 100 | 225 | 250 | 350 |
| Minimum distance on the top of the device[4)] | $d_{top}$ | mm | 80 | | | |
| Minimum distance on the bottom of the device[5)] | $d_{bot}$ | mm | 80 | | | |
| Horizontal spacing at the device[6)] | $d_{hor}$ | mm | ● **0**<br>For devices of the ctrlX DRIVE product range in the DC bus group (central supply)<br>● **1.5**<br>For devices of the ctrlX DRIVE product range outside of the DC bus group (individual supply)<br>● **10**<br>For everything else | | | |
| Rated control voltage input[7)] | $U_{N3}$ | V | 24 | | | |
| Rated control current input | $I_{N3}$ | A | 3.3 | 3.8 | 4.1 | 9.5 |
| Short circuit current rating | SCCR | A rms | tbd | 42000 | | |
| Rated input voltage, power[8)] | $U_{LN\_nenn}$ | V | 3 × AC 380Y/220V ... 500Y/289V | | | |
| Mains frequency | $f_{LN}$ | Hz | 50 ... 60 | | | |
| Rated input current | $I_{LN}$ | A | 29.5 | 76 | 109 | 150 |
| Branch circuit protection fuse[9)] | | | Class J Fuse 50A | Class J Fuse 100A | Class J Fuse 125A | Class J Fuse 200A |
| Required wire size in accordance with UL 508 A (internal wiring);[10)] | $A_{LN}$ | AWG | 8 | 3 | 1/0 | 3/0 |
| Field wiring material (material; conductor temperature; class) | | | Cu; 75 °C; 1 | | | |
| Output voltage | $U_{out}$ | V | DC 0 ... 750 | | | |
| Output current | $I_{out}$ | A | DC 25.3 | DC 64 | DC 96 | DC 133 |
| Maximum allowed DC bus power ($U_{LN\ AC\ 400V}$) | $P_{out}$ | kW | 57.4 | 120 | 180 | 250 |

1) 2) 3) Housing dimension

4) 5) 6) See fig. "Air intake and air outlet at device"

7) Comply with supply voltage for motor holding brake; the following power supply unit has to be used in the scope of CSA/UL: ● UL508-certified ● output voltage: DC 24V ● output current: ≤ 31 A; for power supply units with output current > 31 A: install fuses in accordance with UL248

8) Mains input L1, L2, L3; For use on a solidly grounded wye source only.

9) Use cUL-listed fuses. Suitable for use on a circuit capable of delivering not more than 42000 rms symmetrical amperes, 500 Volts maximum. If using inverse-time circuit breakers (in this case, you are obligated to prove opposite UL that an appropriate circuit breaker was used) or type E combination motor controllers instead of recommended fuses, see UL 61800-5-1, section 5.2.3.6.2DV.4.1.3.

10) Copper wire; PVC-insulation (conductor temperature 75 °C; Ta ≤ 40 °C) in accordance with NFPA 79 chapter 12 and UL 508A chapter 28

11) Depending on switching frequency which was set in parameter P-0-0001

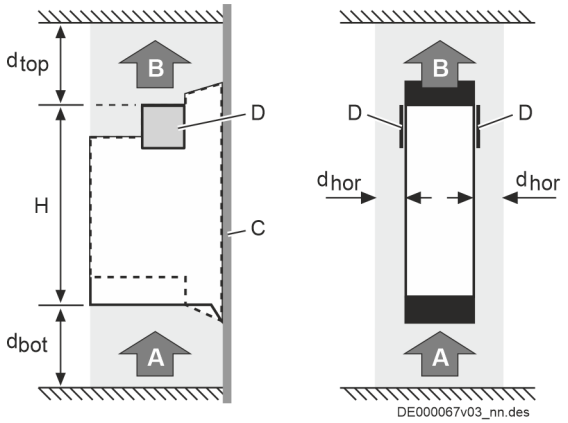


Fig. 21: Air intake and air outlet at device

A Air intake
B Air outlet
C Mounting surface in the control cabinet
D Touch guard plate at device (thickness: 1.5 mm = $d_{hor}$ for individual supply); thus, with two individually supplied devices mounted side by side there is no distance (0 mm) between the touch guard plates, and below the touch guard plates there is a distance of 3 mm (2 × 1.5 mm)
H Device height
$d_{top}$ Distance top
$d_{bot}$ Distance bottom
$d_{hor}$ Distance horizontal

Table 31: Assignment supply unit ↔ mains connection module

| Supply unit | XVR*-W0019 | XVR*-W0048 | XVR*-W0072 | XVR*-W0100 |
|---|---|---|---|---|
| Mains connection module | XLI1-1R-W0019 | XLI1-1R-W0048 | XLI1-1R-W0072 | XLI1-1R-W0100 |

### 7.2.2 XVE

Table 32: UL ratings and dimensions (XVE)

| Description | Symbol | Unit | XVE*-W0030 | XVE*-W0075 | XVE*-W0125 |
|---|---|---|---|---|---|
| Listing according to UL standard | | | tbd | UL 61800-5-1 | |
| Listing according to CSA standard | | | tbd | C22.2 No. 274-17 | |
| UL files | | | tbd | E328841 | |
| Pollution degree | | | 2 | | |
| Ambient temperature range with nominal data | $T_{amax}$ | °C | 40 | | |
| Mass | m | kg | 6.2 | 16 | 34.5 |
| Device height[1)] | H | mm | 309 | 340.5 | |
| Device depth[2)] | T | mm | 196.5 | | |
| Device width[3)] | B | mm | 125 | 225 | 350 |
| Minimum distance on the top of the device[4)] | $d_{top}$ | mm | 80 | | |
| Minimum distance on the bottom of the device[5)] | $d_{bot}$ | mm | 80 | | |
| Horizontal spacing at the device[6)] | $d_{hor}$ | mm | ● **0**<br>For devices of the ctrlX DRIVE product range in the DC bus group (central supply)<br>● **1.5**<br>For devices of the ctrlX DRIVE product range outside of the DC bus group (individual supply)<br>● **10**<br>For everything else | | |
| Rated control voltage input[7)] | $U_{N3}$ | V | 24 | | |
| Rated control current input | $I_{N3}$ | A | 3 | 4.8 | 9.5 |
| Short circuit current rating | SCCR | A rms | tbd | 42000 | |
| Rated input voltage, power[8)] | $U_{LN\_nenn}$ | V | 3 × AC 200Y/115V ... 500Y/289V | | |
| Mains frequency | $f_{LN}$ | Hz | 50 ... 60 | | |
| Rated input current | $I_{LN}$ | A | 50.3 | 124 | 208 |
| Branch circuit protection fuse[9)] | | | Class J Fuse 63A | Class J Fuse 150A | Class J Fuse 250A |
| Required wire size in accordance with UL 508 A (internal wiring);[10)] | $A_{LN}$ | AWG | 6 | 2/0 | 2×2/0 |
| Field wiring material (material; conductor temperature; class) | | | Cu; 75 °C; 1 | | |
| Output voltage | $U_{out}$ | V | DC 280 ... 710 | | |
| Output current | $I_{out}$ | A | DC 55.6 | DC 144 | DC 232 |
| Maximum allowed DC bus power ($U_{LN\ AC\ 400V}$) | $P_{out}$ | kW | 70 | 112 | 210 |

1) 2) 3) Housing dimension

4) 5) 6) See fig. "Air intake and air outlet at device"

7) Comply with supply voltage for motor holding brake; the following power supply unit has to be used in the scope of CSA/UL: ● UL508-certified ● output voltage: DC 24V ● output current: ≤ 31 A; for power supply units with output current > 31 A: install fuses in accordance with UL248

8) Mains input L1, L2, L3; For use on a solidly grounded wye source only.

9) Use cUL-listed fuses. Suitable for use on a circuit capable of delivering not more than 42000 rms symmetrical amperes, 500 Volts maximum. If using inverse-time circuit breakers (in this case, you are obligated to prove opposite UL that an appropriate circuit breaker was used) or type E combination motor controllers instead of recommended fuses, see UL 61800-5-1, section 5.2.3.6.2DV.4.1.3.

10) Copper wire; PVC-insulation (conductor temperature 75 °C; Ta ≤ 40 °C) in accordance with NFPA 79 chapter 12 and UL 508A chapter 28

11) Depending on switching frequency which was set in parameter P-0-0001

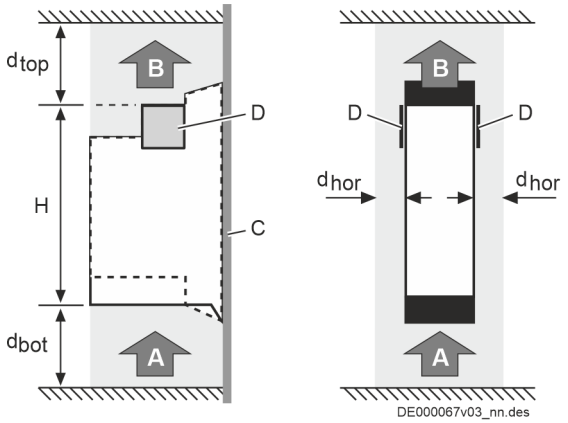


Fig. 22: Air intake and air outlet at device

A Air intake
B Air outlet
C Mounting surface in the control cabinet
D Touch guard plate at device (thickness: 1.5 mm = $d_{hor}$ for individual supply); thus, with two individually supplied devices mounted side by side there is no distance (0 mm) between the touch guard plates, and below the touch guard plates there is a distance of 3 mm (2 × 1.5 mm)
H Device height
$d_{top}$ Distance top
$d_{bot}$ Distance bottom
$d_{hor}$ Distance horizontal

## 7.3 China RoHS 2

➦ https://www.boschrexroth.com.cn/zh/cn/certificates/china-rohs2/

# 8 Standards

## 8.1 CE label

### 8.1.1 Overview

| CE | Standard | Declaration of conformity *) |
|---|---|---|
| Low Voltage Directive 2014/35/EU | EN 61800-5-1 | DCTC-30337-001 |
| EMC Directive 2014/30/EU | EN 61800-3 | DCTC-30337-002 |
| ErP Directive 2009/125/EC | EN 61800-9-2 | DCTC-30337-003 |
| Machinery Directive 2006/42/EC | EN ISO 13849-1<br>EN 62061<br>EN 61800-5-1<br>EN 61800-5-2<br>EN 61508-1 ... 7 | DCTC-30136-001<br>DCTC-30136-002<br>DCTC-30136-004 |
| RoHS Directive | 2011/65/EU | RoHS |
| *) Declaration of conformity in Bosch Rexroth media directory: ➡ www.boschrexroth.com/mediadirectory, search term e.g. "DCTC-30337-001" | | |

## 8.1.2 Declaration of conformity (Machinery Directive)

### SafeMotion

rexroth
A Bosch Company

**EG-Konformitätserklärung - *Original***
***EC declaration of conformity***

Dok.-Nr. / *Doc. No.*: DCTC-30136-004
Datum / *Date*: 2022-01-13

☒ nach Maschinenrichtlinie 2006/42/EG / *in accordance with Machinery Directive 2006/42/EC*
☐ nach Niederspannungsrichtlinie 2014/35/EU / *in accordance with Low Voltage Directive 2014/35/EU*
☐ nach EMV-Richtlinie 2014/30/EU / *in accordance with EMC Directive 2014/30/EU*
☐ nach Druckgeräte-Richtlinie 2014/68/EU / *in accordance with Pressure Equipment Directive 2014/68/EU*
☐ nach ATEX-Richtlinie 2014/34/EU / *in accordance with ATEX Directive 2014/34/EU*

© Bosch Rexroth AG 2022

Hiermit erklärt der Hersteller / *The manufacturer hereby declares*
Bosch Rexroth AG, Bürgermeister-Dr.-Nebel-Str. 2, 97816 Lohr a.Main / Germany

dass die nachstehenden Produkte / *that the products below*

Bezeichnung / *Name:* Sicherheitstechnik-Optionsmodul M5 (SafeMotion) für das elektrische Antriebssystem „ctrlX DRIVEplus", zweite Generation / *Optional safety function module M5 (SafeMotion) for the electric drive system „ctrlX DRIVEplus", second generation*

Typen / *Types* XCS2-**-02***M5****-* XMS2-**-02***M5****-*
XCD2-**-02***M5****-* XMD2-**-02***M5****-*

Handelsbezeichnung / *Trade name:* Rexroth

ab Herstelldatum / *from the date of manufacture:* 2022-01-13

DCTC-30136-004_KOE_N_D0_2022-01-13.docx

in Übereinstimmung mit der oben genannten Richtlinie entwickelt, konstruiert und gefertigt wurde. / *was developed, designed and manufactured in compliance with the above-mentioned directive.*
Die alleinige Verantwortung für die Ausstellung dieser Konformitätserklärung trägt der Hersteller. / *This declaration of conformity is issued under the sole responsibility of the manufacturer.*

Angewandte harmonisierte Normen / *Harmonized Standards applied:*

| **Norm / *Standard*** | **Titel / *Title*** | **Ausgabe / *Edition*** |
|---|---|---|
| EN ISO 13849-1 *(ISO 13849-1)* | Sicherheit von Maschinen – Sicherheitsbezogene Teile von Steuerungen – Teil 1: Allgemeine Gestaltungsleitsätze / *Safety of machinery – Safety-related parts of control systems – Part 1: General principles for design* | 2015 *(2015)* |
| EN 62061 *(IEC 62061)* | Sicherheit von Maschinen – Funktionale Sicherheit sicherheitsbezogener elektrischer, elektronischer und programmierbarer elektronischer Steuerungssysteme / *Safety of machinery – Functional safety of safety-related electrical, electronic and programmable electronic control systems* | 2005 + Cor.:2010 + A1: 2013 + A2:2015 *(2005 + A1:2012 + A2:2015)* |
| EN 61800-5-2 *(IEC 61800-5-2)* | Elektrische Leistungsantriebssysteme mit einstellbarer Drehzahl – Teil 5-2: Anforderungen an die Sicherheit – Funktionale Sicherheit / *Adjustable speed electrical power drive systems – Part 5-2: Safety requirements - Functional* | 2007 *(2007)* |

Seite *Page* 1 / 2

**EG-Konformitätserklärung** – *Original*
**EC declaration of conformity**

Seite *Page* 2 / 2
**DCTC 30136-004**: 2022-01-13

Sonstige angewandte technische Normen / *Other technical standards applied:*

| **Norm / *Standard*** | **Titel / *Title*** | **Ausgabe / *Edition*** |
|---|---|---|
| EN 61508-1 bis -7<br>(IEC 61508-1 bis -7 | Funktionale Sicherheit sicherheitsbezogener elektrischer/elektronischer/programmierbarer elektronischer Systeme /<br>*Functional safety of electrical/electronic/programmable electronic safety-related systems* | 2010<br>*(2010)* |
| EN 61800-5-1<br>*(IEC 61800-5-1)* | Elektrische Leistungsantriebssysteme mit einstellbarer Drehzahl – Teil 5-1: Anforderungen an die Sicherheit – Elektrische, thermische und energetische Anforderungen /<br>*Adjustable speed electrical power drive systems – Part 5-1: Safety requirements – Electrical, thermal and energy* | 2007+A1:2017<br>*(2007+A1:2016)* |
| EN 61800-5-2<br>*(IEC 61800-5-2)* | Elektrische Leistungsantriebssysteme mit einstellbarer Drehzahl – Teil 5-2: Anforderungen an die Sicherheit – Funktionale Sicherheit /<br>*Adjustable speed electrical power drive systems – Part 5-2: Safety requirements - Functional* | 2017<br>*(2016)* |

Benannte Stelle, die das EG-Baumusterprüfverfahren nach oben genannter Richtlinie durchgeführt hat /
*Notified body that has conducted the EC type-examination procedure in accordance with the above-mentioned directive*
Name, address, identification number: TÜV Rheinland Industrie Service GmbH, Am Grauen Stein, 51105 Köln / Germany, 0035
No. of EC type-examination certificate: 01/205/5862.00/21

Nachfolgende Person ist bevollmächtigt, die relevanten technischen Unterlagen zusammenstellen /
*The individual below is authorized to compile the relevant technical files:*
Name, Anschrift: Christian Russo, DC-AE/EPI3, Bürgermeister-Dr.-Nebel-Str. 2, 97816 Lohr a.Main / Germany

Weitere Erläuterungen / *Further explanations:*
Das Sicherheitstechnik-Optionsmodul M5 ist entsprechend SIL 3 nach EN 61800-5-2 / EN 61508, SIL CL 3 nach EN 62061 und Kategorie 4 / PL e nach EN ISO 13849-1 ausgeführt. /
*The optional safety function module M5 fulfils the requirements of SIL 3 according to EN 61800-5-2 / EN 61508, SIL CL 3 according to EN 62061 and Category 4 / PL e according to EN ISO 13489-1.*

| Lohr a.Main , | 2022-01-13 | ppa. | i.V. |
|---|---|---|---|
| Ort / *place* | Datum / *date* | Uwe Czychy<br>Werksleitung LoP2 /<br>*Plant Manager LoP2* | Ralf Brod<br>Product Owner Drives DC-AE/PJ-DPL |

Änderungen im Inhalt der EG-Konformitätserklärung sind vorbehalten. Derzeit gültige Ausgabe auf Anfrage.
*We reserve the right to make changes to the content of the EC Declaration of Conformity. Current issue on request.*

## Safe Torque Off (XC*1-*..., XM*1-*...)

rexroth
A Bosch Company

**EG-Konformitätserklärung** - *Original*
***EC declaration of conformity***

Dok.-Nr. / *Doc. No.*: DCTC-30136-001
Datum / *Date*: 2020-07-15

- ☒ nach Maschinenrichtlinie 2006/42/EG / *in accordance with Machinery Directive 2006/42/EC*
- ☐ nach Niederspannungsrichtlinie 2014/35/EU / *in accordance with Low Voltage Directive 2014/35/EU*
- ☐ nach EMV-Richtlinie 2014/30/EU / *in accordance with EMC Directive 2014/30/EU*
- ☐ nach Druckgeräte-Richtlinie 2014/68/EU / *in accordance with Pressure Equipment Directive 2014/68/EU*
- ☐ nach ATEX-Richtlinie 2014/34/EU / *in accordance with ATEX Directive 2014/34/EU*

© Bosch Rexroth AG 2021

Hiermit erklärt der Hersteller / *The manufacturer hereby declares*
Bosch Rexroth AG, Bürgermeister-Dr.-Nebel-Str. 2, 97816 Lohr a.Main / Germany

dass die nachstehenden Produkte / *that the products below*

| | |
|---|---|
| Bezeichnung / *Name:* | Sicherheitstechnik-Optionsmodul T0 (Safe-Torque-Off) für das elektrische Antriebssystem „ctrlX DRIVE“ und „ctrlX DRIVEplus / *Optional safety function module T0 (Safe Torque Off) for the electric drive system "ctrlX DRIVE" and "ctrlX DRIVEplus"* |
| Typen / *Types* | XC*1-*... XM*1-*... |
| Handelsbezeichnung / *Trade name:* | Rexroth |
| ab Herstelldatum / *from the date of manufacture:* | 2020-07-15 |

DCTC-30136-001_KOE_N_D0_2020-07-15.docx

in Übereinstimmung mit der oben genannten Richtlinie entwickelt, konstruiert und gefertigt wurde. / *was developed, designed and manufactured in compliance with the above-mentioned directive.*
Die alleinige Verantwortung für die Ausstellung dieser Konformitätserklärung trägt der Hersteller. / *This declaration of conformity is issued under the sole responsibility of the manufacturer.*

Angewandte harmonisierte Normen / *Harmonized Standards applied:*

| **Norm / *Standard*** | **Titel / *Title*** | **Ausgabe / *Edition*** |
|---|---|---|
| EN ISO 13849-1 *(ISO 13849-1)* | Sicherheit von Maschinen – Sicherheitsbezogene Teile von Steuerungen – Teil 1: Allgemeine Gestaltungsleitsätze / *Safety of machinery – Safety-related parts of control systems – Part 1: General principles for design* | 2015 *(2015)* |
| EN 62061 *(IEC 62061)* | Sicherheit von Maschinen – Funktionale Sicherheit sicherheitsbezogener elektrischer, elektronischer und programmierbarer elektronischer Steuerungssysteme / *Safety of machinery – Functional safety of safety-related electrical, electronic and programmable electronic control systems* | 2005 + Cor.:2010 + A1: 2013 + A2:2015 *(2005 + A1:2012 + A2:2015)* |
| EN 61800-5-2 *(IEC 61800-5-2)* | Elektrische Leistungsantriebssysteme mit einstellbarer Drehzahl – Teil 5-2: Anforderungen an die Sicherheit – Funktionale Sicherheit / *Adjustable speed electrical power drive systems – Part 5-2: Safety requirements - Functional* | 2007 *(2007)* |

Seite *Page* 1 / 2

**EG-Konformitätserklärung –** *Original*
**EC declaration of conformity**

Seite *Page* 2 / 2
**DCTC 30136-001:** 2020-07-15

Sonstige angewandte technische Normen / *Other technical standards applied:*

| **Norm / *Standard*** | **Titel / *Title*** | **Ausgabe / *Edition*** |
|---|---|---|
| EN 61508-1 bis -7<br>(IEC 61508-1 bis -7 | Funktionale Sicherheit sicherheitsbezogener elektrischer/elektronischer/programmierbarer elektronischer Systeme /<br>*Functional safety of electrical/electronic/programmable electronic safety-related systems* | 2010<br>*(2010)* |
| EN 61800-5-1<br>*(IEC 61800-5-1)* | Elektrische Leistungsantriebssysteme mit einstellbarer Drehzahl – Teil 5-1: Anforderungen an die Sicherheit – Elektrische, thermische und energetische Anforderungen /<br>*Adjustable speed electrical power drive systems – Part 5-1: Safety requirements – Electrical, thermal and energy* | 2007+A1:2017<br>*(2007+A1:2016)* |
| EN 61800-5-2<br>*(IEC 61800-5-2)* | Elektrische Leistungsantriebssysteme mit einstellbarer Drehzahl – Teil 5-2: Anforderungen an die Sicherheit – Funktionale Sicherheit /<br>*Adjustable speed electrical power drive systems – Part 5-2: Safety requirements - Functional* | 2017<br>*(2016)* |

Benannte Stelle, die das EG-Baumusterprüfverfahren nach oben genannter Richtlinie durchgeführt hat /
*Notified body that has conducted the EC type-examination procedure in accordance with the above-mentioned directive*
Name, address, identification number: TÜV Rheinland Industrie Service GmbH, Am Grauen Stein, 51105 Köln / Germany, 0035
No. of EC type-examination certificate: 01/205/5652.01/20

Nachfolgende Person ist bevollmächtigt, die relevanten technischen Unterlagen zusammenstellen /
*The individual below is authorized to compile the relevant technical files:*
Name, Anschrift: Christian Russo, DC-AE/EPI3, Bürgermeister-Dr.-Nebel-Str. 2, 97816 Lohr a.Main / Germany

Weitere Erläuterungen / *Further explanations:*
Das Sicherheitstechnik-Optionsmodul T0 ist entsprechend SIL 3 nach EN 61800-5-2 / EN 61508, SIL CL 3 nach EN 62061 und Kategorie 4 / PL e nach EN ISO 13849-1 ausgeführt./
*The optional safety function module T0 fulfils the requirements of SIL 3 according to EN 61800-5-2 / EN 61508, SIL CL 3 according to EN 62061 and Category 4 / PL e according to EN ISO 13489-1.*

| Lohr a.Main , | 2020-07-15 | ppa. | i.V. |
|---|---|---|---|
| Ort / *place* | Datum / *date* | Uwe Czycho<br>Werksleitung LoP2 /<br>*Plant Manager LoP2* | Ralf Brod<br>Product Owner Drives DC-AE/PJ-DPL |

Änderungen im Inhalt der EG-Konformitätserklärung sind vorbehalten. Derzeit gültige Ausgabe auf Anfrage.
*We reserve the right to make changes to the content of the EC Declaration of Conformity. Current issue on request.*

## Safe Torque Off (XC*2-*..., XM*2-*...)

rexroth
A Bosch Company

**EG-Konformitätserklärung - *Original***
***EC declaration of conformity***

Dok.-Nr. / *Doc. No.*: DCTC-30136-002
Datum / *Date*: 2021-08-27

- ☒ nach Maschinenrichtlinie 2006/42/EG / *in accordance with Machinery Directive 2006/42/EC*
- ☐ nach Niederspannungsrichtlinie 2014/35/EU / *in accordance with Low Voltage Directive 2014/35/EU*
- ☐ nach EMV-Richtlinie 2014/30/EU / *in accordance with EMC Directive 2014/30/EU*
- ☐ nach Druckgeräte-Richtlinie 2014/68/EU / *in accordance with Pressure Equipment Directive 2014/68/EU*
- ☐ nach ATEX-Richtlinie 2014/34/EU / *in accordance with ATEX Directive 2014/34/EU*

© Bosch Rexroth AG 2021

Hiermit erklärt der Hersteller / *The manufacturer hereby declares*
Bosch Rexroth AG, Bürgermeister-Dr.-Nebel-Str. 2, 97816 Lohr a.Main / Germany

dass die nachstehenden Produkte / *that the products below*

| | |
|---|---|
| Bezeichnung / *Name:* | Sicherheitstechnik-Optionsmodule T0 (Safe-Torque-Off) für das elektrische Antriebssystem „ctrlX DRIVE" und „ctrlX DRIVEplus", zweite Generation / *Optional safety function module T0 (Safe Torque Off) for the electric drive system "ctrlX DRIVE" and "ctrlX DRIVEplus", second generation* |
| Typen / *Types* | XC*2-*... XM*2-*... |
| Handelsbezeichnung / *Trade name:* | Rexroth |
| ab Herstelldatum / *from the date of manufacture:* | 2021-08-27 |

DCTC-30136-002_KOE_N_D0_2021-08-27.docx

in Übereinstimmung mit der oben genannten Richtlinie entwickelt, konstruiert und gefertigt wurde. / *was developed, designed and manufactured in compliance with the above-mentioned directive.*
Die alleinige Verantwortung für die Ausstellung dieser Konformitätserklärung trägt der Hersteller. / *This declaration of conformity is issued under the sole responsibility of the manufacturer.*

Angewandte harmonisierte Normen / *Harmonized Standards applied:*

| Norm / *Standard* | Titel / *Title* | Ausgabe / *Edition* |
|---|---|---|
| EN ISO 13849-1 *(ISO 13849-1)* | Sicherheit von Maschinen – Sicherheitsbezogene Teile von Steuerungen – Teil 1: Allgemeine Gestaltungsleitsätze / *Safety of machinery – Safety-related parts of control systems – Part 1: General principles for design* | 2015 *(2015)* |
| EN 62061 *(IEC 62061)* | Sicherheit von Maschinen – Funktionale Sicherheit sicherheitsbezogener elektrischer, elektronischer und programmierbarer elektronischer Steuerungssysteme / *Safety of machinery – Functional safety of safety-related electrical, electronic and programmable electronic control systems* | 2005 + Cor.:2010 + A1: 2013 + A2:2015 *(2005 + A1:2012 + A2:2015)* |
| EN 61800-5-2 *(IEC 61800-5-2)* | Elektrische Leistungsantriebssysteme mit einstellbarer Drehzahl – Teil 5-2: Anforderungen an die Sicherheit – Funktionale Sicherheit / *Adjustable speed electrical power drive systems – Part 5-2: Safety requirements - Functional* | 2007 *(2007)* |

Seite *Page* 1 / 2

**EG-Konformitätserklärung –** *Original*
**EC declaration of conformity**

Seite *Page* 2 / 2
**DCTC 30136-002:** 2021-08-27

Sonstige angewandte technische Normen / *Other technical standards applied:*

| **Norm / *Standard*** | **Titel / *Title*** | **Ausgabe / *Edition*** |
|---|---|---|
| EN 61508-1 bis -7<br>(IEC 61508-1 bis -7 | Funktionale Sicherheit sicherheitsbezogener elektrischer/elektronischer/programmierbarer elektronischer Systeme /<br>*Functional safety of electrical/electronic/programmable electronic safety-related systems* | 2010<br>*(2010)* |
| EN 61800-5-1<br>*(IEC 61800-5-1)* | Elektrische Leistungsantriebssysteme mit einstellbarer Drehzahl – Teil 5-1: Anforderungen an die Sicherheit – Elektrische, thermische und energetische Anforderungen /<br>*Adjustable speed electrical power drive systems – Part 5-1: Safety requirements – Electrical, thermal and energy* | 2007+A1:2017<br>*(2007+A1:2016)* |
| EN 61800-5-2<br>*(IEC 61800-5-2)* | Elektrische Leistungsantriebssysteme mit einstellbarer Drehzahl – Teil 5-2: Anforderungen an die Sicherheit – Funktionale Sicherheit /<br>*Adjustable speed electrical power drive systems – Part 5-2: Safety requirements - Functional* | 2017<br>*(2016)* |

Benannte Stelle, die das EG-Baumusterprüfverfahren nach oben genannter Richtlinie durchgeführt hat /
*Notified body that has conducted the EC type-examination procedure in accordance with the above-mentioned directive*
Name, address, identification number: TÜV Rheinland Industrie Service GmbH, Am Grauen Stein, 51105 Köln / Germany, 0035
No. of EC type-examination certificate: 01/205/5862.00/21

Nachfolgende Person ist bevollmächtigt, die relevanten technischen Unterlagen zusammenstellen /
*The individual below is authorized to compile the relevant technical files:*
Name, Anschrift: Christian Russo, DC-AE/EPI3, Bürgermeister-Dr.-Nebel-Str. 2, 97816 Lohr a.Main / Germany

Weitere Erläuterungen / *Further explanations:*
Das Sicherheitstechnik-Optionsmodul T0 ist entsprechend SIL 3 nach EN 61800-5-2 / EN 61508, SIL CL 3 nach EN 62061 und Kategorie 4 / PL e nach EN ISO 13849-1 ausgeführt./
*The optional safety function modul T0 fulfils the requirements of SIL 3 according to EN 61800-5-2 / EN 61508, SIL CL 3 according to EN 62061 and Category 4 / PL e according to EN ISO 13489-1.*

| Lohr a.Main , | 2021-08-27 | ppa. | i.V. |
|---|---|---|---|
| Ort / *place* | Datum / *date* | Uwe Czychy<br>Werksleitung LoP2 /<br>*Plant Manager LoP2* | Ralf Brod<br>Product Owner Drives DC-AE/PJ-DPL |

Änderungen im Inhalt der EG-Konformitätserklärung sind vorbehalten. Derzeit gültige Ausgabe auf Anfrage.
*We reserve the right to make changes to the content of the EC Declaration of Conformity. Current issue on request.*

## 8.2 UL/CSA certification

The components are listed by **UL** (Underwriters Laboratories Inc.®).

Find the proof of certification on the Internet. Enter the terms "UL" and "databases" in a search engine to access the relevant UL web page. Use the file number to find the proof of certification.

Table 33: C-UL listing

| | |
|---|---|
| c UL US<br>Listed<br>POW. CONV. EQ.<br>97Y4<br>DX000008 | • UL standard: 61800-5-1<br>• CSA standard: Canadian Standard CSA C22.2 No. 274-17 |
| | **Company name**<br>BOSCH REXROTH AG<br>Category Name:<br>• Power Conversion Equipment<br>• Transformers, General Purpose - Component |
| | **File numbers**<br>ctrlX DRIVE components:<br>• E134201<br>• E328841<br>Additional components<br>• E329212<br>• E214694<br>• E181051 |

**UL ratings**

When using the component in the scope of CSA / UL, take the UL ratings for each component into account.

Make sure that the specified **short-circuit current rating SCCR** is not exceeded, e.g. by providing appropriate fuses in the mains connection of the supply unit.

**UL wiring material**

In the scope of CSA / UL, use copper 60/75 °C only; class 1 or equivalent only.

**Allowed pollution degree**

Comply with the allowed pollution degree of the components (see "Ambient and operating conditions").

## 8.3 EAC label

| EAC | Certificate | Declaration of conformity |
|---|---|---|
| Low-voltage devices | TR ZU 004/2011 | DCTC-30834-004 |
| EMC | TR ZU 020/2011 | |
| Certificate number | 0254800 | |

## 8.4 UKCA marking

### 8.4.1 Overview

| UK CA | Standard | Declaration of conformity *) |
|---|---|---|
| Electrical Equipment (Safety) Regulation | EN 61800-5-1 | DCTC-30337-031<br>DCTC-30337-032<br>DCTC-30337-033 |
| Electromagnetic Compatibility Regulation | EN 61800-3 | |
| Ecodesign for Energy-Related Products and Energy Information | EN 61800-9-2 | |
| Supply of Machinery (Safety) Regulation | EN ISO 13849-1<br>EN 62061<br>EN 61800-5-1<br>EN 61800-5-2<br>EN 61508-1 ... 7 | DCTC-30136-031<br>DCTC-30136-032<br>DCTC-30136-004 |
| *) Declaration of conformity in Bosch Rexroth media directory: ➦ www.boschrexroth.com/mediadirectory, search term e.g. "DCTC-30337-031" | | |

## 8.4.2 Declaration of conformity (Machinery Directive)

### SafeMotion

rexroth
A Bosch Company

**UK Declaration of Conformity**

Doc. No.: DCTC-30136-034
Date: 2022-09-09

- ☒ in accordance with Supply of Machinery (Safety) Regulation 2008, S.I. 2008/1597
- ☐ in accordance with Electrical Equipment (Safety) Regulation 2016, S.I. 2016/1101
- ☐ in accordance with Electromagnetic Compatibility Regulation 2016, S.I. 2016/1091
- ☐ in accordance with Equipment and Protective Systems Intended for Use in Potentially Explosive Atmospheres Regulations 2016, S.I. 2016/1107
- ☐ in accordance with Ecodesign for Energy-Related Products and Energy Information (Amendment) (EU Exit) Regulations 2019, S.I. 2019/539
- ☐ in accordance with Restriction of the Use of Certain Hazardous Substances in Electrical and Electronic Equipment Regulations 2012, S.I. 2012/3032

Scope of RoHS Directive for products of the manufacturer:
DCTC-30806-006 "Declaration of compliance to the RoHS Directive 2011/65/EU & 2015/863/EU"

The manufacturer
Bosch Rexroth AG, Bgm.-Dr.-Nebel-Str. 2, 97816 Lohr a.Main / Germany

hereby declares that the product below

Name: Optional safety function modules M5 and EC (SafeMotion) for the electric drive system "ctrlX DRIVEplus", second generation

Types:

| | |
|---|---|
| XCS2-**-02***M5****-* | XMS2-**-02***M5****-* |
| XCD2-**-02***M5****-* | XMD2-**-02***M5****-* |
| XCS2-**-02***M5EC**-* | XMS2-**-02***M5EC**-* |
| XCD2-**-02***M5EC**-* | XMD2-**-02***M5EC**-* |

Trade name: Rexroth
from the date of manufacture: 2022-09-09

were developed, designed and manufactured in compliance with the above-mentioned statutory instrument(s).

This UK Declaration of Conformity is issued under the sole responsibility of the manufacturer.

Designated Standards or other technical standards and regulations applied:

| Standard | Name | Issue |
|---|---|---|
| EN ISO 13849-1 | Safety of machinery - Safety-related parts of control systems - Part 1: General principles for design | 2015 |
| EN 62061 | Safety of machinery - Functional safety of safety-related electrical, electronic and programmable electronic control systems | 2005/AC:2010/A1:2013/A2:2015 |
| EN 61800-5-2 | Adjustable speed electrical power drive systems - Part 5-2: Safety requirements Functional | 2007 |
| EN 61508-1 bis -7 | Functional safety of electrical/electronic/programmable electronic safety-related systems | 2010 |
| EN 61800-5-1 | Adjustable speed electrical power drive systems – Part 5-1: Safety requirements – Electrical, thermal and energy | 2007 |

© Bosch Rexroth AG 2022

DCTC 30136-034_KOE_N_EN_2022-09-09.docx

Page 1 / 2

**UK Declaration of Conformity**

Page 2 / 2
**DCTC-30136-034:** 2022-09-09

Notified body that has conducted the EC type-examination procedure in accordance with the above-mentioned directive
Name, address, identification number: TÜV Rheinland Industrie Service GmbH, Am Grauen Stein, 51105 Köln / Germany, 0035
No. of EC type-examination certificate: 01/205/5862.00/21

The individual below is authorized to compile the relevant technical files:
Name: Bosch Rexroth AG, Christian Russo (DC-AE/EPI3)
Address: Bgm.-Dr.-Nebel-Str. 2, 97816 Lohr a.Main / Germany

Further explanations:
The optional safety function modules M5 and EC fulfil the requirements of SIL 3 according to EN 61800-5-2 / EN 61508, SIL CL 3 according to EN 62061 and Category 4 / PL e according to EN ISO 13489-1.

| Lohr a.Main , | 2022-09-09 | ppa. | p.p. |
|---|---|---|---|
| Place | Date | Uwe Czychy<br>Plant Manager LoP2 | Ralf Brod<br>Product Owner Drives DC-AE/PJ-DPL |

We reserve the right to make changes to the content of the UK Declaration of Conformity. Current issue on request.

## Safe Torque Off (XC*1-*..., XM*1-*...)

rexroth
A Bosch Company

### UK Declaration of Conformity

Doc. No.: DCTC-30136-031
Date: 2022-09-09

- ☒ in accordance with Supply of Machinery (Safety) Regulation 2008, S.I. 2008/1597
- ☐ in accordance with Electrical Equipment (Safety) Regulation 2016, S.I. 2016/1101
- ☐ in accordance with Electromagnetic Compatibility Regulation 2016, S.I. 2016/1091
- ☐ in accordance with Equipment and Protective Systems Intended for Use in Potentially Explosive Atmospheres Regulations 2016, S.I. 2016/1107
- ☐ in accordance with Ecodesign for Energy-Related Products and Energy Information (Amendment) (EU Exit) Regulations 2019, S.I. 2019/539
- ☐ in accordance with Restriction of the Use of Certain Hazardous Substances in Electrical and Electronic Equipment Regulations 2012, S.I. 2012/3032

Scope of RoHS Directive for products of the manufacturer:
DCTC-30806-006 "Declaration of compliance to the RoHS Directive 2011/65/EU & 2015/863/EU"

The manufacturer
Bosch Rexroth AG, Bgm.-Dr.-Nebel-Str. 2, 97816 Lohr a.Main / Germany

hereby declares that the product below

Name: Optional safety function module T0 (Safe Torque Off)
for the electric drive system „ctrlX DRIVE" and "ctrlX DRIVEplus"

Types: XC*1-*... XM*1-*...

Trade name: Rexroth
from the date of manufacture: 2022-09-09

was developed, designed and manufactured in compliance with the above-mentioned statutory instrument(s).

This UK Declaration of Conformity is issued under the sole responsibility of the manufacturer.

Designated Standards or other technical standards and regulations applied:

| Standard | Name | Issue |
|---|---|---|
| EN ISO 13849-1 | Safety of machinery - Safety-related parts of control systems - Part 1: General principles for design | 2015 |
| EN 62061 | Safety of machinery - Functional safety of safety-related electrical, electronic and programmable electronic control systems | 2005/AC:2010/A1:2013/A2:2015 |
| EN 61800-5-2 | Adjustable speed electrical power drive systems - Part 5-2: Safety requirements Functional | 2007 |
| EN 61508-1 bis -7 | Functional safety of electrical/electronic/programmable electronic safety-related systems | 2010 |
| EN 61800-5-1 | Adjustable speed electrical power drive systems – Part 5-1: Safety requirements – Electrical, thermal and energy | 2007 |

Notified body that has conducted the EC type-examination procedure in accordance with the above-mentioned directive
Name, address, identification number: TÜV Rheinland Industrie Service GmbH, Am Grauen Stein, 51105 Köln / Germany, 0035
No. of EC type-examination certificate: 01/205/5652.01/20

© Bosch Rexroth AG 2022

DCTC 30136-031_KOE_N_EN_2022-09-09.docx

Page 1 / 2

**UK Declaration of Conformity**

Page 2 / 2
**DCTC-30136-031:** 2022-09-09

The individual below is authorized to compile the relevant technical files:
Name: Bosch Rexroth AG, Christian Russo (DC-AE/EPI3)
Address: Bgm.-Dr.-Nebel-Str. 2, 97816 Lohr a.Main / Germany

Further explanations:
The optional safety function module T0 fulfils the requirements of SIL 3 according to EN 61800-5-2 / EN 61508, SIL CL 3 according to EN 62061 and Category 4 / PL e according to EN ISO 13489-1

| Lohr a.Main , | 2022-09-09 | ppa. | p.p. |
|---|---|---|---|
| Place | Date | Uwe Czychy<br>Plant Manager LoP2 | Ralf Brod<br>Product Owner Drives DC-AE/PJ-DPL |

We reserve the right to make changes to the content of the UK Declaration of Conformity. Current issue on request.

## Safe Torque Off (XC*2-*..., XM*2-*...)

rexroth
A Bosch Company

### UK Declaration of Conformity

Doc. No.: DCTC-30136-032
Date: 2022-09-09

- ☒ in accordance with Supply of Machinery (Safety) Regulation 2008, S.I. 2008/1597
- ☐ in accordance with Electrical Equipment (Safety) Regulation 2016, S.I. 2016/1101
- ☐ in accordance with Electromagnetic Compatibility Regulation 2016, S.I. 2016/1091
- ☐ in accordance with Equipment and Protective Systems Intended for Use in Potentially Explosive Atmospheres Regulations 2016, S.I. 2016/1107
- ☐ in accordance with Ecodesign for Energy-Related Products and Energy Information (Amendment) (EU Exit) Regulations 2019, S.I. 2019/539
- ☐ in accordance with Restriction of the Use of Certain Hazardous Substances in Electrical and Electronic Equipment Regulations 2012, S.I. 2012/3032

Scope of RoHS Directive for products of the manufacturer:
DCTC-30806-006 "Declaration of compliance to the RoHS Directive 2011/65/EU & 2015/863/EU"

The manufacturer
Bosch Rexroth AG, Bgm.-Dr.-Nebel-Str. 2, 97816 Lohr a.Main / Germany

hereby declares that the product below

| | | |
|---|---|---|
| Name: | Optional safety function module T0 (Safe Torque Off) for the electric drive system „ctrlX DRIVE" and "ctrlX DRIVEplus", second generation | |
| Types: | XC*2-*... | XM*2-*... |
| Trade name: | Rexroth | |
| from the date of manufacture: | 2022-09-09 | |

were developed, designed and manufactured in compliance with the above-mentioned statutory instrument(s).

This UK Declaration of Conformity is issued under the sole responsibility of the manufacturer.

Designated Standards or other technical standards and regulations applied:

| Standard | Name | Issue |
|---|---|---|
| EN ISO 13849-1 | Safety of machinery - Safety-related parts of control systems - Part 1: General principles for design | 2015 |
| EN 62061 | Safety of machinery - Functional safety of safety-related electrical, electronic and programmable electronic control systems | 2005/AC:2010/A1:2013/A2:2015 |
| EN 61800-5-2 | Adjustable speed electrical power drive systems - Part 5-2: Safety requirements Functional | 2007 |
| EN 61508-1 bis -7 | Functional safety of electrical/electronic/programmable electronic safety-related systems | 2010 |
| EN 61800-5-1 | Adjustable speed electrical power drive systems – Part 5-1: Safety requirements – Electrical, thermal and energy | 2007 |

Notified body that has conducted the EC type-examination procedure in accordance with the above-mentioned directive
Name, address, identification number: TÜV Rheinland Industrie Service GmbH, Am Grauen Stein, 51105 Köln / Germany, 0035
No. of EC type-examination certificate: 01/205/5862.00/21

Page 1 / 2

© Bosch Rexroth AG 2022

DCTC 30136-032_KOE_N_EN_2022-09-09.docx

**UK Declaration of Conformity**

Page 2 / 2
**DCTC-30136-032:** 2022-09-09

The individual below is authorized to compile the relevant technical files:
Name: Bosch Rexroth AG, Christian Russo (DC-AE/EPI3)
Address: Bgm.-Dr.-Nebel-Str. 2, 97816 Lohr a.Main / Germany

Further explanations:
The optional safety function modul T0 fulfils the requirements of SIL 3 according to EN 61800-5-2 / EN 61508, SIL CL 3 according to EN 62061 and Category 4 / PL e according to EN ISO 13489-1.

| Lohr a.Main , | 2022-09-09 | ppa. | p.p. |
|---|---|---|---|
| Place | Date | Uwe Czychy<br>Plant Manager LoP2 | Ralf Brod<br>Product Owner Drives DC-AE/PJ-DPL |

We reserve the right to make changes to the content of the UK Declaration of Conformity. Current issue on request.

# 9 Interfaces

## 9.1 Connection points for power section/control section

**NOTICE**

**Installation:**

- Install **strain relief** for all cables.
  This prevents inadmissible forces from acting on connectors and connection points at the power section/control section.
  Strain relief (examples):
  - Strain relief rail for top-hat rail/C-rail/screw mounting
  - Bracket clips for C-rail

  **Shield connections of the devices (e.g., XAS2 accessories) cannot be used for strain relief!**

- **To minimize EMC problems:**
  - Run **control cables** (cables for digital/analog signals) upwards
  - Run **power cables** (power supply cables, motor cables) downwards
  - Mount cables for **analog encoders** (D-Sub) with cable outlet upwards
  - Cables for **digital encoders** may also be run downwards (with a distance > 10 cm to power cables)

| Power section (example XCS) | Control section (example XCS) |
|---|---|
| 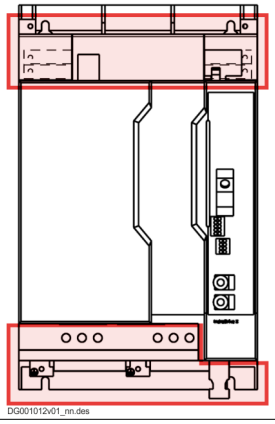 | 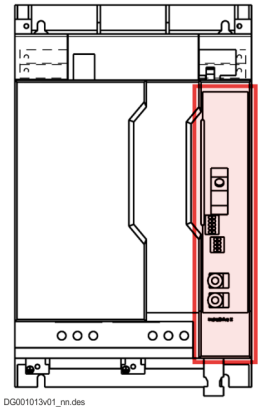 |
| ➦Chapter 9.2 XCS, power section connection points on page 108 | ➦Chapter 9.10 Control section connection points on page 126 |

## 9.2 XCS, power section connection points

### 9.2.1 XCS*-*0010/23

Table 34: XCS*-*0010/23

| Front | Top | Bottom |
|---|---|---|
| 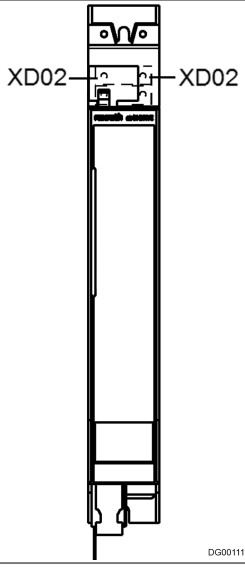  | 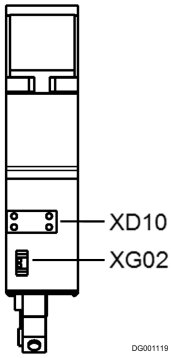  | 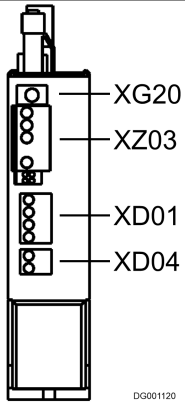  |
| XD02: DC bus | XD10: Control voltage<br>XG02: Ready for operation relay contact | XD01: Mains connection<br>XD04: Braking resistor<br>XG20: Digital encoder connection<br>XZ03: Hybrid connection (motor, motor temperature monitoring, motor holding brake) |

### 9.2.2 XCS*-*0054/70/90

Table 35: XCS*-*0054/70/90

| Front | Top | Bottom |
|---|---|---|
| 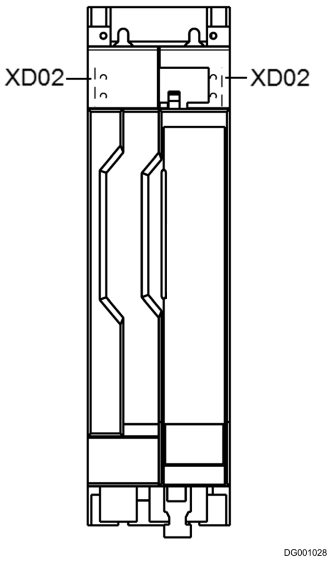 | 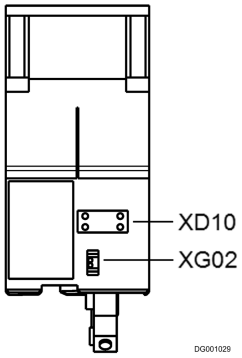 | 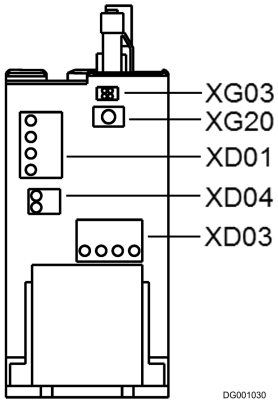 |
| XD02: DC bus | XD10: Control voltage<br>XG02: Ready for operation relay contact | XD01: Mains connection<br>XD03: Motor connection<br>XD04: Braking resistor<br>XG03: Motor temperature monitoring and motor holding brake<br>XG20: Digital encoder connection |

### 9.2.3 XCS*-W0100/120

Table 36: XCS*W0100/120

| Front | Top | Bottom |
|---|---|---|
| 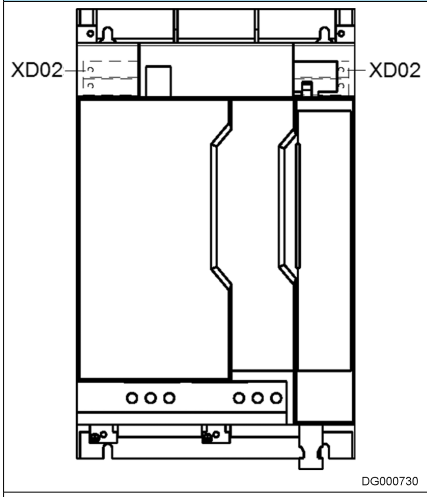 | 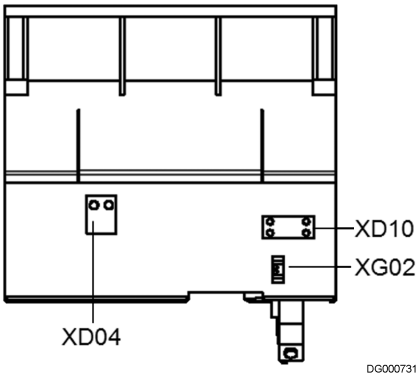 | 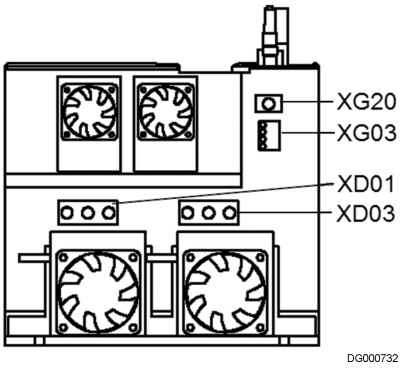 |
| XD02: DC bus | XD04: Braking resistor<br>XD10: Control voltage<br>XG02: Ready for operation relay contact | XD01: Mains connection<br>XD03: Motor connection<br>XG03: Motor temperature monitoring and motor holding brake<br>XG20: Digital encoder connection |

### 9.2.4 XCS*-W0150/180

Table 37: XCS*W0150/180

| Front | Top | Bottom |
|---|---|---|
| 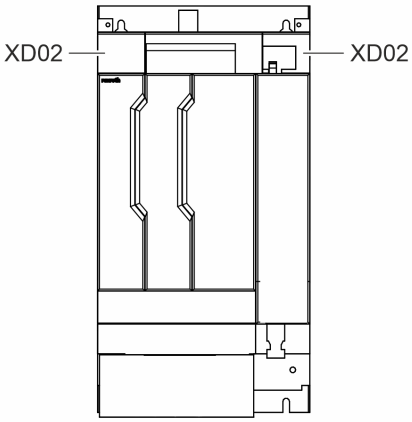 | 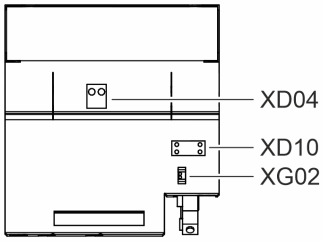 | 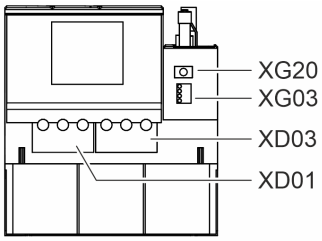 |
| XD02: DC bus | XD04: Braking resistor<br>XD10: Control voltage<br>XG02: Ready for operation relay contact | XD01: Mains connection<br>XD03: Motor connection<br>XG03: Motor temperature monitoring and motor holding brake<br>XG20: Digital encoder connection |

### 9.2.5 XCS*-*02xx/*03xx

Table 38: XCS*-*02xx/*03xx

| Front | Top | Bottom |
|---|---|---|
| 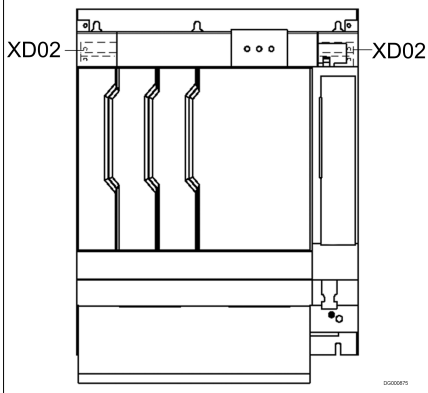 | 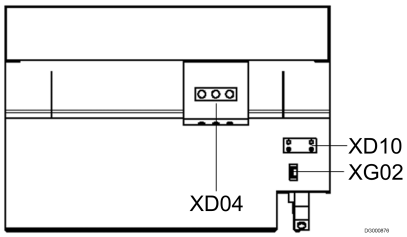 | 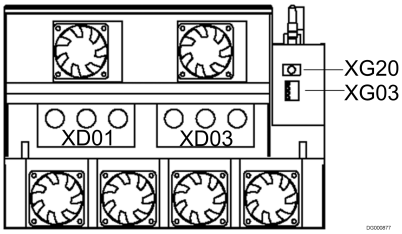 |
| XD02: DC bus | XD04: Braking resistor<br>XD10: Control voltage<br>XG02: Ready for operation relay contact | XD01: Mains connection<br>XD03: Motor connection<br>XG03: Motor temperature monitoring and motor holding brake<br>XG20: Digital encoder connection |

## 9.3 XCD, power section connection points

### 9.3.1 XCD*-W2323

Table 39: Connection points

| Front | Top | Bottom |
|---|---|---|
| 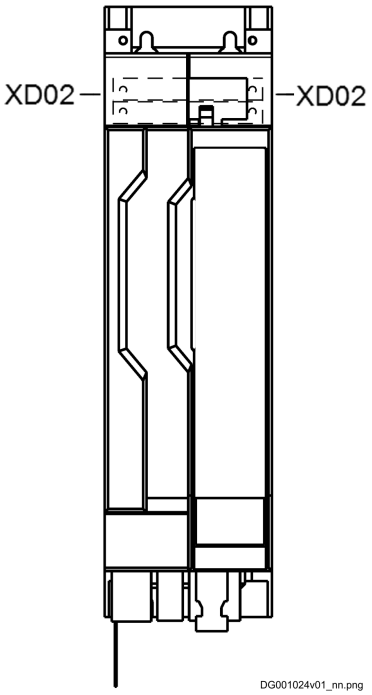 | 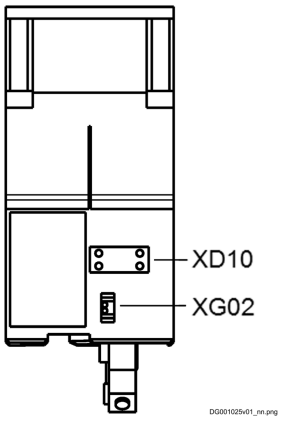 | 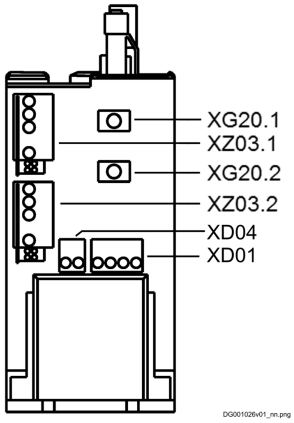 |
| XD02: DC bus | XD10: Control voltage<br>XG02: Ready for operation relay contact | XD01: Mains connection<br>XD04: Braking resistor<br>XG20: Digital encoder connection<br>XZ03: Hybrid connection (motor, motor temperature monitoring, motor holding brake) |

## 9.4 XMS, power section connection points

### 9.4.1 XMS*-W0006 ... 36

Table 40: Connection points XMS*-W0006 ... 36

| Front | Top | Bottom |
|---|---|---|
| 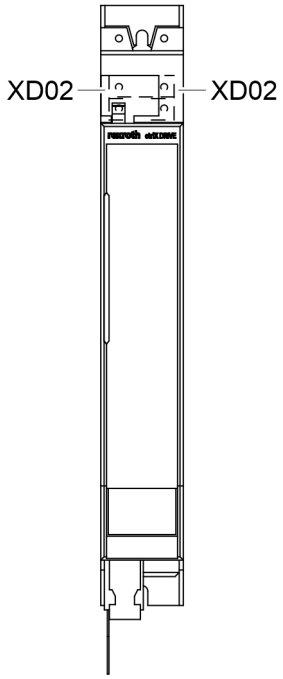 | 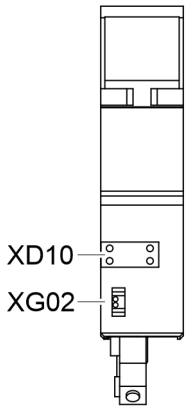 | 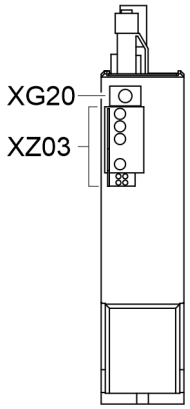 |
| XD02: DC bus | XD10: Control voltage<br>XG02: Ready for operation relay contact | XG20: Digital encoder connection<br>XZ03: Hybrid connection (motor, motor temperature monitoring, motor holding brake) |

### 9.4.2 XMS*-*0054 ... 90

Table 41: Connection points XMS*-*W0054 ... 90

| Front | Top | Bottom |
|---|---|---|
| 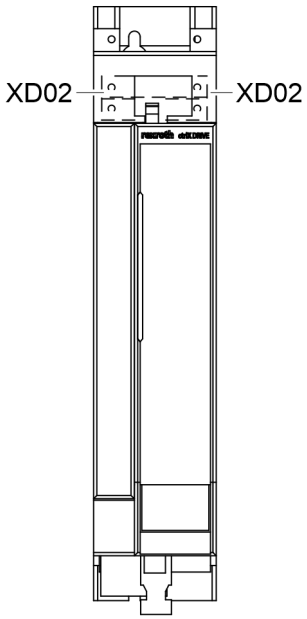 | 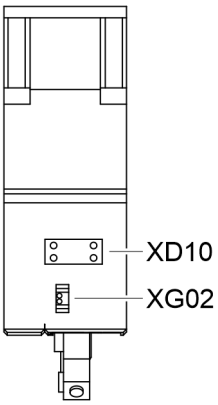 | 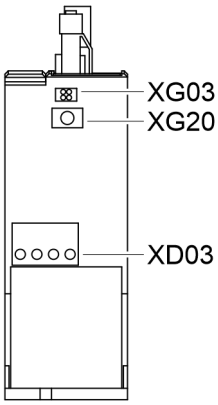 |
| XD02: DC bus | XD10: Control voltage<br>XG02: Ready for operation relay contact | XG20: Digital encoder connection<br>XG03: Motor temperature monitoring and motor holding brake<br>XD03: Motor connection |

### 9.4.3 XMS*-W0100, -W0120

Table 42: Connection points XMS*-W0100, -W0120

| Front | Top | Bottom |
|---|---|---|
| 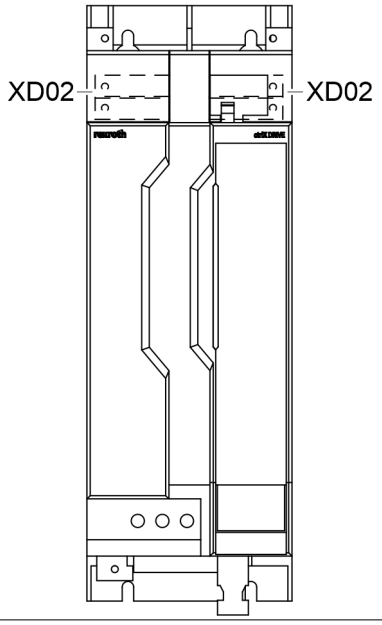 | 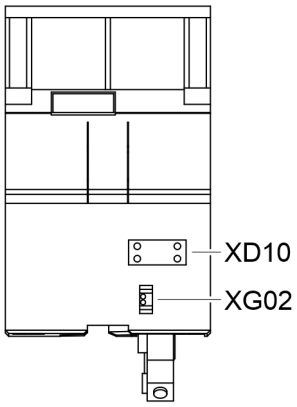 | 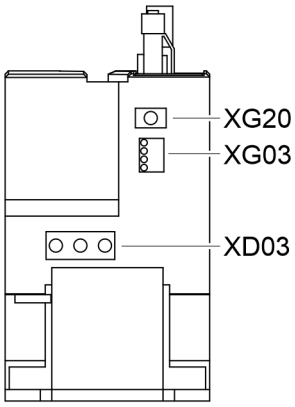 |
| XD02: DC bus | XD10: Control voltage<br>XG02: Ready for operation relay contact | XG20: Digital encoder connection<br>XG03: Motor temperature monitoring and motor holding brake<br>XD03: Motor connection |

### 9.4.4 XMS*-W0150, -W0180

Table 43: Connection points XMS*-W0150, -W0180

| Front | Top | Bottom |
|---|---|---|
| 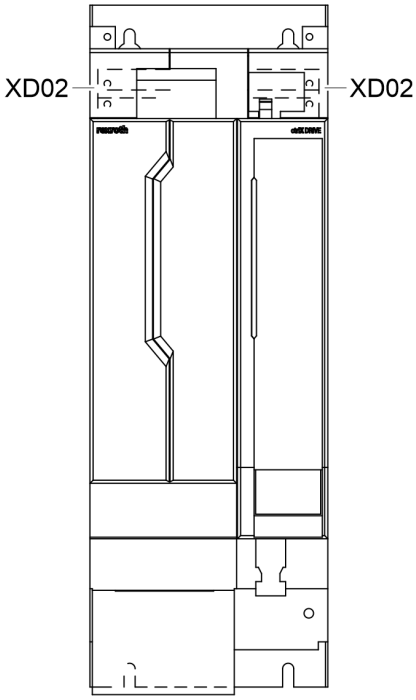 | 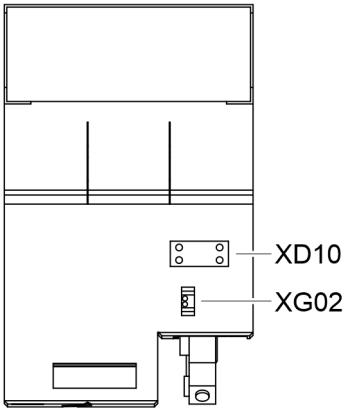 | 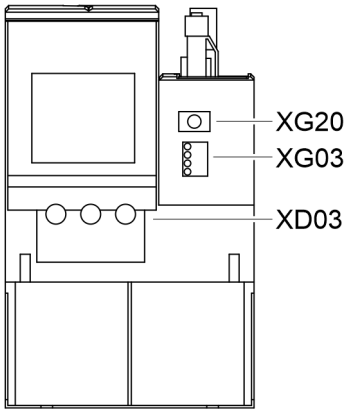 |
| XD02: DC bus | XD10: Control voltage<br>XG02: Ready for operation relay contact | XG20: Digital encoder connection<br>XG03: Motor temperature monitoring and motor holding brake<br>XD03: Motor connection |

### 9.4.5 XMS*-*0210 ... 375

Table 44: Connection points XMS*-*0210 ... 375

| Front | Top | Bottom |
|---|---|---|
| 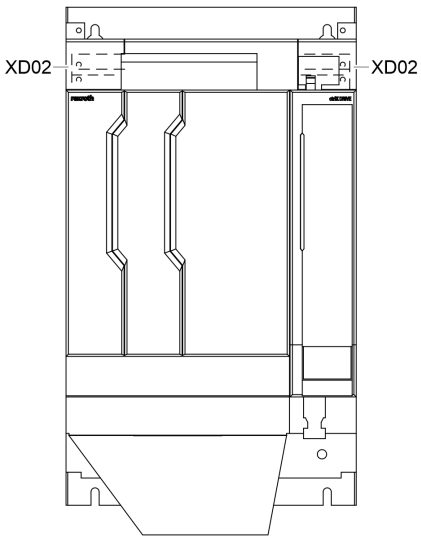 | 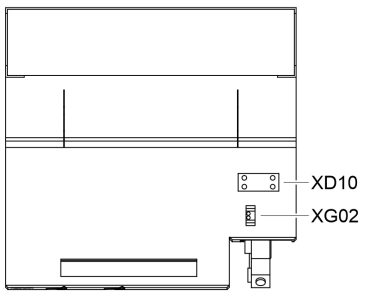 | 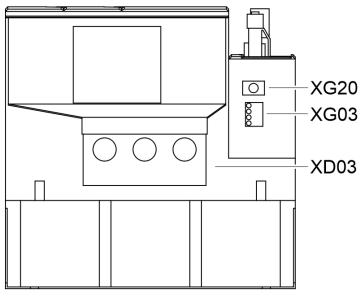 |
| XD02: DC bus | XD10: Control voltage<br>XG02: Ready for operation relay contact | XG20: Digital encoder connection<br>XG03: Motor temperature monitoring and motor holding brake<br>XD03: Motor connection |

## 9.5 XMD, power section connection points

### 9.5.1 XMD*-W0606 ... W3636

Table 45: Connection points

| Front | Top | Bottom |
|---|---|---|
| 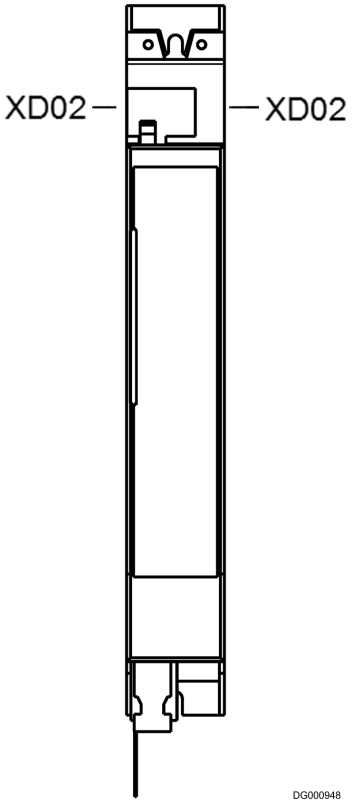 | 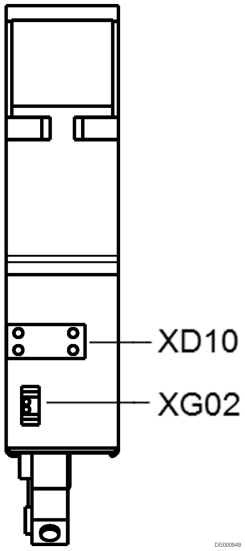 | 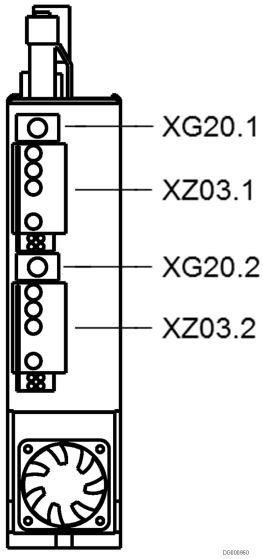 |
| XD02: DC bus | XD10: Control voltage<br>XG02: Ready for operation relay contact | XG20: Digital encoder connection<br>XZ03: Motor connection + motor temperature monitoring and motor holding brake |

### 9.5.2 XMD*-*5454/-*7070

Table 46: Connection points

| Front | Top | Bottom |
|---|---|---|
| 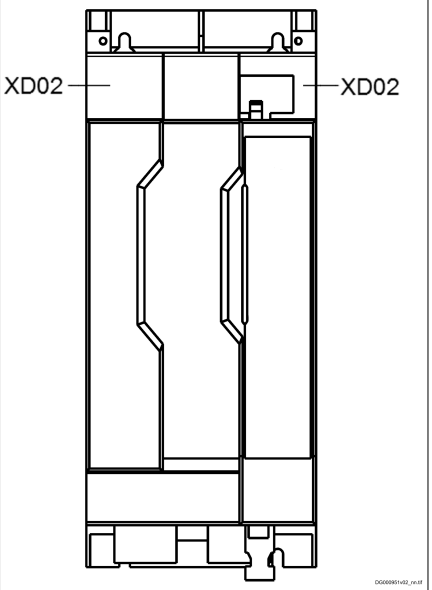 | 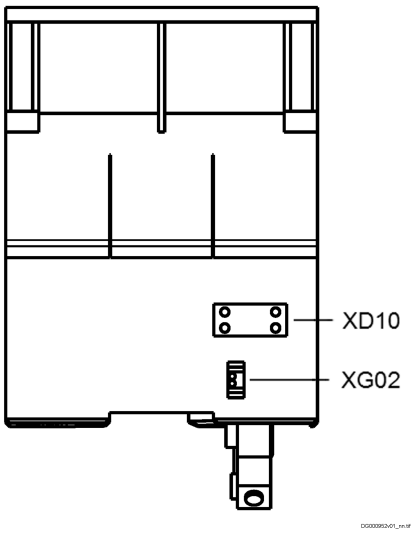 | 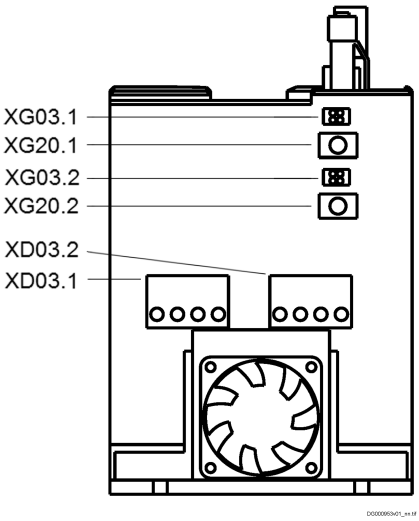 |
| XD02: DC bus | XD10: Control voltage<br>XG02: Ready for operation relay contact | XG20: Digital encoder connection<br>XD03: Motor connection<br>XG03: Motor temperature monitoring and motor holding brake |

## 9.6 XMQ*-WQ001, connection points

Table 47: Connection points

| Front | Top | Bottom |
|---|---|---|
| 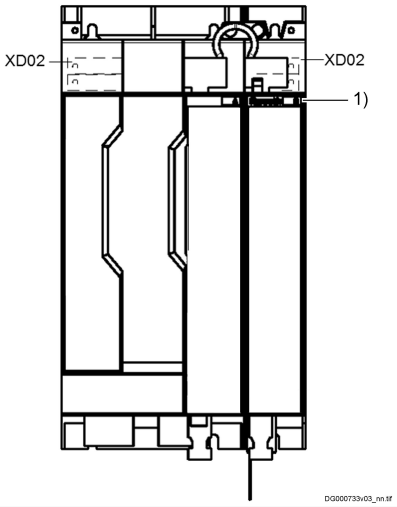 | 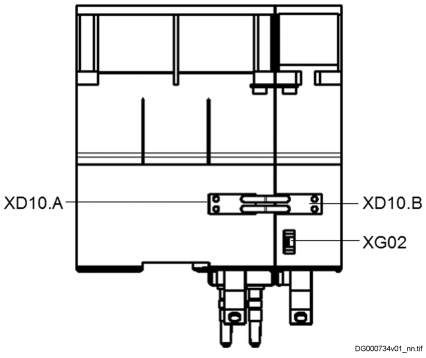 | 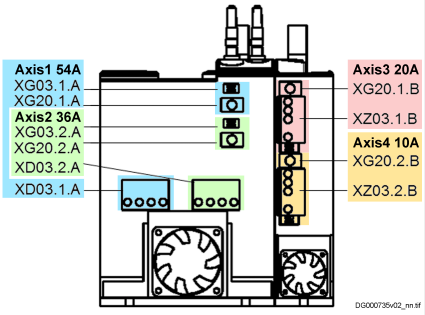 |
| 1) Letter identifying the axis module.<br>XD02: DC bus | X...A, X...B: Connection points of axis module A or B<br>XD10: Control voltage<br>XG02: Ready for operation relay contact | X...A, X...B: Connection points of axis module A or B<br>XD03: Motor connection<br>XG03: Motor temperature monitoring and motor holding brake<br>XG20: Digital encoder connection<br>XZ03: Hybrid connection (motor, motor temperature monitoring, motor holding brake) |

## 9.7 XMQ*-WQ002, connection points

Table 48: Connection points

| Front | Top | Bottom |
|---|---|---|
| 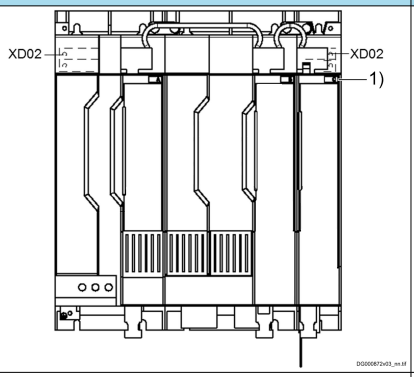 | 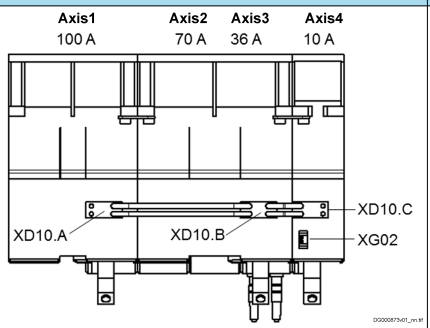 | 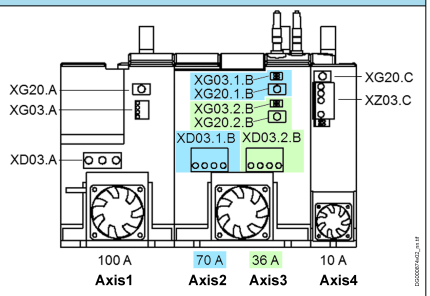 |
| 1) Letter identifying the axis module.<br>XD02: DC bus | X...A, X...B, X...C: Connection points of axis module A, B or C<br>XD10: Control voltage<br>XG02: Ready for operation relay contact | X...A, X...B, X...C: Connection points of axis module A, B or C<br>XD03: Motor connection<br>XG03: Motor temperature monitoring and motor holding brake<br>XG20: Digital encoder connection<br>XZ03: Hybrid connection (motor, motor temperature monitoring, motor holding brake) |

## 9.8 XVR, power section connection points

### 9.8.1 XVR*-W0019

| Front | Top | Bottom |
|---|---|---|
| 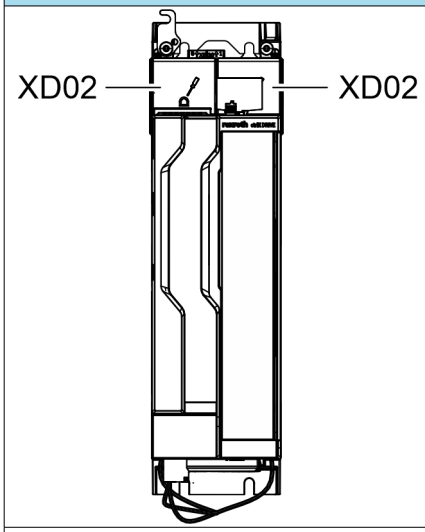 | 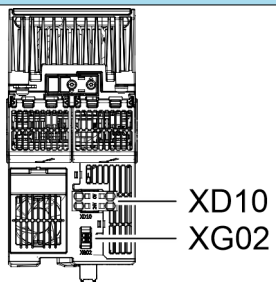 | 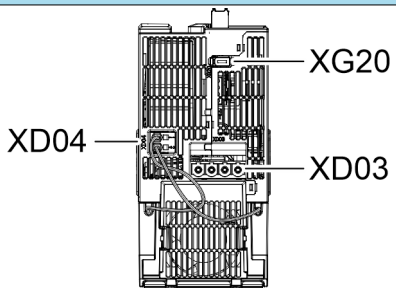 |
| XD02: DC bus | XD10: Control voltage<br>XG02: Ready for operation relay contact | XD03: Mains XLI-XVR<br>XD04: Braking resistor<br>XG20: XLI bus |

### 9.8.2 XVR*-W0048 ... W0100

| Front | Top | Bottom |
|---|---|---|
| 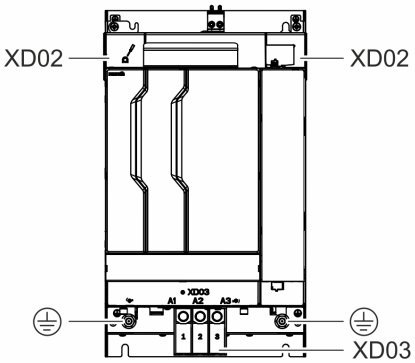 | 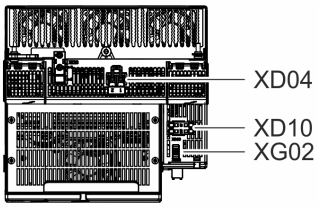 | 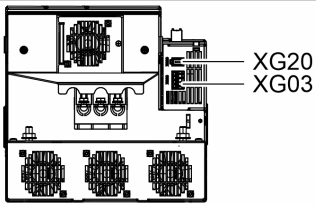 |
| XD02: DC bus<br>XD03: Mains XLI-XVR | XD04: Braking resistor<br>XD10: Control voltage<br>XG02: Ready for operation relay contact | XG20: XLI bus<br>XG03: Without function |

# 9.9 XVE, connection points

## 9.9.1 XVE*-W0030

| Front | Top | Bottom |
|---|---|---|
| 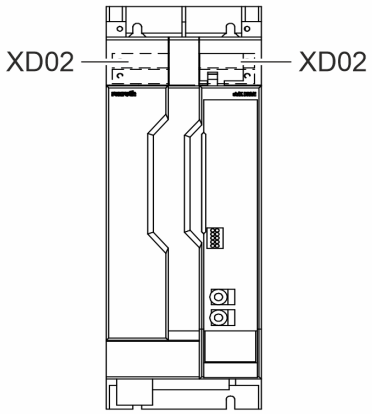 | 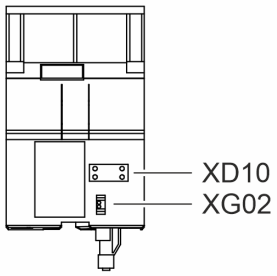 | 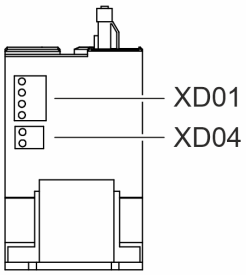 |
| XD02: DC bus | XD10: Control voltage<br>XG02: Ready for operation relay contact | XD01: Mains<br>XD04: Braking resistor |

## 9.9.2 XVE*-W0075

| Front | Top | Bottom |
|---|---|---|
| 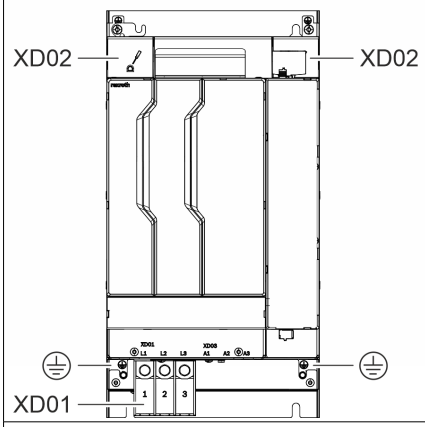 | 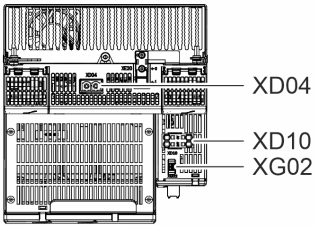 | 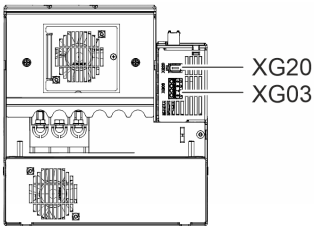 |
| XD01: Mains<br>XD02: DC bus | XD04: Braking resistor<br>XD10: Control voltage<br>XG02: Ready for operation relay contact | XG20: Without function<br>XG03: Without function |

### 9.9.3 XVE*-W0125

| Front | Top | Bottom |
|---|---|---|
| 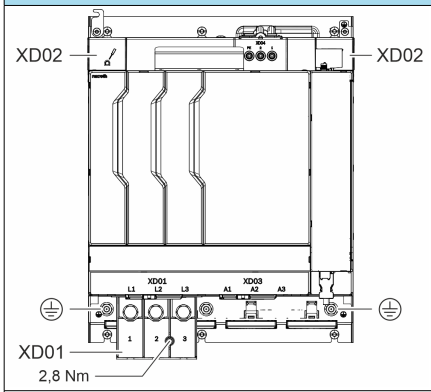 | 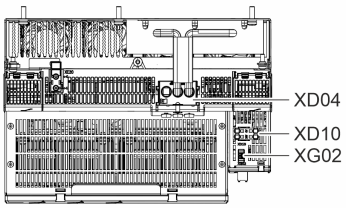 | 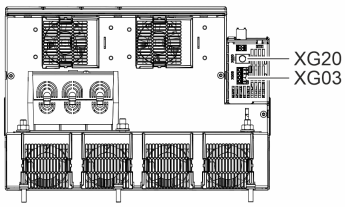 |
| XD01: Mains<br>(2.8 Nm: Touch guard tightening torque)<br>XD02: DC bus | XD04: Braking resistor<br>XD10: Control voltage<br>XG02: Ready for operation relay contact | XG20: Without function<br>XG03: Without function |

# 9.10 Control section connection points

## 9.10.1 Control section types

Control sections are not stand-alone products, but integrated parts of the drive controllers and supply units.

### Type code

The type code positions 15 ... 25 define the control sections.

Table 49: Type code (control unit)

| Short type designation | 1 | 2 | 3 | 4 | 5 | 6 | 7 | 8 | 9 | 10 | 11 | 12 | 13 | 14 | 15 | 16 | 17 | 18 | 19 | 20 | 21 | 22 | 23 | 24 | 25 | 26 | 27 | 28 | 29 | 30 | 31 | 32 | 33 | 34 | 35 | 36 | 37 | 38 | 39 | 40 |
|---|---|---|---|---|---|---|---|---|---|---|---|---|---|---|---|---|---|---|---|---|---|---|---|---|---|---|---|---|---|---|---|---|---|---|---|---|---|---|---|---|
| Example: | X | C | S | 2 | - | W | 0 | 0 | 5 | 4 | A | B | N | - | 0 | 1 | N | E | T | T | 0 | E | C | N | N | - | S | 0 | 1 | R | S | N | 2 | N | N | N | 2 | D | N | N |
| | | | | | | | | | | | | | | | ⑦ | | ⑧ | ⑨ | | ⑩ | | ⑪ | | ⑫ | | | | | | | | | | | | | | | | |
| ⑦ | **Control section design:**<br>01 = ctrlX DRIVE<br>02 = ctrlX DRIVEplus | | | | | | | | | | | | | | | | | | | | | | | | | | | | | | | | | | | | | | | |
| ⑧ | **Control panel:**<br>N = Without<br>A = With control panel | | | | | | | | | | | | | | | | | | | | | | | | | | | | | | | | | | | | | | | |
| ⑨ | **Communication option:**<br>ET = Sercos / EtherCAT with RJ45<br>X3 = ctrlX CORE<br>DL = DRIVElink | | | | | | | | | | | | | | | | | | | | | | | | | | | | | | | | | | | | | | | |
| ⑩ | **Option 1 (safety technology):**<br>T0 = Safe Torque Off (STO)<br>M5 = SafeMotion (M5) | | | | | | | | | | | | | | | | | | | | | | | | | | | | | | | | | | | | | | | |
| ⑪ | **Option 2:**<br>EC = Multi-encoder interface<br>NN = Not equipped | | | | | | | | | | | | | | | | | | | | | | | | | | | | | | | | | | | | | | | |
| ⑫ | **Option 3:**<br>EC = Multi-encoder interface<br>ET = Multi-Ethernet<br>DA = Digital/analog I/O extension<br>NN = Not equipped | | | | | | | | | | | | | | | | | | | | | | | | | | | | | | | | | | | | | | | |

### Single-axis (XMS, XCS)

Table 50: Single-axis

| Example: XCS with ctrlX DRIVEplus + ctrlX CORE | | | ctrlX DRIVE | ctrlX DRIVEplus | ctrlX DRIVEplus + ctrlX CORE |
|---|---|---|---|---|---|
| | | | 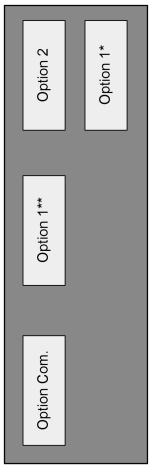 | 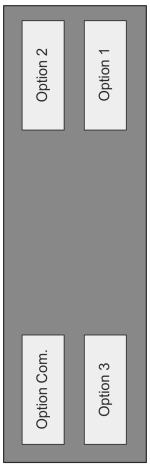 | 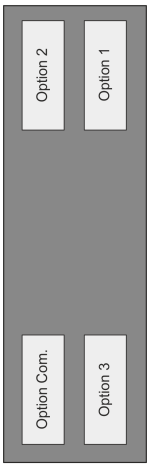 |
| XMS | Option 1 (safety technology) | T0 = Safe Torque Off (STO) | ✓ | ✓ | - |
| | | M5 = SafeMotion (M5) | - | ✓ | |
| | Option 2 | EC = Multi-encoder interface | ✓ | ✓ | |
| | | NN = Not equipped | ✓ | ✓ | |
| | Option 3 | ET = Multi-Ethernet | - | - | |
| | | EC = Multi-encoder interface | - | ✓ | |
| | | DA = Digital/analog I/O extension | - | ✓ | |
| | | NN = Not equipped | ✓ | ✓ | |
| | Option Com. (communication) | ET = Multi-Ethernet | ✓ | ✓ | |
| | | DL = DRIVElink | - | ✓ | |
| | | X3 = ctrlX CORE | - | - | |
| | | | | | |
| XCS | Option 1 (safety technology) | T0 = Safe Torque Off (STO) | ✓ | ✓ | ✓ |
| | | M5 = SafeMotion (M5) | - | ✓ | ✓ |
| | Option 2 | EC = Multi-encoder interface | ✓ | ✓ | ✓ |
| | | NN = Not equipped | ✓ | ✓ | ✓ |
| | Option 3 | ET = Multi-Ethernet | - | - | ✓ |
| | | EC = Multi-encoder interface | - | ✓ | - |
| | | DA = Digital/analog I/O extension | - | ✓ | - |
| | | NN = Not equipped | ✓ | ✓ | - |
| | Option Com. (communication) | ET = Multi-Ethernet | ✓ | ✓ | - |
| | | DL = DRIVElink | - | ✓ | - |
| | | X3 = ctrlX CORE | - | - | ✓ |
| | | | | | * : XCS1, XMS1<br>** : XCS2, XMS2 |

### Double-axis (XMD, XCD)

Table 51: Double-axis

| Example: XMD with ctrlX DRIVE | | | ctrlX DRIVE | ctrlX DRIVEplus | ctrlX DRIVEplus + ctrlX CORE |
|---|---|---|---|---|---|
| | | | 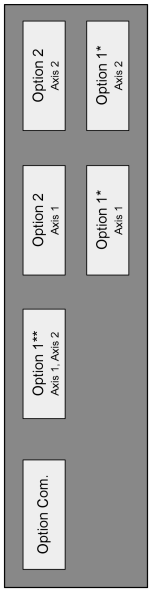 | 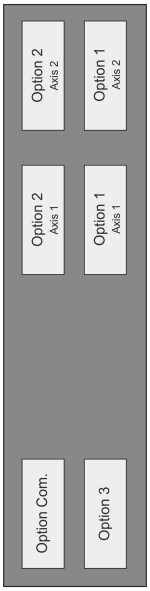 | 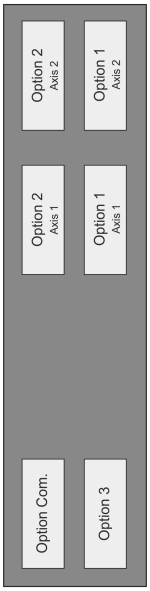 |
| XMD | Option 1 (safety technology) | T0 = Safe Torque Off (STO) | ✓ | ✓ | - |
| | | M5 = SafeMotion (M5) | - | ✓ | |
| | Option 2 | EC = Multi-encoder interface | ✓ | ✓ | |
| | | NN = Not equipped | ✓ | ✓ | |
| | Option 3 | ET = Multi-Ethernet | - | - | |
| | | NN = Not equipped | ✓ | ✓ | |
| | Option Com. (communication) | ET = Multi-Ethernet | ✓ | ✓ | |
| | | DL = DRIVElink | - | - | |
| | | X3 = ctrlX CORE | - | - | |
| | | | | | |
| XCD | Option 1 (safety technology) | T0 = Safe Torque Off (STO) | ✓ | ✓ | ✓ |
| | | M5 = SafeMotion (M5) | - | ✓ | ✓ |
| | Option 2 | EC = Multi-encoder interface | ✓ | ✓ | ✓ |
| | | NN = Not equipped | ✓ | ✓ | ✓ |
| | Option 3 | ET = Multi-Ethernet | - | - | ✓ |
| | | NN = Not equipped | ✓ | ✓ | - |
| | Option Com. (communication) | ET = Multi-Ethernet | ✓ | ✓ | - |
| | | DL = DRIVElink | - | - | - |
| | | X3 = ctrlX CORE | - | - | ✓ |
| * : XCD1, XMD1<br>** : XCD2, XMD2 | | | | | |

### Supply unit (XVE, XVR)

Table 52: Supply unit

| Example: XVR with ctrlX DRIVEplus + ctrlX CORE | | | ctrlX DRIVE | ctrlX DRIVEplus + ctrlX CORE |
|---|---|---|---|---|
| | | | 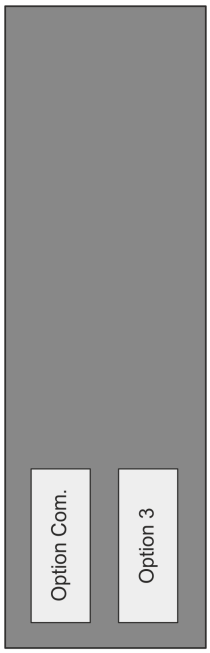  | 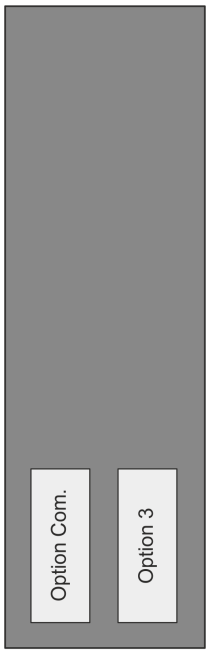  |
| XVE<br>XVR | Option 3 | ET = Multi-Ethernet | - | ✓ |
| | | NN = Not equipped | - | - |
| | Option Com. (communication) | ET = Multi-Ethernet | ✓ | - |
| | | DL = DRIVElink | - | - |
| | | X3 = ctrlX CORE | - | ✓ |

## 9.10.2 ctrlX DRIVE single-axis

Table 53: Connection points

| XCS1, XMS1 | XCS2, XMS2 |
|---|---|
| 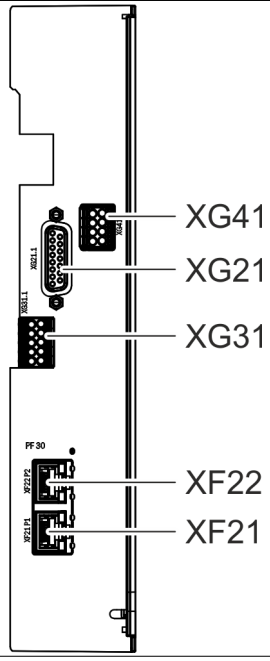 | 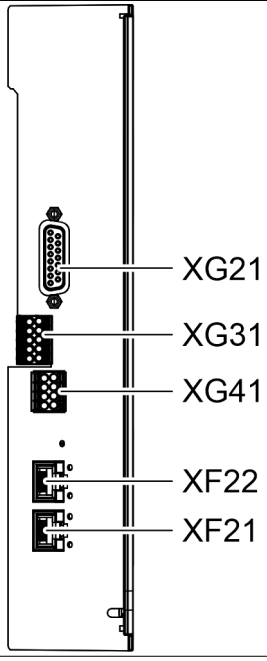 |
| XG21: Multi-encoder; optional<br>XG31: Digital inputs/outputs, analog inputs<br>XG41: Safety technology (Safe Torque Off)<br>XF21, XF22: Communication | |

## 9.10.3 ctrlX DRIVE double-axis

Table 54: Connection points

| XCD1, XMD1 | XCD2, XMD2 |
|---|---|
| 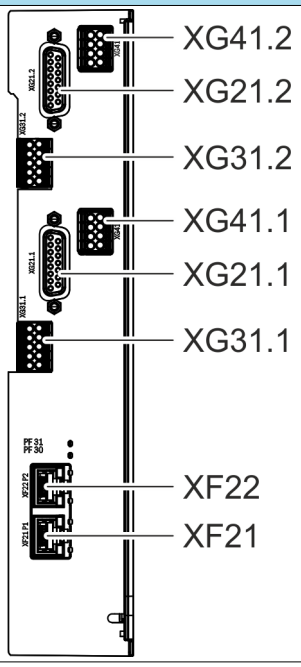 | 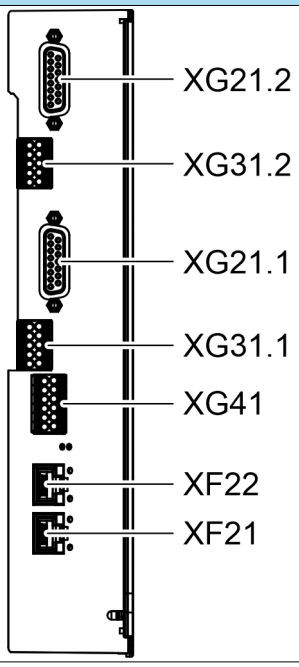 |
| Xxxx.1: Axis 1<br>Xxxx.2: Axis 2<br>XG21: Multi-encoder; optional<br>XG31: Digital inputs/outputs, analog inputs<br>XG41: Safety technology (Safe Torque Off)<br>XF21, XF22: Communication | |

## 9.10.4 ctrlX DRIVEplus single-axis

Table 55: Connection points

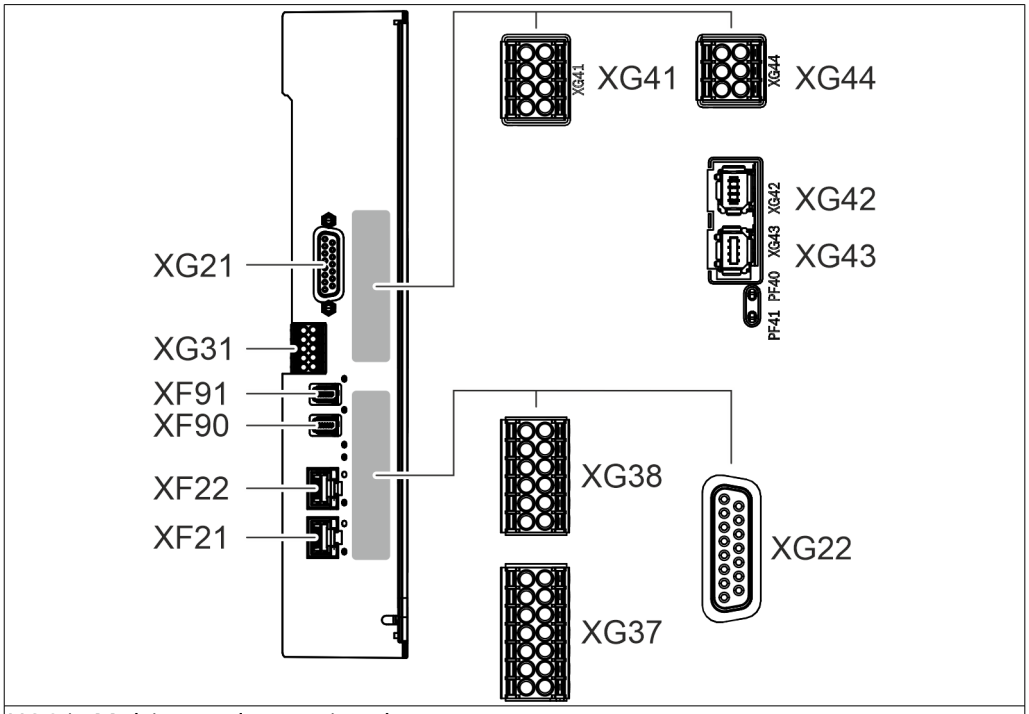


XG21: Multi-encoder; optional
XG31: Digital inputs/outputs, analog inputs
XG41: Safety technology (Safe Torque Off); optional
XG42, XG43, XG44: Safety technology (SafeMotion M5); optional
XF21, XF22: ET communication
XF90, XF91: DL communication
XG37, XG38: I/O extension digital/analog; optional
XG22: Multi-encoder; optional

## 9.10.5 ctrlX DRIVEplus + CORE single-axis

Table 56: Connection points

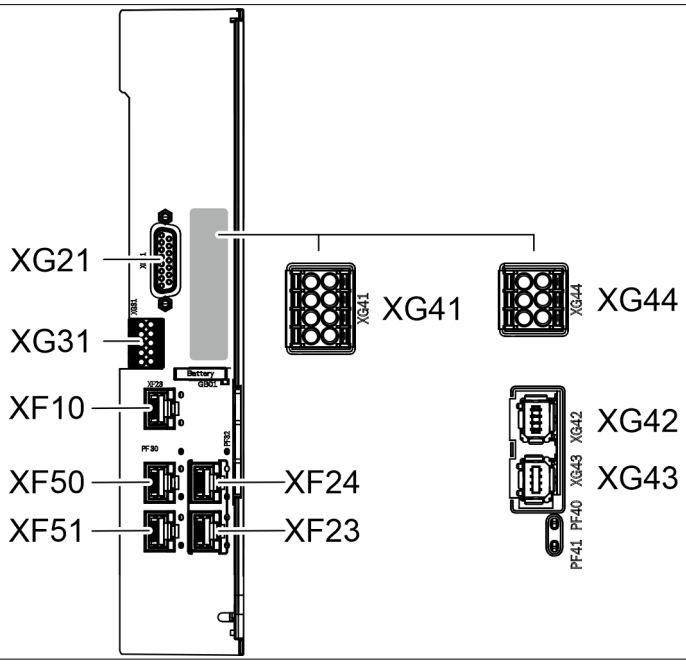


XG21: Multi-encoder; optional
XG31: Digital inputs/outputs, analog inputs
XG41: Safety technology (Safe Torque Off); optional
XG42, XG43, XG44: Safety technology (SafeMotion M5); optional
XF23, XF24: Communication
XF10, XF50, X51: ctrlX DRIVE CORE

## 9.10.6 ctrlX DRIVEplus double-axis

Table 57: Connection points

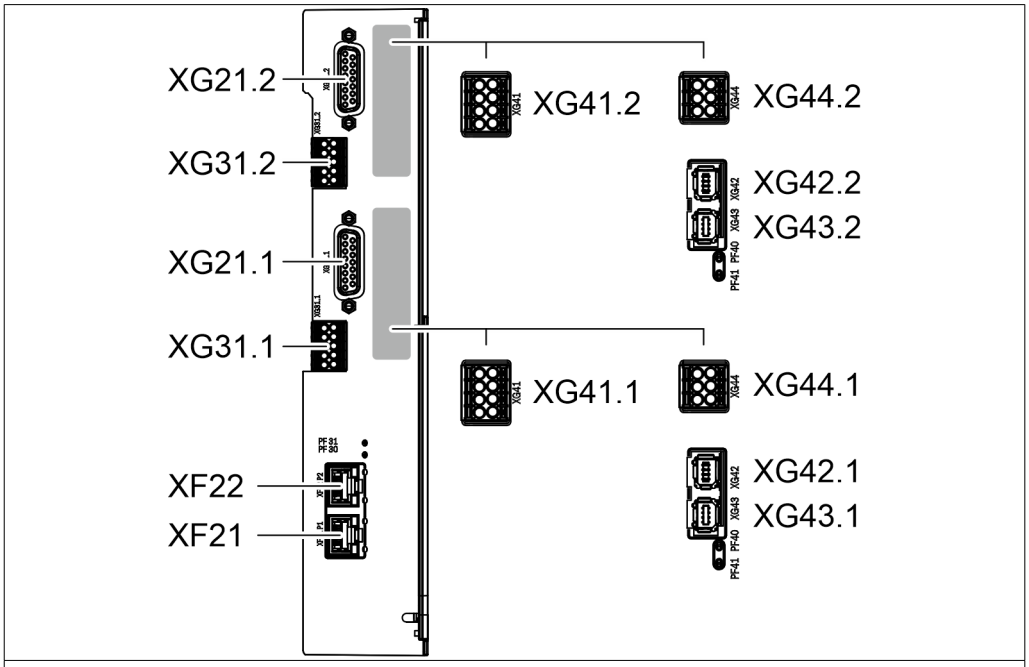


Xxxx.1: Axis 1
Xxxx.2: Axis 2
XG21: Multi-encoder; optional
XG31: Digital inputs/outputs, analog inputs
XG41: Safety technology (Safe Torque Off); optional
XG42, XG43, XG44: Safety technology (SafeMotion M5); optional
XF21, XF22: Communication

## 9.10.7 ctrlX DRIVEplus + CORE double-axis

Table 58: Connection points

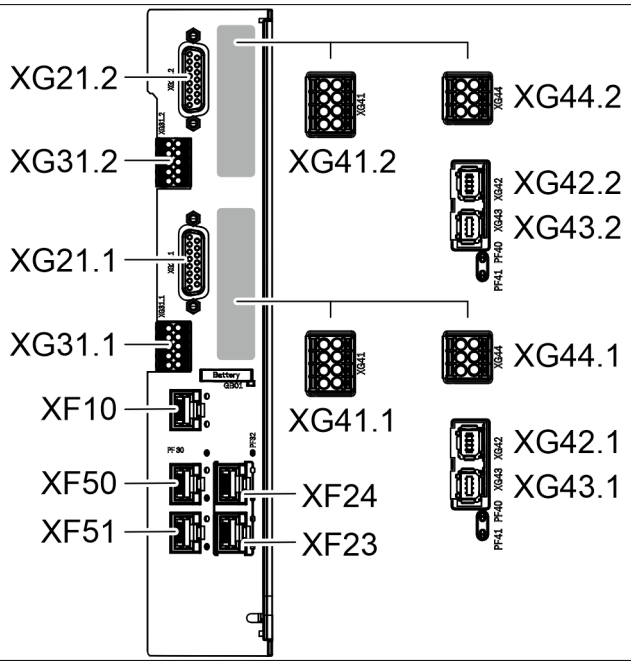


Xxxx.1: Axis 1
Xxxx.2: Axis 2
XG21: Multi-encoder; optional
XG31: Digital inputs/outputs, analog inputs
XG41: Safety technology (Safe Torque Off); optional
XG42, XG43, XG44: Safety technology (SafeMotion M5); optional
XF23, XF24: Communication
XF10, XF50, XF51: ctrlX DRIVE CORE

## 9.10.8 ctrlX DRIVE supply unit

| XVE, XVR |
| --- |
| 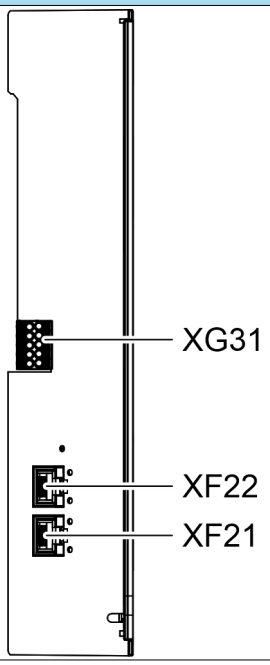  |
| XG31: Digital inputs/outputs, analog inputs<br>XF21, XF22: Communication |

## 9.10.9 ctrlX DRIVEplus + CORE supply unit

| XVE, XVR |
| --- |
| 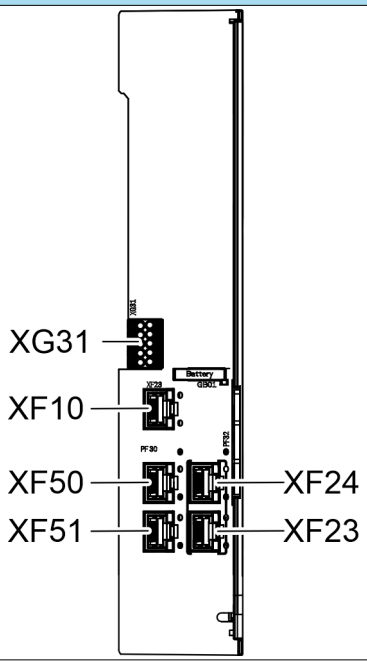  |
| XG31: Digital inputs/outputs, analog inputs<br>XF23, XF24: Communication<br>XF10, XF50, XF51: ctrlX DRIVE CORE |

# 10 Mounting, dismounting and electrical installation

## 10.1 Information on control cabinet mounting

- Observe the **minimum distances** to be complied with for mounting (see technical data or dimensional drawings).
  The specified horizontal minimum distance ($d_{hor}$) refers to the distance to neighboring devices or equipment installed in the control cabinet (such as cable ducts).
  The horizontal distance to the control cabinet wall and to other Rexroth devices (e.g., IndraDrive C, EFC), or to devices of third party manufacturers, has to be ≥ 10 mm.
  If ctrlX DRIVE devices for **central supply** are mounted side by side in the control cabinet, there is no space between the devices.
  If ctrlX DRIVE devices for **individual supply** are mounted side by side in the control cabinet, there is a space of at least 3 mm between the devices (in this case, there is no space between the lateral touch guard plates of the DC bus connections).
- The devices were designed to be mounted in control cabinets. They are mounted with **screws** (M6; tightening torque: 10.4 Nm).
- The device comes with **adhesive labels with safety instructions**. These safety instructions always must remain at the device and be visible. Immediately replace damaged or illegible safety instructions by flawless safety instructions.

## 10.2 Required electric strength of the connected lines

- Lines at connection points XD01, XD02, XD03, XD04, XD10, XG03, XZ03:
  - Dielectric strength according to basic insulation
  - Operational voltage designed for mains voltage and DC bus voltage (conductor-conductor: 500 VAC, conductor-ground: 300 VAC)
- Lines at connection points XG and XF:
  - Operational voltage of the corresponding control signal or communication signal
  - Lines run on the left or right side of the device have to be run at a minmimum distance of $d_{hor}$ ≥ 10 mm to the device.
    If this minimum distance is fallen below, these lines have to be laid out for the mains and DC bus voltage.

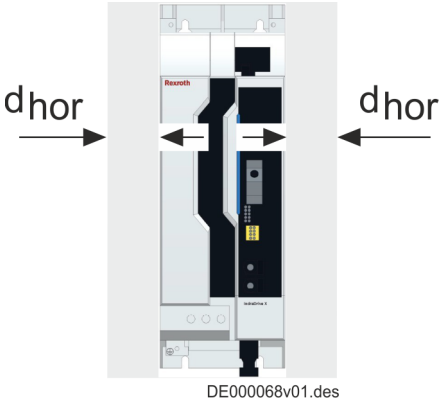


Fig. 23: $d_{hor}$: Horizontal distance

## 10.3 Mounting positions of components

| NOTICE | **Risk of damage of components!**<br>Only operate components in their intended mounting positions. |
|---|---|

### Allowing mounting position of components

Only the mounting position **G1** is allowed for ctrlX DRIVE components.

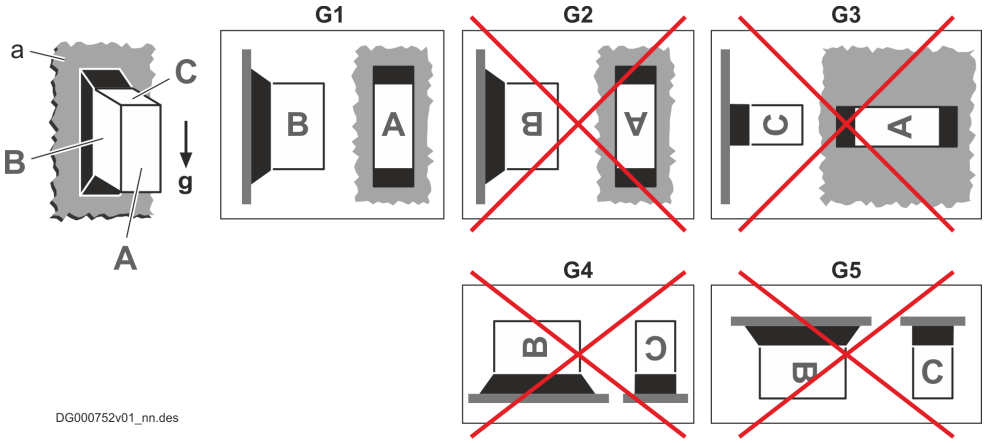


Fig. 24: Allowing mounting position of components

| | |
|---|---|
| A, B, C | Sides of a component: A = front, B = left or right side, C = top |
| a | Mounting surface in the control cabinet |
| g | Direction of gravity |
| G1 | **Standard mounting position:** The natural convection supports the forced cooling air stream. Heat pockets in the component are avoided. |
| G2 | 180° to the standard mounting position |
| G3 | 90° to the standard mounting position |
| G4 | Ground erection; seating on the bottom of the control cabinet |
| G5 | Ceiling suspension; seating at the ceiling of the control cabinet |

## 10.4 Coldplate

Table 59: Required Coldplate properties:

| Designation | Unit | Value |
|---|---|---|
| Surface temperature | °C | ≤ 60 |
| Surface planeness | mm | ≤ 0.1 |
| Surface roughness | - | ≤ Rz 6.3 |
| Surface condition | • free from any kind of dirt (dust, grease, adhesions, etc.)<br>• dry | |

The **dimensional drawings** of the Coldplate devices show the areas of heat-producing power modules.

Coldplate devices are supplied with a **protective foil**.

Before mounting the device, remove the protective foil:

To do this, completely pull off the protective foil, slowly and smoothly at an angle > 90°.

**Check** the **surface** for damage and dirt.

Clean the surface if dirty.

Damaged surface: Contact Rexroth.

## 10.5 Housing dimensions

### 10.5.1 XCS

XCS*-W0010, -W0023

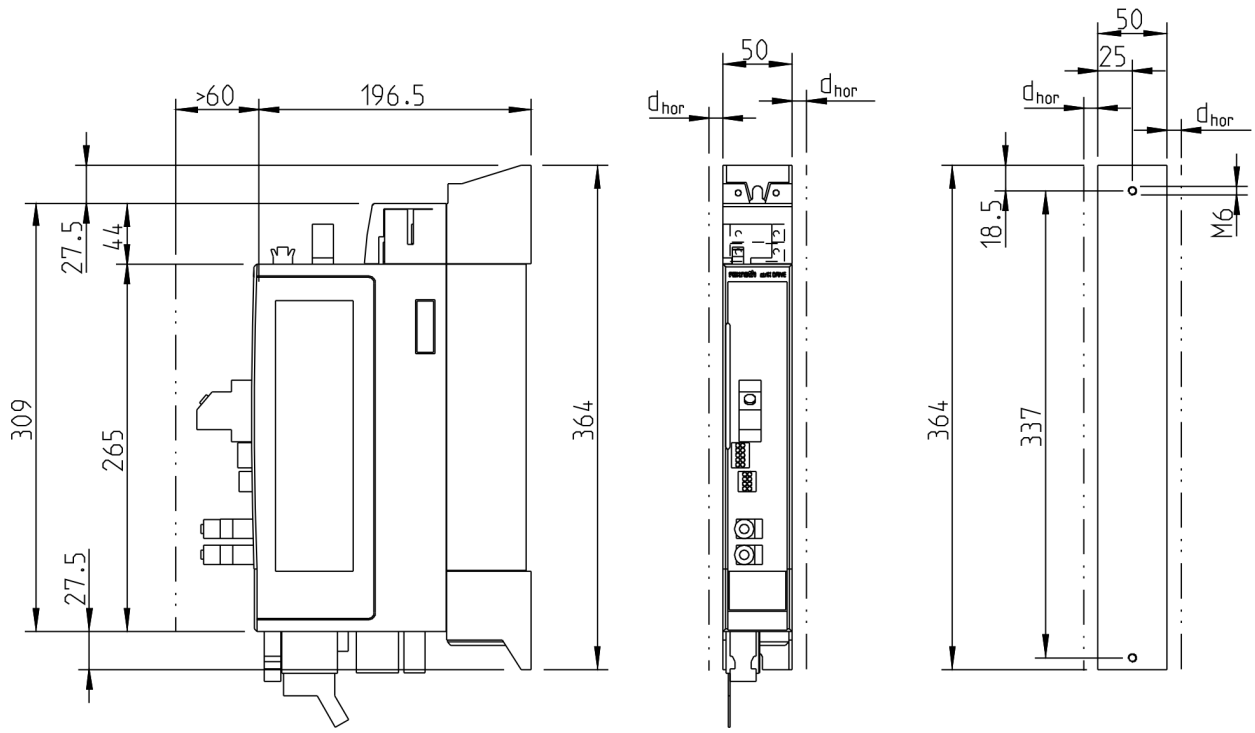


$d_{hor}$ ➦Chapter 7.1 Drive controllers on page 71

## XCS*-W0054, -W0070

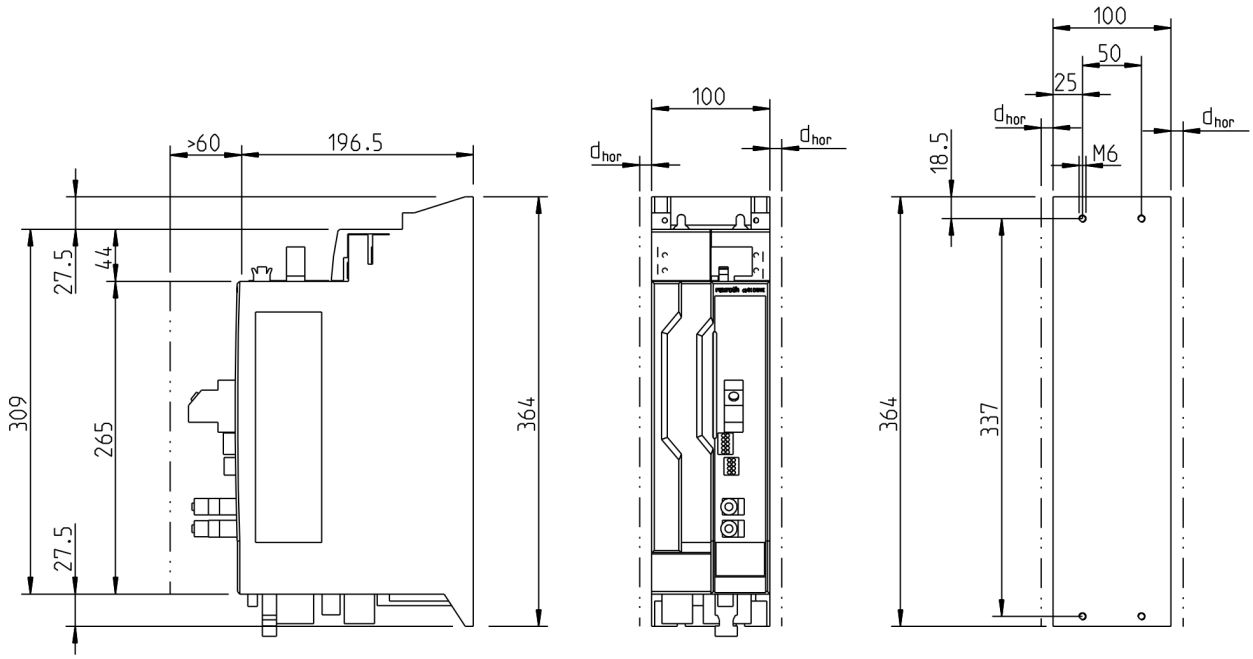


$d_{hor}$ ➡ Chapter 7.1 Drive controllers on page 71

## XCS*-W0090

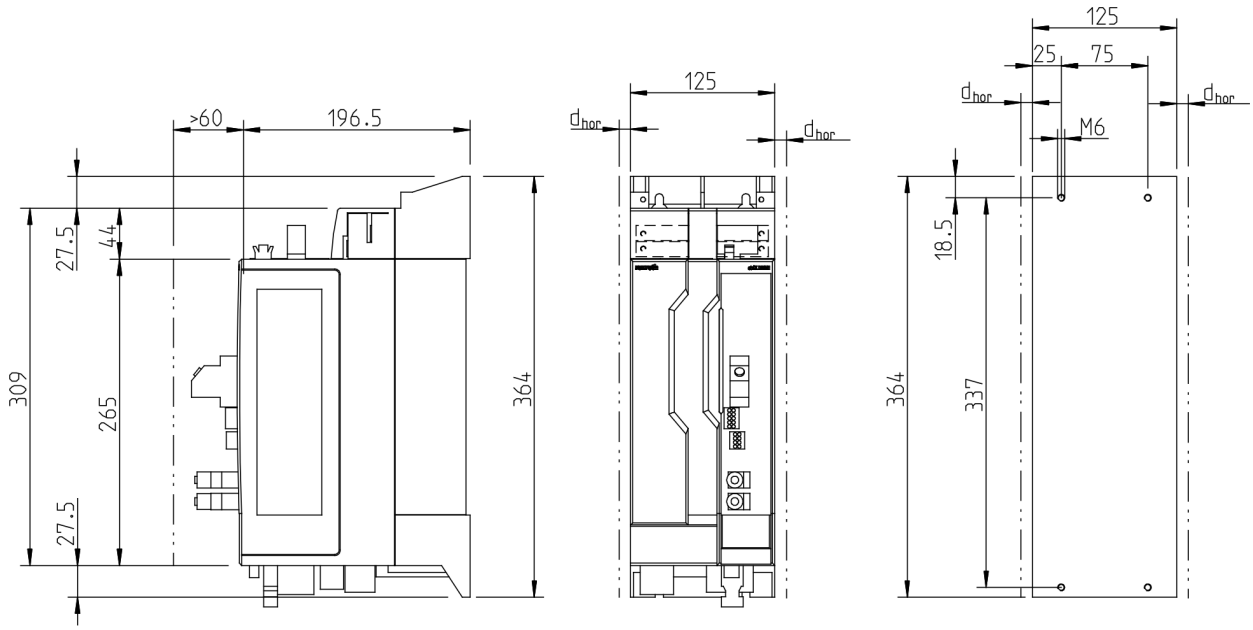


$d_{hor}$ ➡ Chapter 7.1 Drive controllers on page 71

XCS*-W0100, -W0120

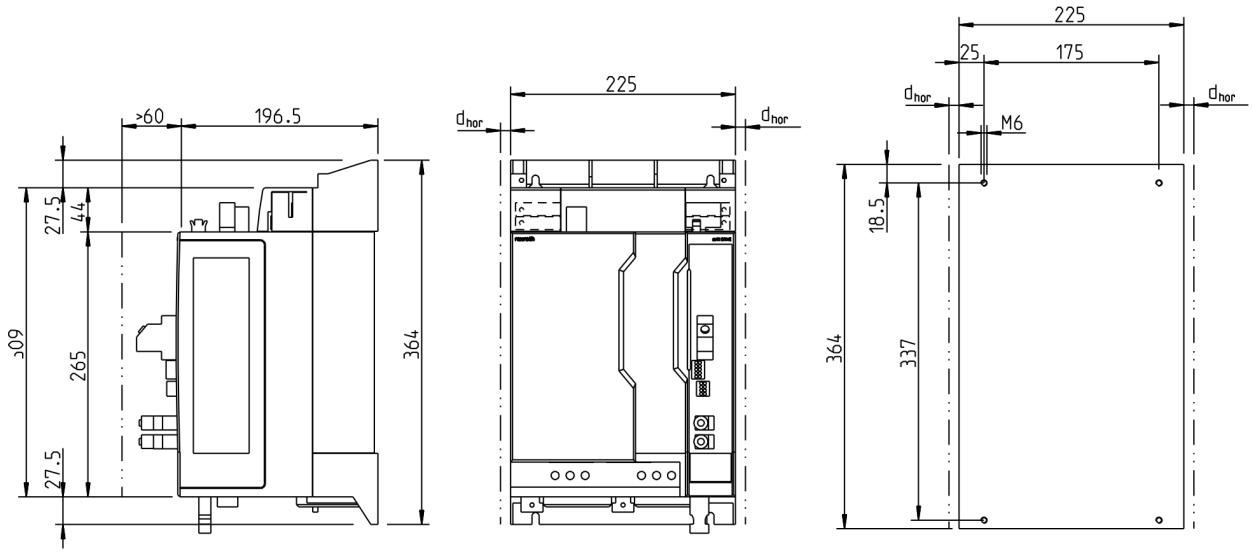


$d_{hor}$ ➦Chapter 7.1 Drive controllers on page 71

XCS*-W0150, -W0180

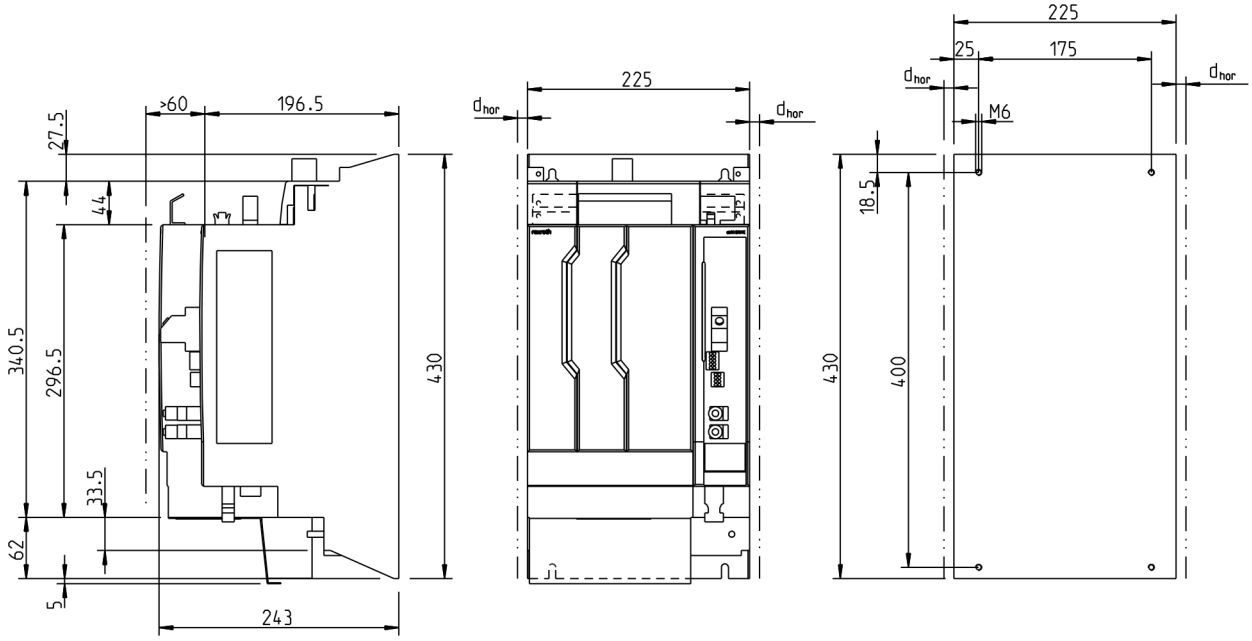


$d_{hor}$ ➦Chapter 7.1 Drive controllers on page 71

XCS*-W0210, -W0250, -W0280, -W0330, -W0375

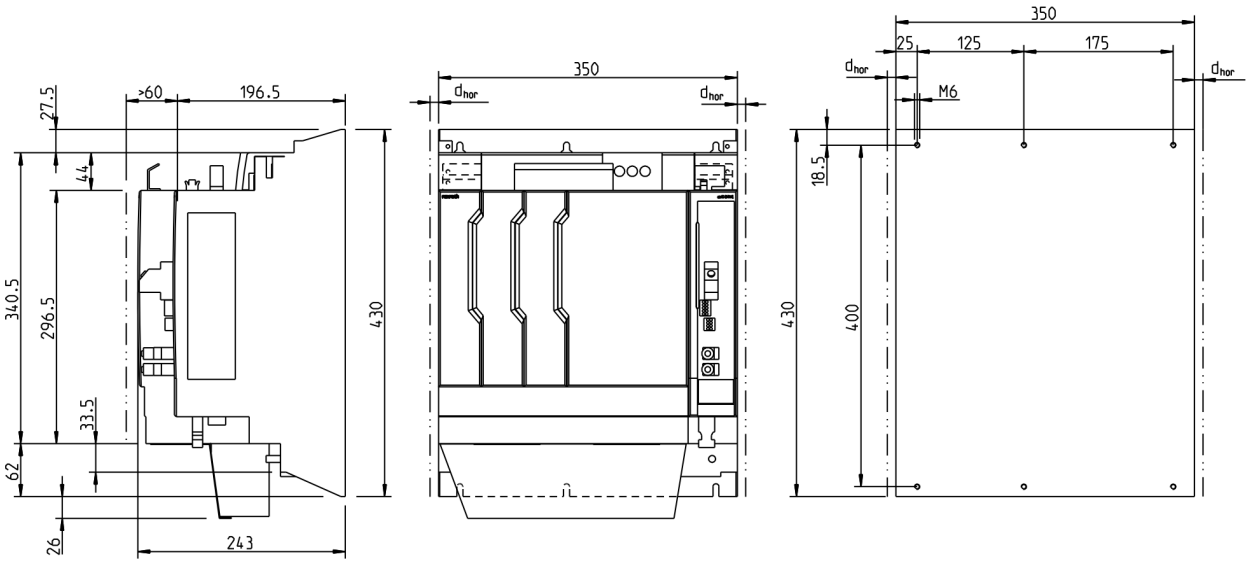


$d_{hor}$ ➡ Chapter 7.1 Drive controllers on page 71

## 10.5.2 XCD

XCD*-W2323

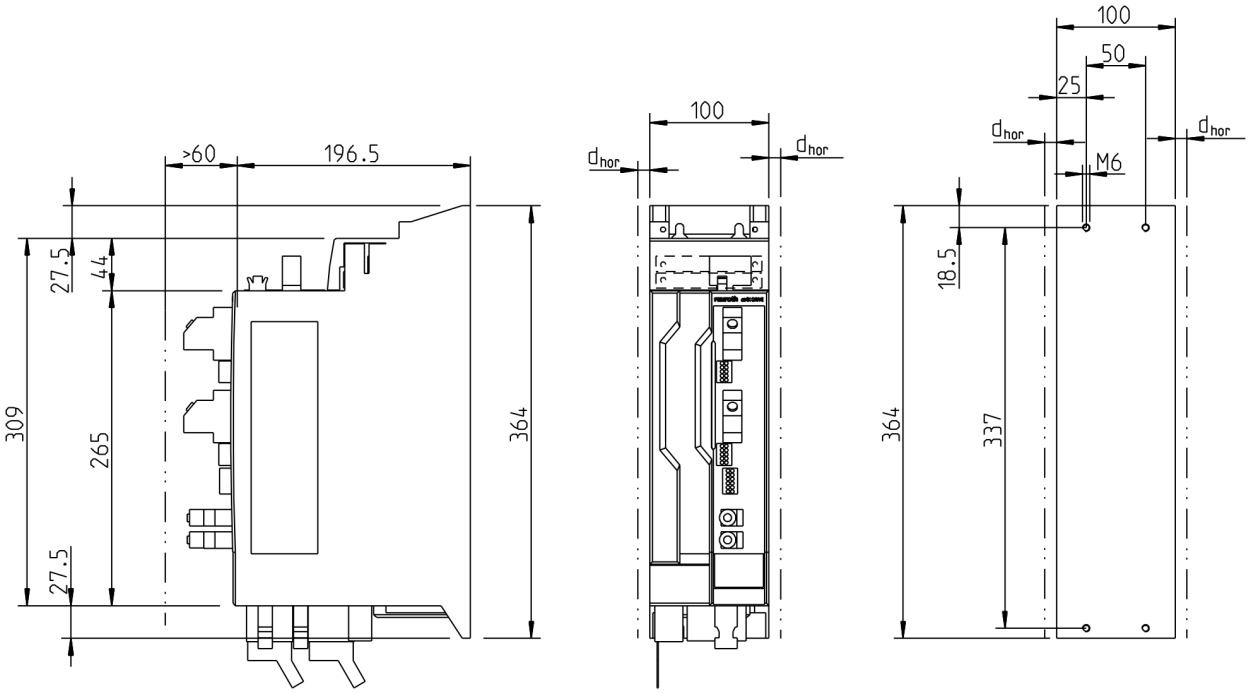


$d_{hor}$ ➡ Chapter 7.1 Drive controllers on page 71

### 10.5.3 XMS

XMS*-W0006 ... W0036

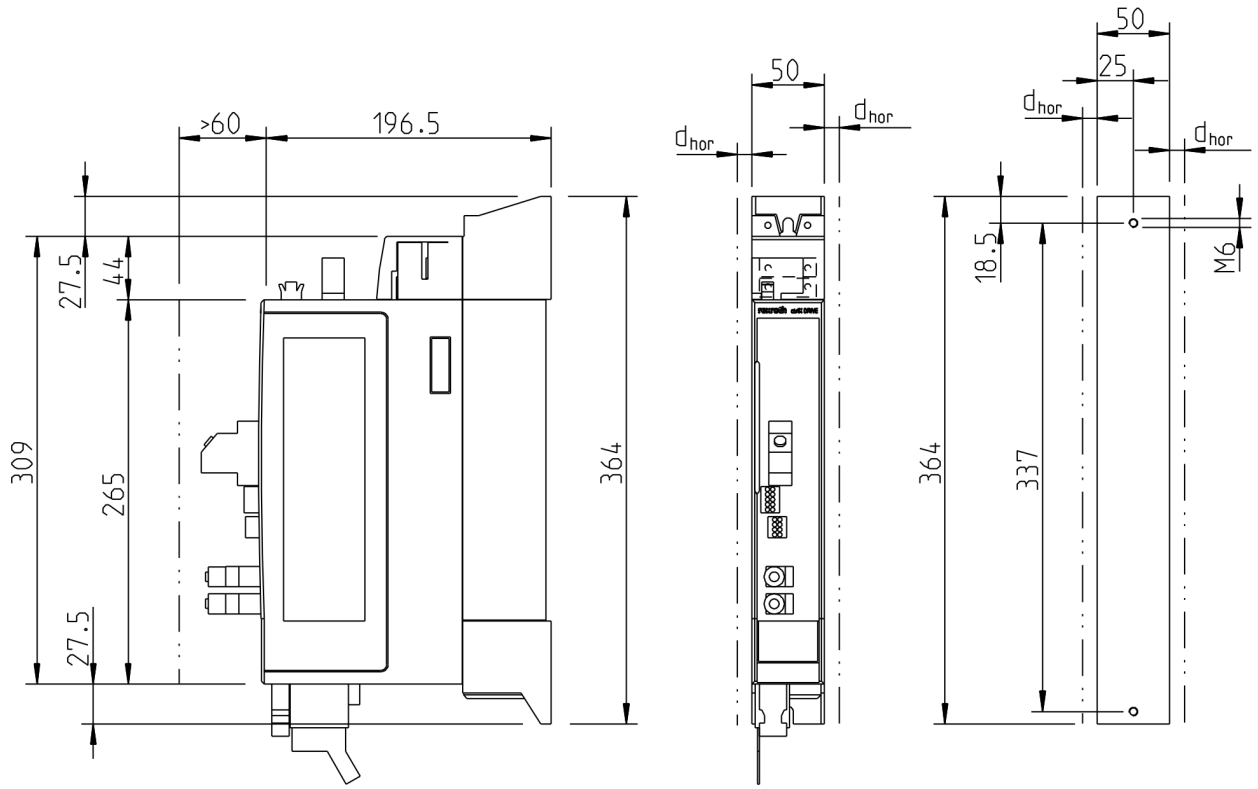


$d_{hor}$ ➦Chapter 7.1 Drive controllers on page 71

XMS*-W0054 ... W0090

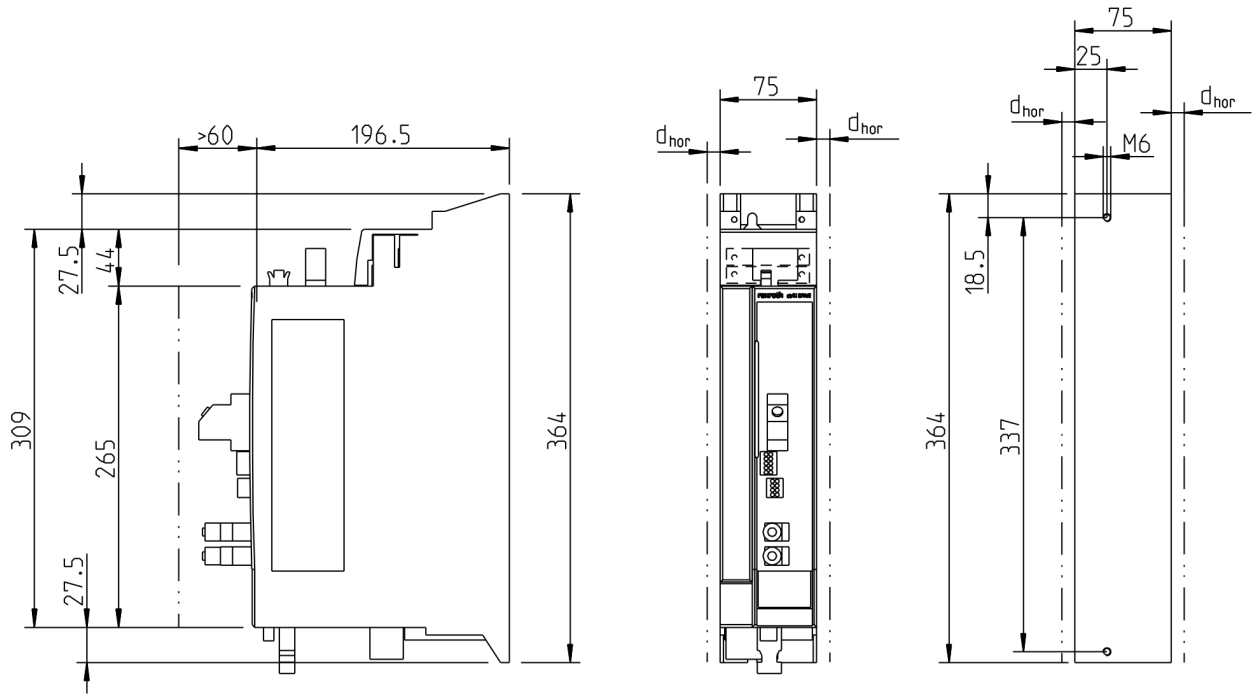


$d_{hor}$ ➦Chapter 7.1 Drive controllers on page 71

## XMS*-W0100/-W0120

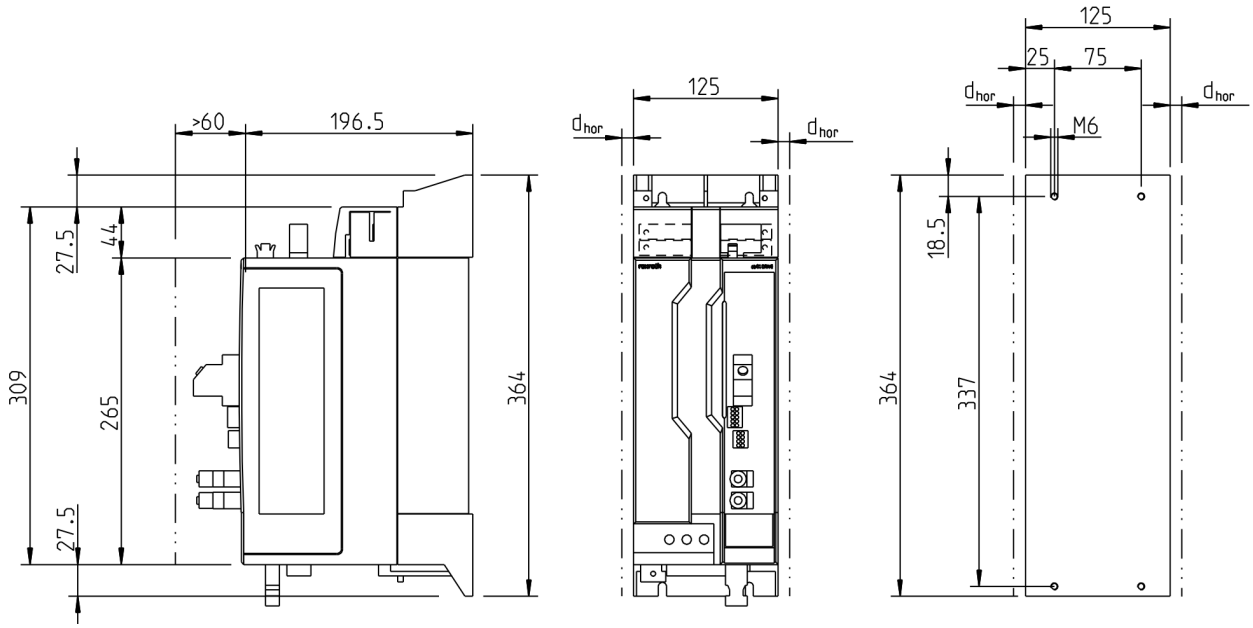


$d_{hor}$ ➡ Chapter 7.1 Drive controllers on page 71

## XMS*-W0150/-W0180

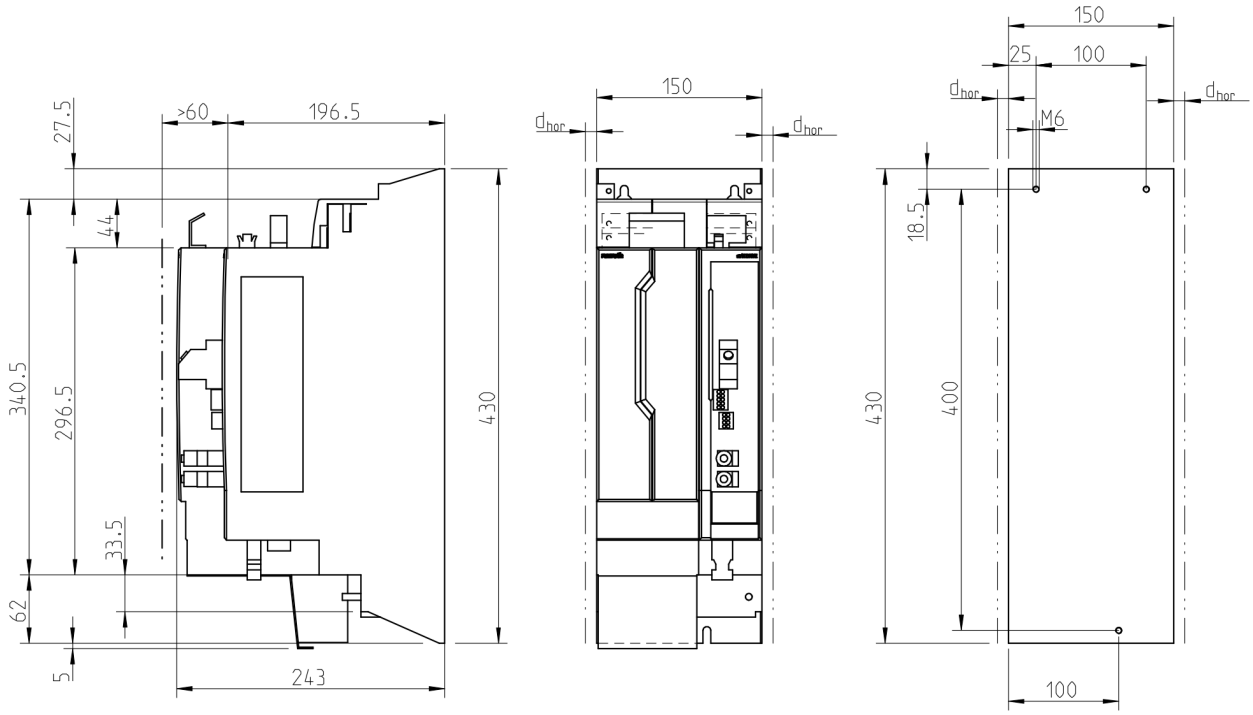


$d_{hor}$ ➡ Chapter 7.1 Drive controllers on page 71

## XMS*-W0210 ... W0280

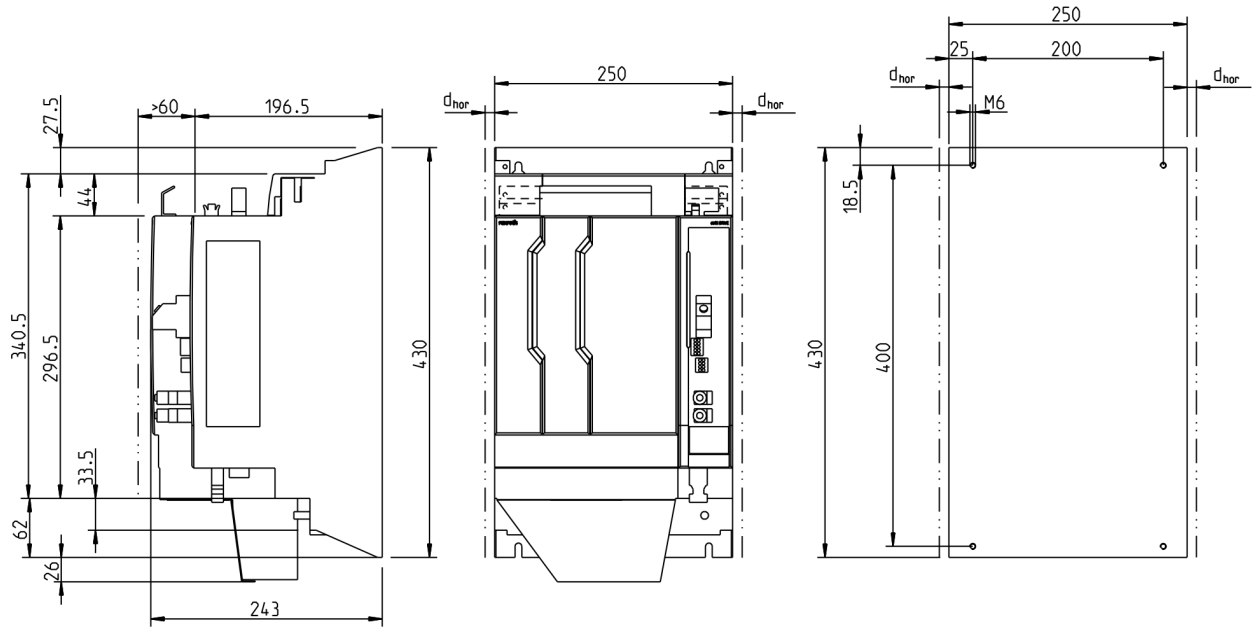


$d_{hor}$ ➦Chapter 7.1 Drive controllers on page 71

## XMS*-C0210 ... C0280

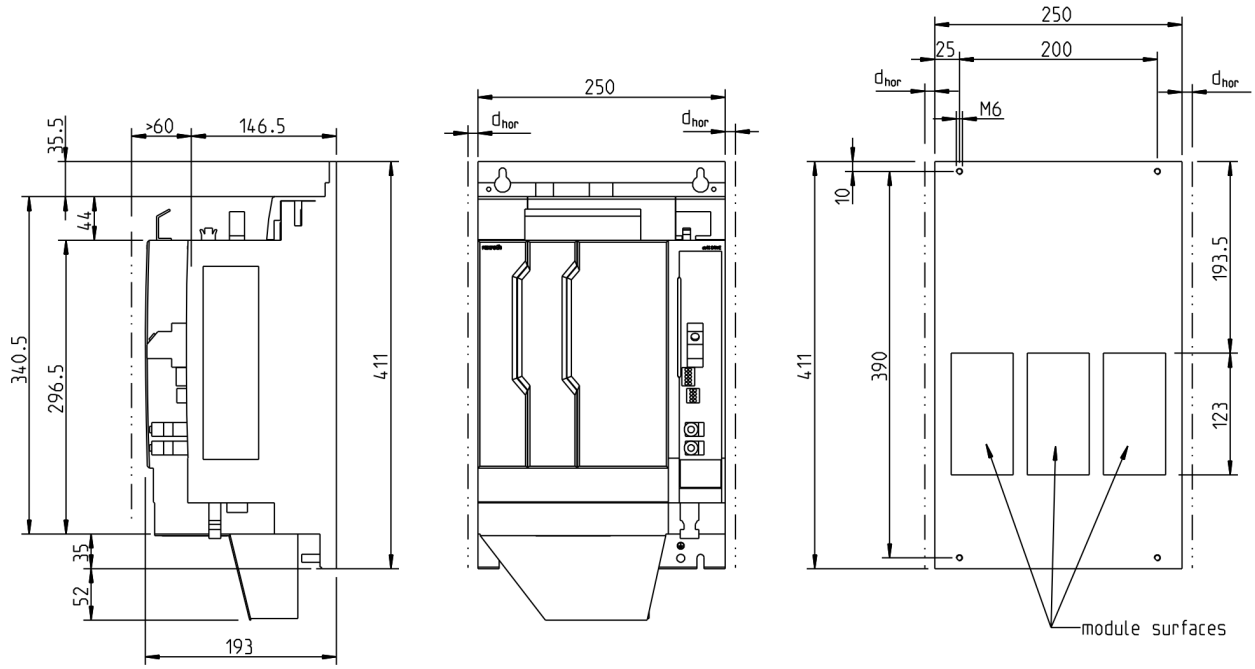


| | |
|---|---|
| $d_{hor}$ | ➦Chapter 7.1 Drive controllers on page 71 |
| module surfaces | Areas of heat-producing power modules |
| Coldplate | ➦Chapter 10.4 Coldplate on page 139 |

## 10.5.4 XMD

### XMD*-W0606 ... W2323

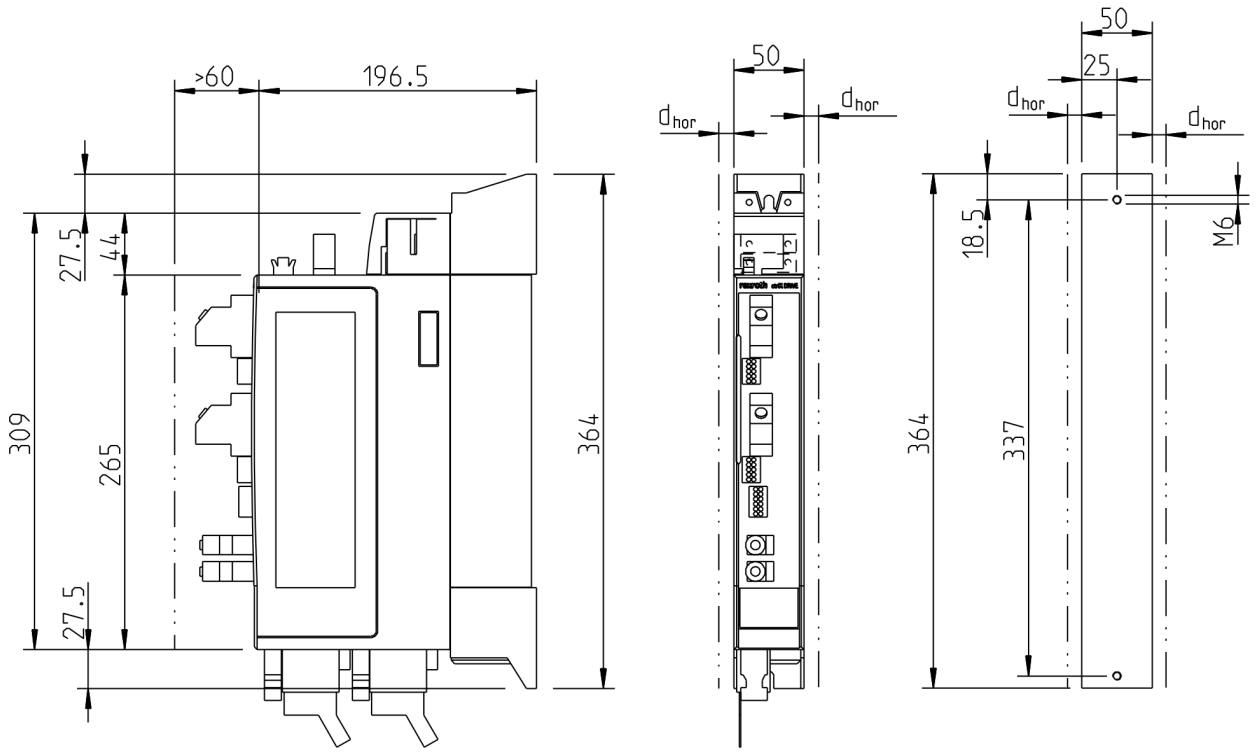


$d_{hor}$ ➡ Chapter 7.1 Drive controllers on page 71

### XMD*-W3030/-W3636

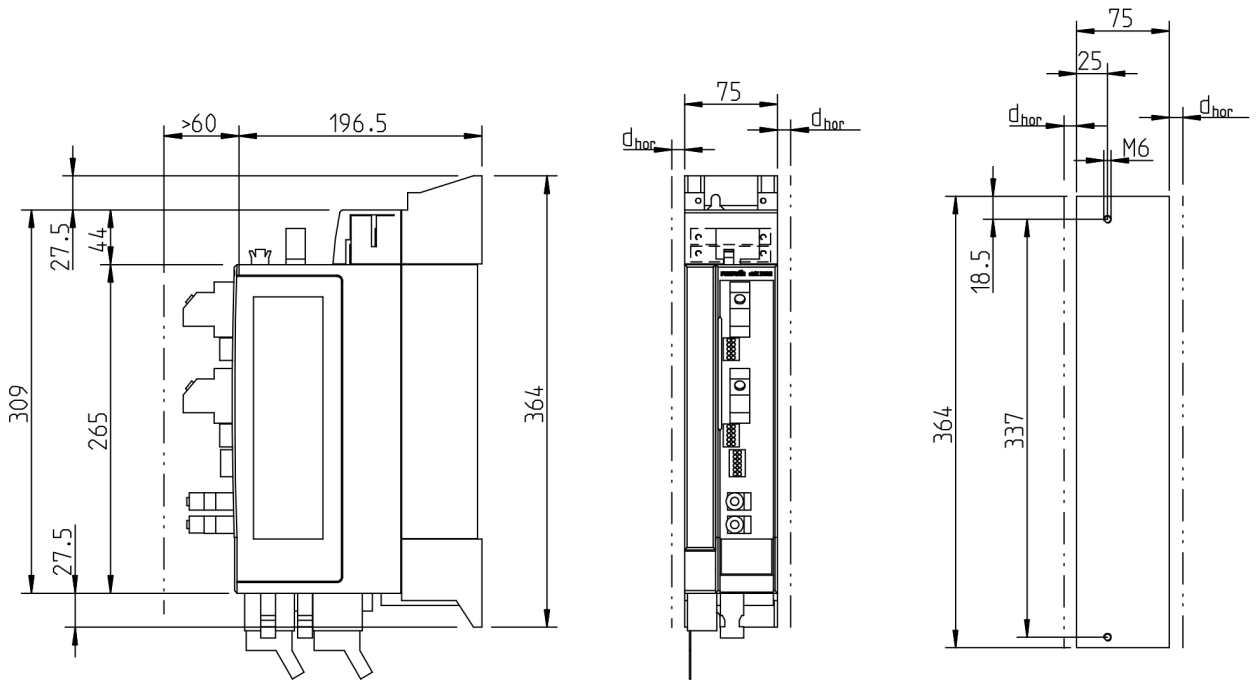


$d_{hor}$ ➡ Chapter 7.1 Drive controllers on page 71

XMD*-W5454/-W7070

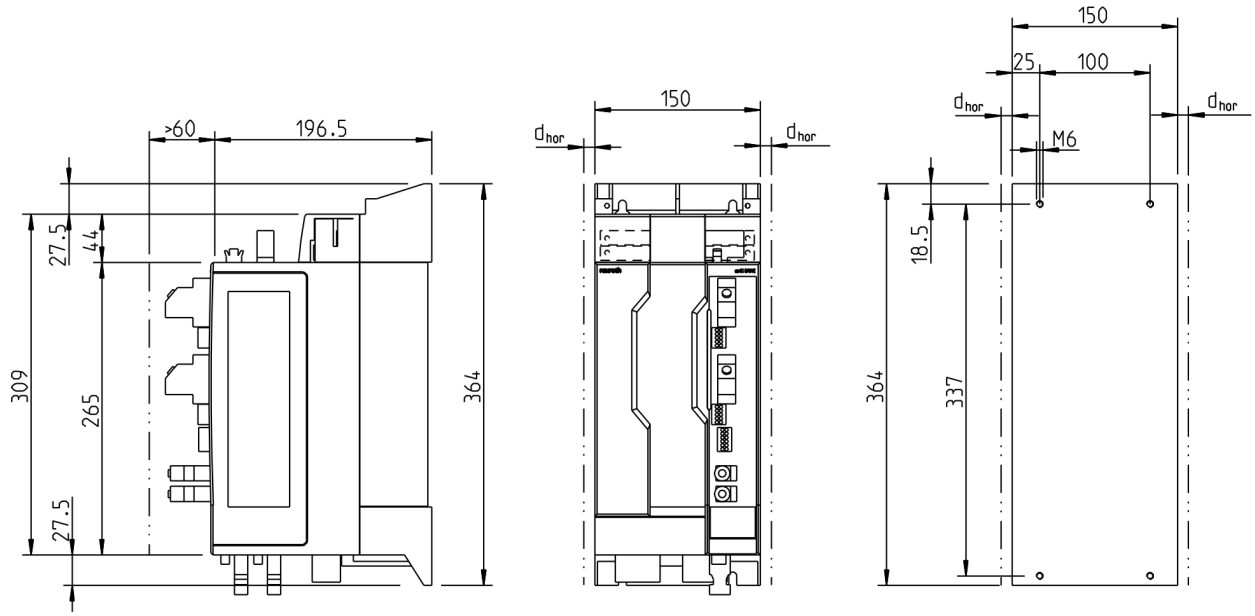


$d_{hor}$ ➦Chapter 7.1 Drive controllers on page 71

### 10.5.5 XMQ

XMQ*-WQ001

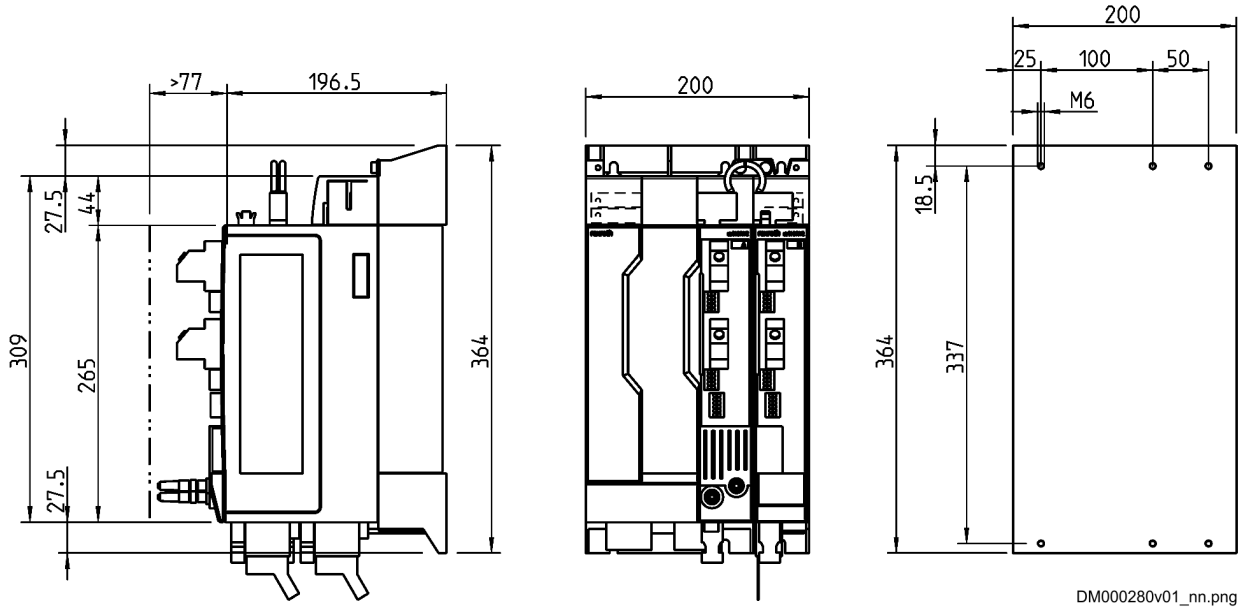


$d_{hor}$ ➦Chapter 7.1 Drive controllers on page 71

XMQ*-WQ002

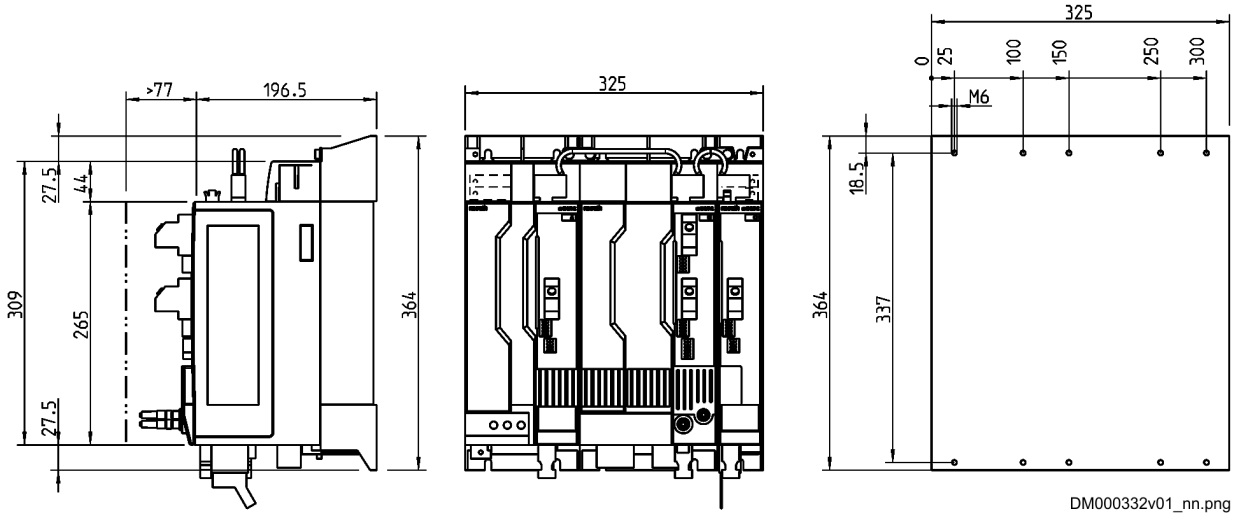


$d_{hor}$ ➡ Chapter 7.1 Drive controllers on page 71

### 10.5.6 XVR

XVR*-W0019

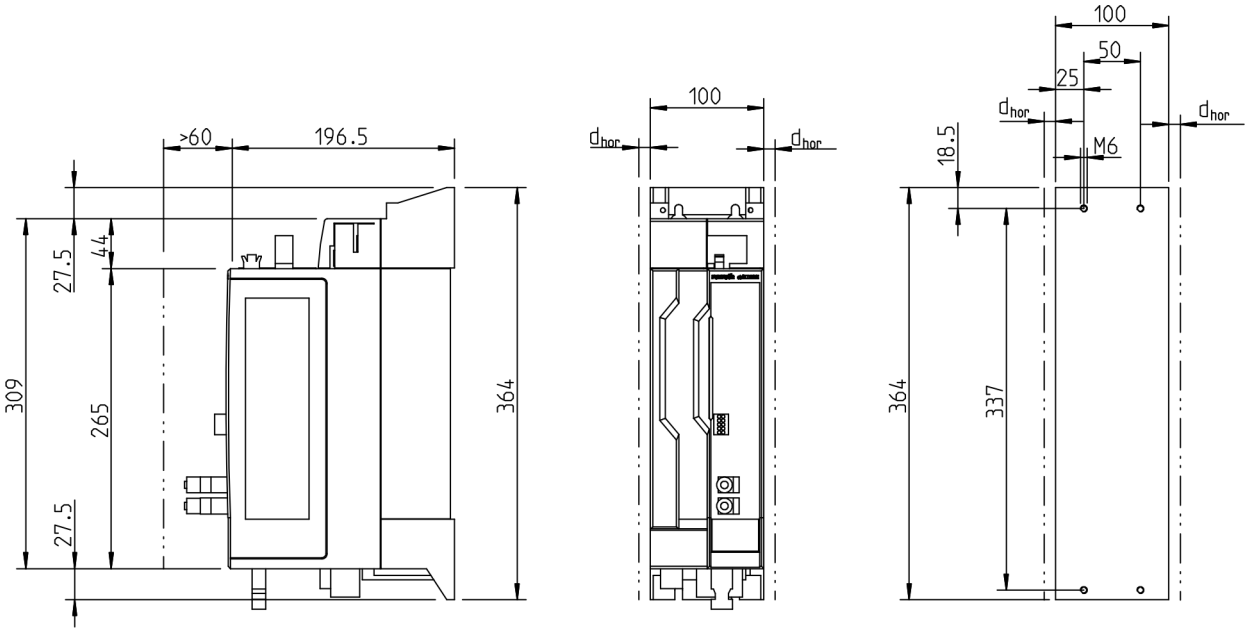


$d_{hor}$ ➡ Chapter 7.1 Drive controllers on page 71

## XVR*-W0048

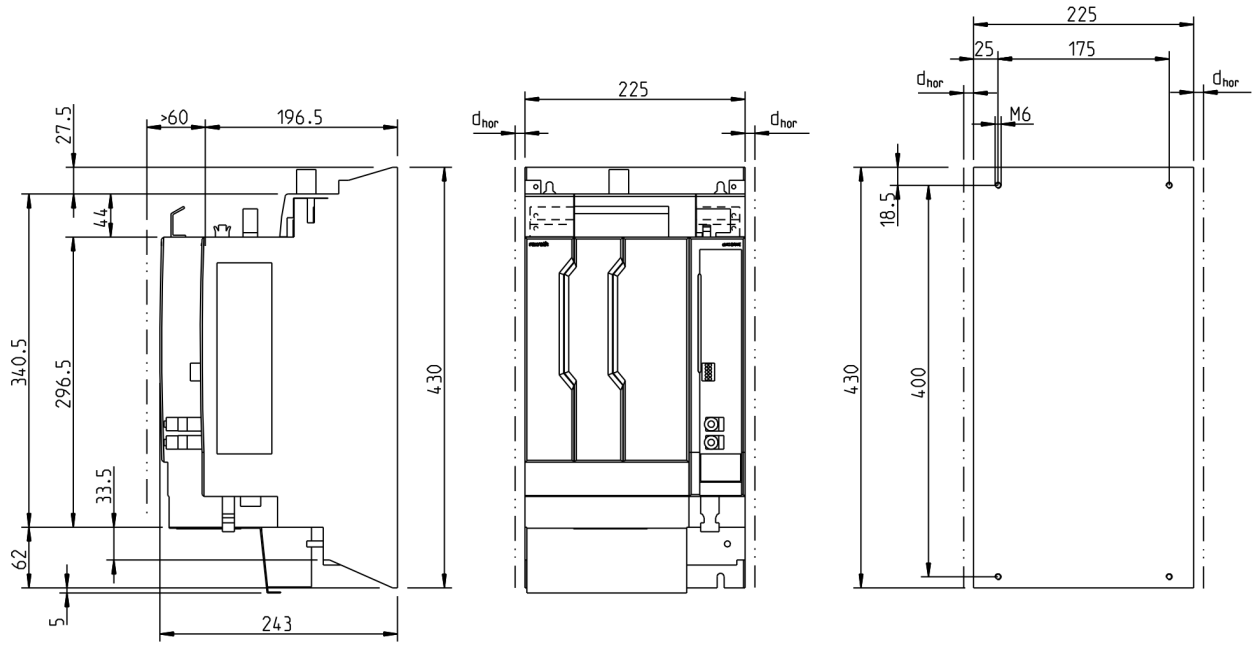


$d_{hor}$ ➦Chapter 7.1 Drive controllers on page 71

## XVR*-W0072

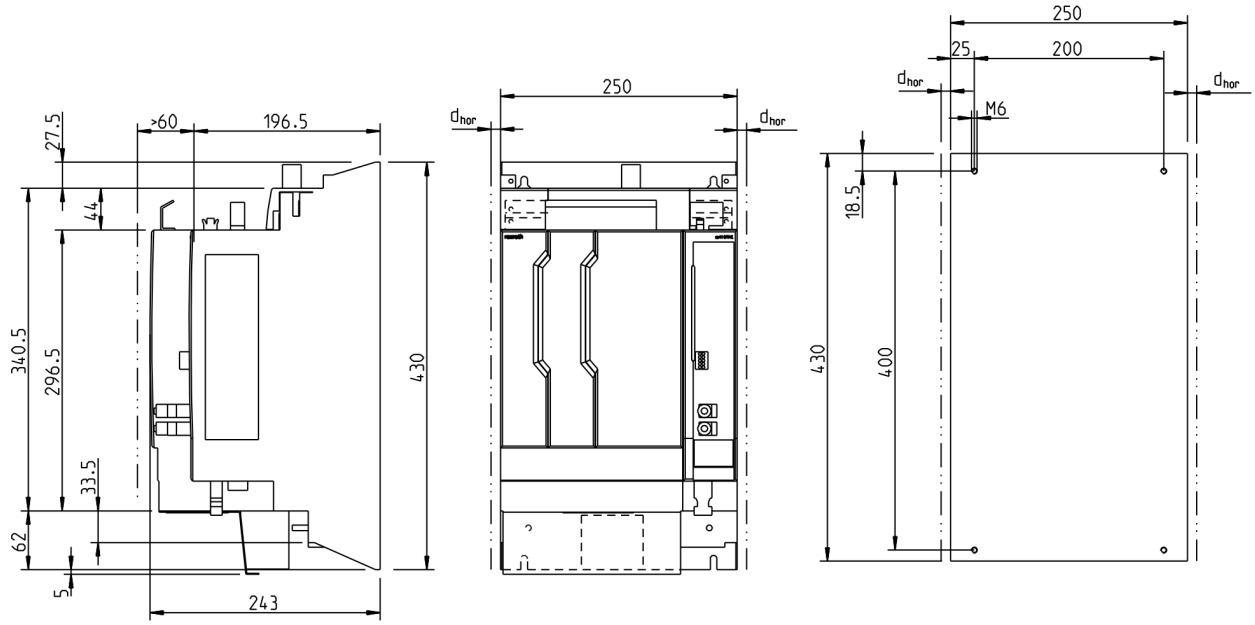


$d_{hor}$ ➦Chapter 7.1 Drive controllers on page 71

XVR*-W0100

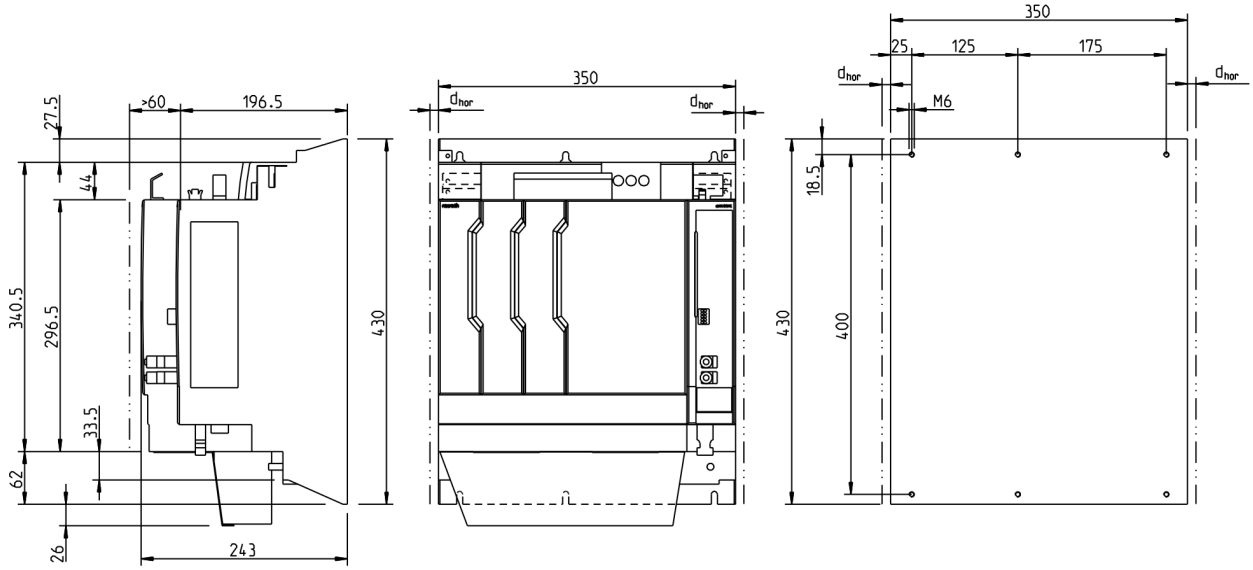


$d_{hor}$ ➡ Chapter 7.1 Drive controllers on page 71

## 10.5.7 XVE

XVE*-W0030

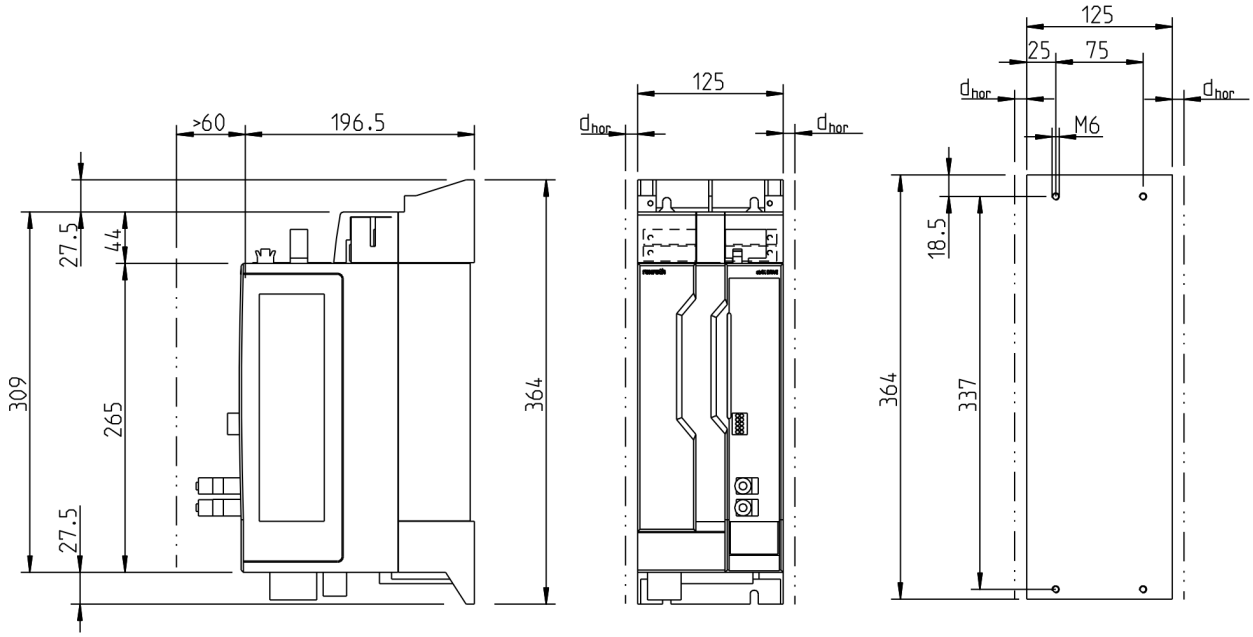


$d_{hor}$ ➡ Chapter 7.1 Drive controllers on page 71

## XVE*-W0075

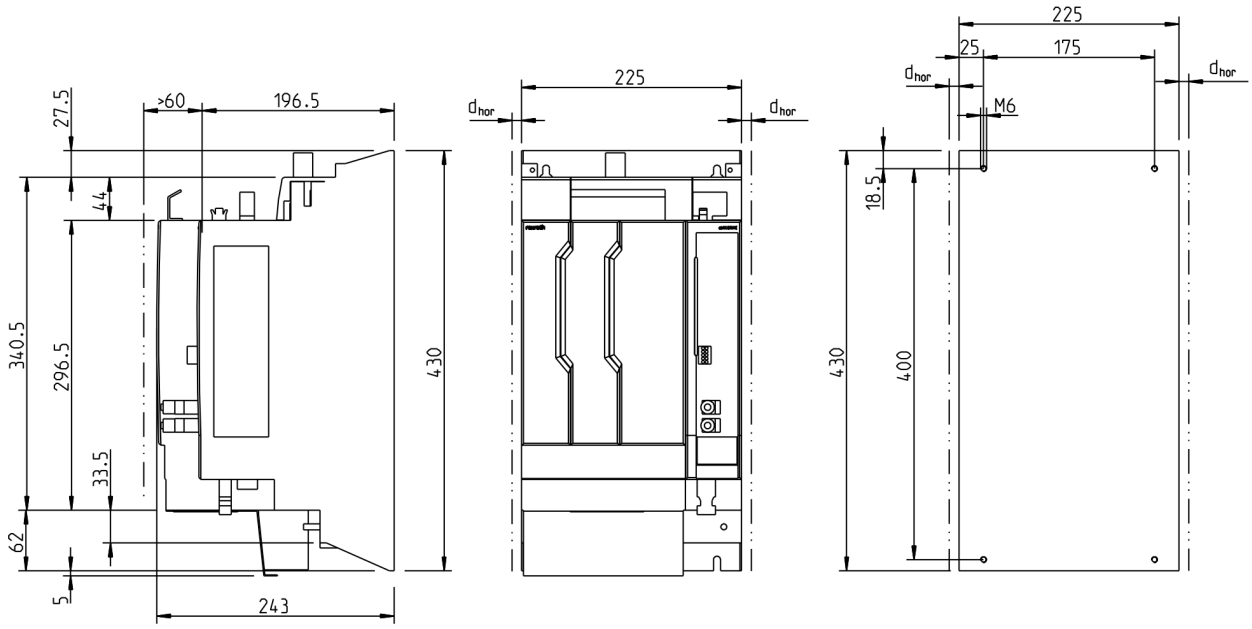


$d_{hor}$ ➦Chapter 7.1 Drive controllers on page 71

## XVE*-W0125

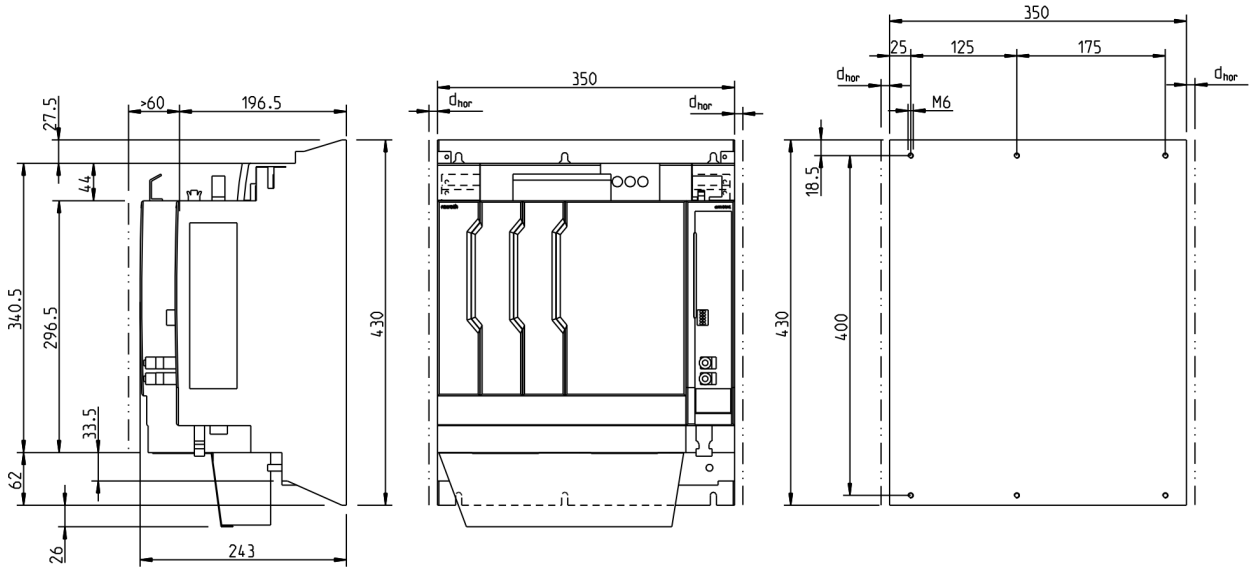


$d_{hor}$ ➦Chapter 7.1 Drive controllers on page 71

## 10.6 Dismounting

### 10.6.1 Dismounting steps

| ⚠ WARNING | **Lethal electric shock from live parts with more than 50 V!**<br>Before working with live parts: De-energize installation and secure power switch against unintentional or unauthorized reconnection.<br>Wait at least **30 minutes** after switching off the supply voltages to allow **discharging**.<br>Make sure voltage has fallen below 50 V before touching live parts! |
|---|---|

Observe the discharge time before you start dismounting the device.

## 10.7 Electrical installation

### 10.7.1 General information on how to install the drive controller

| ⚠ WARNING | **Lethal electric shock from live parts with more than 50 V!**<br>Before working with live parts: De-energize installation and secure power switch against unintentional or unauthorized reconnection.<br>Wait at least **30 minutes** after switching off the supply voltages to allow **discharging**.<br>Make sure voltage has fallen below 50 V before touching live parts! |
|---|---|

Damage may be caused to the drive controller or circuit boards if electrostatic charging present in people and/or tools is discharged across them. Therefore, please observe the following information:

| *NOTICE* | **Electrostatic charges may cause damage to electronic components and interfere with their operational safety!**<br>Exposed conductive parts coming into contact with components and circuit boards have to be discharged by means of grounding. Otherwise, errors may occur when controlling motors and moving parts. |
|---|---|

Such exposed conductive parts include:

- the soldering iron (when soldering)
- the human body (grounding by touching a conductive, grounded object)
- parts and tools (place them on a conductive surface)

Endangered components may only be stored or dispatched in conductive packaging.

Rexroth connection diagrams are only to be used for generating system circuit diagrams! The machine manufacturer's system circuit diagrams must be used for wiring the system!

- Run signal lines separately from the load resistance lines due to the occurrence of interference.
- Transmit analog signals (e.g., command values, actual values) via shielded lines.
- Do not connect mains, DC bus or power cores to low voltages nor allow them to come into contact with low voltages.
- When carrying out a high voltage test or an applied-overvoltage withstand test on the machine's electrical equipment, disconnect all connections to the devices. This protects the electronic components (allowed in accordance with EN 60204-1). During their routine testing, Rexroth drive components are tested for high voltage (in accordance with EN 61800-5-1:2007, section 5.2.3.2) and insulation (in accordance with EN 60204-1:2006, section 18.3).

| NOTICE | **Risk of damage to the drive controller by connecting and disconnecting live connections!**<br>Do not connect and disconnect live connections. |
|---|---|



## 10.7.2 EMC measures for design and installation

### Rules for design of installations with drive controllers in compliance with EMC

The following rules are the basics for designing and installing drives in compliance with EMC.

#### Mains filter

Use an appropriate mains filter recommended by Rexroth for radio interference suppression in the supply feeder of the drive system.

#### Control cabinet grounding

Connect all metal parts of the cabinet with one another over the largest possible surface area to establish a good electrical connection. This, too, applies when mounting the mains filter. If required, use serrated washers which cut through the paint surface. Connect the cabinet door to the control cabinet using the shortest possible grounding straps.

#### Line routing

Avoid coupling routes between lines with a high potential of noise and noise-free lines. Therefore, signal, mains and motor lines and power cables have to be routed separately from another. Minimum distance: 10 cm. Provide separating sheets between power and signal lines. Ground separating sheets multiple times.

Lines with a high potential of noise include:

- Lines at the mains connection (incl. synchronization connection)
- Lines at the motor connection
- Lines at the DC bus connection

Generally, interference injections are reduced by routing cables close to grounded sheet steel plates. For this reason, cables and wires should not be routed arbitrarily in the cabinet, but close to the cabinet housing or mounting plates. Separate the incoming and outgoing cables of the radio interference suppression filter.

### Interference suppression elements

Provide the following components in the control cabinet with interference suppression combinations:

- Contactors
- Relays
- Solenoid valves
- Electromechanical operating hours counters

Connect these combinations directly at each coil.

### Twisted wires

Twist unshielded wires belonging to the same circuit (supply and return lines) or keep the surface between supply and return lines as small as possible. Wires that are not used have to be grounded at both ends.

### Lines of measuring systems

Lines of measuring systems have to be shielded. Connect the shield to ground at both ends and over the largest possible surface area. The shield should not be interrupted, e.g., by intermediate terminals.

### Digital signal lines

Ground the shields of digital signal lines at both ends (transmitter **and** receiver) over the largest possible surface area and with low impedance. In the case of bad ground connection between transmitter and receiver, additionally route a bonding conductor (min. 10 $mm^2$). Braided shields are better than foil shields.

### Analog signal lines

Ground the shields of analog signal lines at one end (transmitter **or** receiver) over the largest possible surface area and with low impedance. This avoids low-frequency interference current (in the mains frequency range) on the shield.

### Connecting the mains choke

Keep connection lines of the mains choke at the drive controller as short as possible and twist them.

With regenerative supply units, use shielded lines with the shield grounded at both ends for the connection between supply unit and mains choke.

### Installing the motor power cable

- Use shielded motor power cables or run motor power cables in a shielded duct
- Use the shortest possible motor power cables
- Ground shield of motor power cable at both ends over the largest possible surface area to establish a good electrical connection
- Run motor lines in shielded form inside the control cabinet
- Do not use any steel-shielded lines
- The shield of the motor power cable should not be interrupted by mounted components, such as output chokes, sine filters or motor filters.

## Optimum EMC installation in facility and control cabinet

### General information

For optimum EMC installation, a spatial separation of the interference-free area (mains connection) and the interference-susceptible area (drive components) is recommended, as shown in the figures below.

Recommendation: For optimum EMC installation in the control cabinet, use a separate control cabinet panel for the drive components.

### Division into areas (zones)

Exemplary arrangements in the control cabinet: see section ➦ Control cabinet design according to interference areas - exemplary arrangements , page 156 .

We distinguish three areas:

- Interference-free area of control cabinet **(area A)**:
  This includes:
  - Supply feeder, input terminals, fuse, main switch, mains side of mains filter for drives and corresponding connecting lines
  - Control voltage or auxiliary voltage connection with power supply unit, fuse and other parts unless connection is run via the mains filter of the AC drives
  - All components that are not electrically connected with the drive system
- Interference-susceptible area **(area B)**:
  - Mains connections between drive system and mains filter for drives, mains contactor
  - Interface lines of drive controller
- Strongly interference-susceptible area **(area C)**:
  - Motor power cables including single cores

Never run lines of one of these areas in parallel with lines of another area so that there is no unwanted interference injection from one area to the other and that the filter is jumpered with regard to high frequency. Use the shortest possible connecting lines.

Recommendation for complex systems: Install drive components in one cabinet and the control units in a second, separate cabinet.

Control cabinet doors badly grounded with regard to high frequency may act as antennas. For this reason, connect the control cabinet doors to the cabinet on top, in the middle and on the bottom with short equipment grounding conductors with a cross section of at least 6 $mm^2$ or, even better, with grounding straps of the same cross section. Make sure connection points have good contact.

### Control cabinet design according to interference areas - exemplary arrangements

**Do not operate any additional loads at the mains filter!**

Do not run any other loads at the connection from the mains filter output to the mains connection of the supply unit.

For motor fans and power supply units, for example, use separate mains filters.

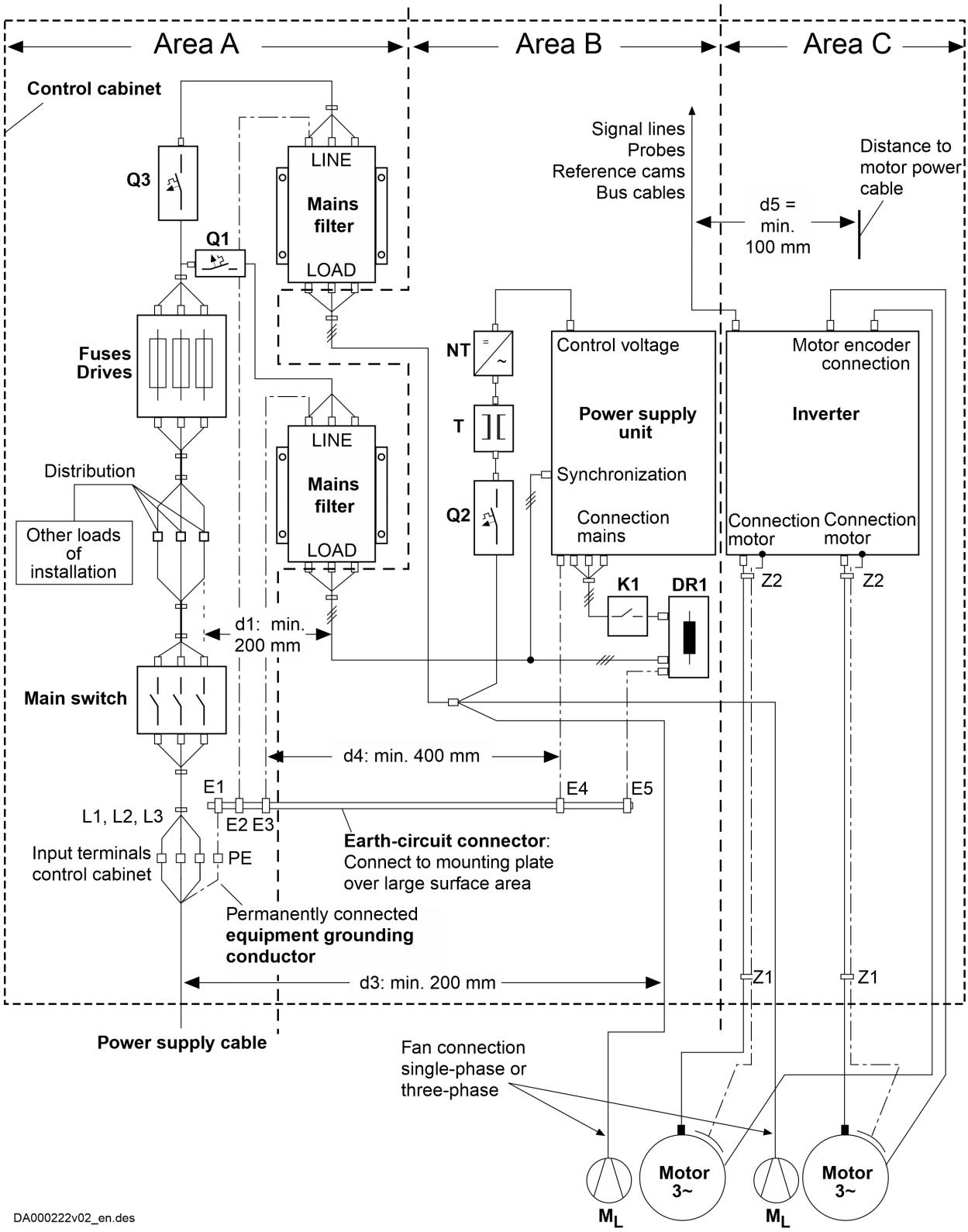


Fig. 25: EMC areas in the control cabinet

| | |
|---|---|
| DR1 | Mains choke; when combined with XVR supply units, the mains choke is integrated in the XLI mains connection module (mains filter/mains choke/ mains contactor) |
| E1...E5 | Equipment grounding conductor of the components |
| K1 | External mains contactor for supply units without integrated mains contactor; when combined with XVR supply units, the mains contactor is integrated in the XLI mains connection module (mains filter/mains choke/ mains contactor) |
| $M_L$ | Motor fan |
| NT | Power supply unit |
| Q1, Q2, Q3 | Fusing |
| T | Transformer |
| Z1, Z2 | Shield connection points for cables |

## Design and installation in area A - control cabinet area free from interference

### Arranging the components in the control cabinet

Comply with recommended distance of at least **200 mm** (distance d1 in the figure):

- Between components and electrical elements (switches, pushbuttons, fuses, terminal connectors) in interference-free area A and the components in the two other areas B and C

Comply with recommended distance of at least **400 mm** (distance d4 in the figure):

- Between magnetic components (such as transformers, mains chokes and DC bus chokes that are directly connected to the power connections of the drive system) and the interference-free components and lines between mains and filter including the mains filter in area A

If these distances are not complied with, the magnetic leakage fields are injected to the interference-free components and lines connected to the mains, and the limit values at the mains connection are exceeded in spite of the installed filter.

### Cable routing of interference-free lines to the mains connection

Comply with recommended distance of at least **200 mm** (distances d1 and d3 in the figure):

- Between supply feeder or lines between filter and exit point from the control cabinet in area A and the lines in areas B and C

If this is impossible, there are two alternatives:

- Install lines in shielded form and connect the shield at several points (at least at the beginning and at the end of the line) to the mounting plate or the control cabinet housing over a large surface area.
- Separate lines from the other interference-susceptible lines in areas B and C by means of a grounded distance plate vertically attached to the mounting plate.

Install the shortest possible lines within the control cabinet and install them directly on the grounded metal surface of the mounting plate or of the control cabinet housing.

Mains supply lines from areas B and C should not be connected to the mains without a filter.

In case you do not observe the information on cable routing given in this section, the effect of the mains filter is totally or partly neutralized. This will cause the noise level of the interference emission to be higher within the range of 150 kHz to 40 MHz and the limit values at the connection points of the machine or installation will thereby be exceeded. Consider the specified distances to be recommended data, provided that the dimensions of the control cabinet allow the lines to be installed accordingly.

### Routing and connecting a neutral conductor (N)

If a neutral conductor is used together with a three-phase connection, it should not be installed unfiltered in zones B and C, in order to keep interference off the mains.

### Motor fan at mains filter

Single-phase or three-phase supply lines of motor fans, that are usually routed in parallel with motor power cables or interference-susceptible lines, have to be filtered:

- In drive systems with **regenerative supply units** via a **separate** single-phase or three-phase filter near the mains connection of the control cabinet
- In drive systems with **only feeding supply units** via the available three-phase filter of the drive system

  On the load side of the mains filter, voltage against ground with a high rise of voltage dv/dt may be present and interfere with the additional loads connected there.

Make sure that the fan is not switched off when power is switched off.

### Loads at drive system mains filter

**Only operate allowed loads at the mains filter of the drive system!**

Do not operate any motor fans, power supply units etc. at the mains filter of the drive system.

### Shielding mains supply lines in the control cabinet

If there is a high degree of interference injection to the mains supply line within the control cabinet, although you have observed the above instructions (to be found out by EMC measurement according to standard), proceed as follows:

- Only use shielded lines in area A
- Connect shields to the mounting plate at the beginning and the end of the line using clips

The same procedure may be required for long cables of more than 2 m between the point of power supply connection of the control cabinet and the filter within the control cabinet.

### Mains filter for AC drives

Ideally mount the mains filter on the parting line between the areas A and B. Make sure the ground connection between filter housing and housing of the drive controllers has good electrically conductive properties.

If **single-phase** loads are connected on the load side of the filter, their current may be a maximum of 10% of the three-phase operating current. A highly unbalanced load of the filter would deteriorate its interference suppression capacity.

If the mains voltage is more than 480 V, connect the filter to the output side of the transformer and not to the supply side of the transformer.

### Grounding

In the case of bad ground connections in the system, the distance between the lines to grounding points E1 and E2 in area A and the other grounding points of the drive system should be at least d4 = 400 mm in order to minimize interference injection from ground and ground cables to the mains supply lines.

See also ➡ Chapter Division into areas (zones) on page 155.

#### Equipment grounding conductor connection point at machine, system, control cabinet

The equipment grounding conductor of the power cable for the machine, system or control cabinet has to be **permanently connected** at point PE and have a **cross section of at least 10 mm²**, or be complemented by a second equipment grounding conductor using separate terminals (according to EN 61800-5-1:2007+A1:2017, section 4.3.5.5.2). If the cross section of the outer conductor is bigger, the cross section of the equipment grounding conductor has to be accordingly bigger.

### Design and installation in area B - interference-susceptible area of control cabinet

#### Arranging components and lines

Modules, components and lines in area B have to be placed at a distance of at least **d1 = 200 mm** from modules and lines in area A.

Alternative: Shield modules, components and lines in area B using distance plates mounted vertically on the mounting plate from modules and lines in area A or use shielded lines.

Only connect power supply units for auxiliary or control voltage connections in the drive system to the mains via a mains filter. See ➦ Chapter Division into areas (zones) on page 155.

Install the shortest possible lines between drive controller and filter.

#### Control voltage or auxiliary voltage connection

Only in exceptional cases should you connect power supply unit and fusing for the control voltage connection to phase and neutral conductor. In this case, mount and install these components in area A far away from the areas B and C of the drive system. For details see section ➦ Chapter Design and installation in area A - control cabinet area free from interference on page 158.

Run the connection between the control voltage connection of the drive system and the power supply unit used through area B over the shortest distance.

#### Line routing

Run the lines along grounded metal surfaces, in order to minimize radiation of interference fields to area A (transmitting antenna effect).

### Design and installation in area C - strongly interference-susceptible area of control cabinet

Area C mainly concerns the motor power cables, especially at the connection point at the drive controller.

#### Influence of the motor power cable

The longer the motor power cable, the greater its leakage capacitance. To comply with a certain EMC limit value, the allowed leakage capacitance of the mains filter is limited. For the calculation of the leakage capacitance, see the documentation on the drive system of the drive controller used.

- Run the shortest possible motor power cables.
- Only use **shielded** motor power cables by Rexroth.

### Running the motor power cables and motor encoder cables

Run the motor power cables and motor encoder cables along grounded metal surfaces, both inside the control cabinet and outside of it, in order to minimize radiation of interference fields. If possible, run the motor power cables and motor encoder cables in metal-grounded cable ducts.

Run the motor power cables and motor encoder cables

- with a distance of at least **d5 = 100 mm** to interference-free lines, as well as to signal cables and signal lines
  (alternatively separated by a grounded distance plate)
- in separate cable ducts, if possible

### Running the motor power cables and mains connection lines

For converters (drive controllers with individual mains connection), run motor power cables and (unfiltered) mains connection lines **parallel to one another for a maximum distance of 300 mm**. After that distance, run motor power cables and power supply cables in opposite directions and preferably in separate **cable ducts**.

Ideally, the motor power cables should exit the control cabinet at a distance of at least **d3 = 200 mm** from the (filtered) power supply cable.

Table 60: Converter - running motor power cables

| With cable duct | Without cable duct |
|---|---|
| 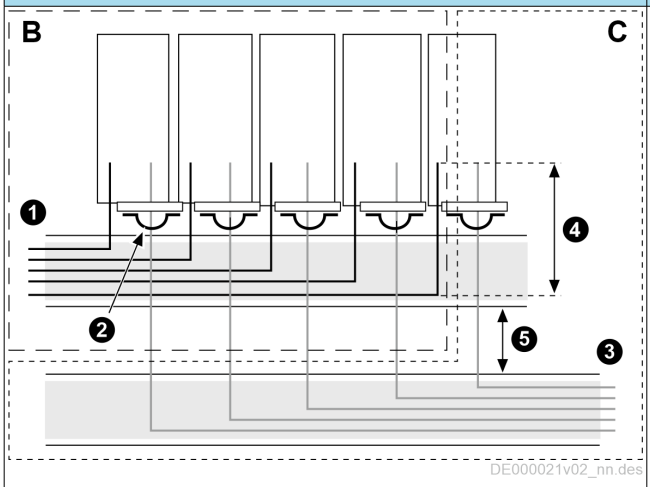 <br>B Area B<br>C Area C<br>1 Cable duct for mains connection lines<br>2 Shield connection of motor power cable with clips at least at one point; alternatively, at the device or control cabinet mounting plate<br>3 Cable duct for motor power cables<br>4 Parallel routing of mains connection lines and motor power cables over a maximum of 300 mm<br>5 Distance of at least 100 mm or separated by a grounded distance plate | 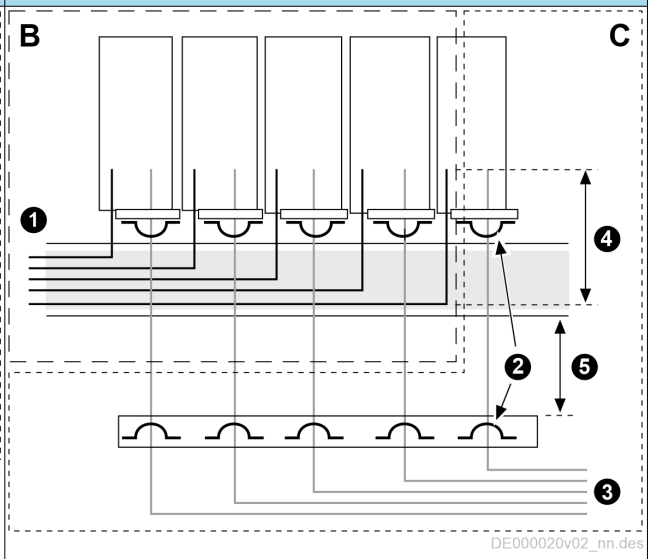 <br>B Area B<br>C Area C<br>1 Cable duct for mains connection lines<br>2 Shield connection of motor power cable with clips at least at one point; alternatively, at the device or control cabinet mounting plate<br>3 Control cabinet outlet of motor power cables<br>4 Parallel routing of mains connection lines and motor power cables over a maximum of 300 mm<br>5 Distance of at least 100 mm or separated by a grounded distance plate |

Table 61: Inverter - running motor power cables

| With cable duct | Without cable duct |
|---|---|
| 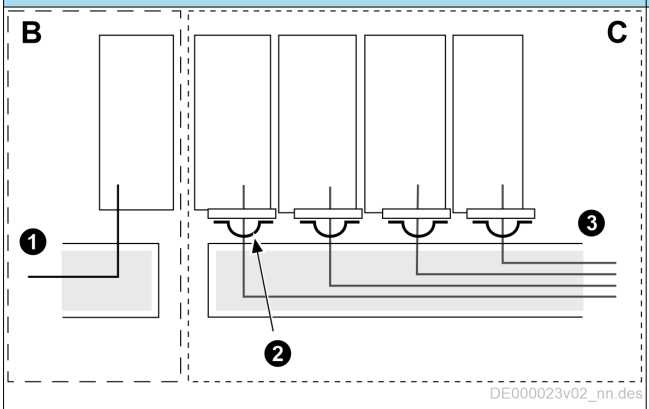 <br>B Area B<br>C Area C<br>1 Cable duct for mains connection lines<br>2 Shield connection of motor power cable with clips at least at one point; alternatively, at the device or control cabinet mounting plate<br>3 Cable duct for motor power cables | 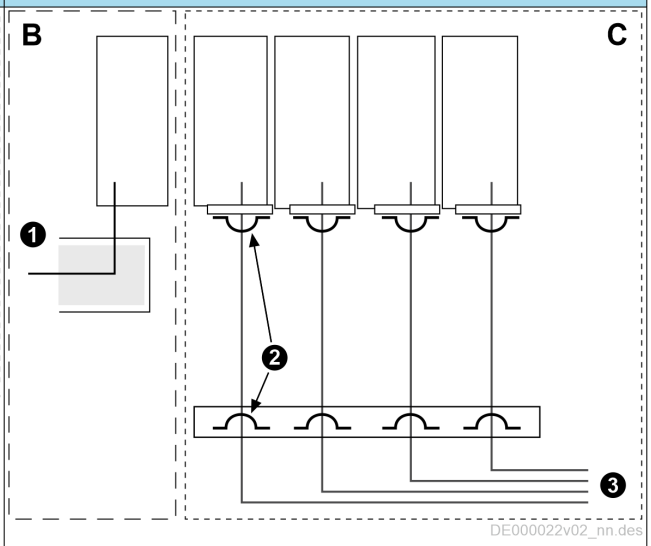 <br>B Area B<br>C Area C<br>1 Cable duct for mains connection lines<br>2 Shield connection of motor power cable with clips at least at one point; alternatively, at the device or control cabinet mounting plate<br>3 Control cabinet outlet of motor power cables |

## Ground connections

### Housing and mounting plate

With the appropriate ground connections, it is possible to avoid the emission of interference, because interference is discharged to ground over the shortest possible distance.

Ground connections of the metal housings of EMC-critical components (such as filters, devices of the drive system, connection points of the cable shields, devices with microprocessor and switching power supply units) have to be well contacted over a large surface area. This also applies to all screw connections between mounting plate and control cabinet wall and to mounting a ground bar to the mounting plate.

The best solution is to use a zinc-coated mounting plate. Compared to a varnished plate, the connections in this case have a good long-time stability.

### Connecting elements

For varnished mounting plates, always use screw connections with tooth lock washers and zinc-coated, tinned screws as connecting elements. At the connection points, remove the varnish so that there is safe electrical contact over a large surface area. You achieve contact over a large surface area with bare connection surfaces or multiple connection screws. For screw connections, you can establish the contact to varnished surfaces by using tooth lock washers.

#### Metal surfaces

Always use connecting elements (screws, nuts, washers) with good electroconductive surface.

Bare zinc-coated or tinned metal surfaces have **good electroconductive properties**.

Anodized, yellow chromatized, black gunmetal finish or lacquered metal surfaces have **bad electroconductive properties**.

#### Ground wires and shield connections

When connecting ground wires and shield connections, what is important is not the cross section of the wire, but the area of the contact surface, since high-frequency interference currents mainly flow on the surface of the conductor.

Always connect cable shields, especially shields of the motor power cables, to ground potential over a large surface area.

### Installing signal lines and signal cables

#### Line routing

For measures to prevent interference, see the Project Planning Manual of each device. In addition, we recommend the following measures:

- Run signal and control lines separately from the power cables with a minimum distance of **d5 = 100 mm** (see ➦ Chapter Division into areas (zones) on page 155) or with a grounded separating sheet. The optimum way is to run them in separate cable ducts. If possible, lead signal lines into the control cabinet at one point only.
- If signal lines are crossing power cables, run them in an angle of 90° in order to avoid interference injection.
- Ground spare cables, that are not used and have been connected, at least at both ends so that they do not have any antenna effect.
- Avoid unnecessary line lengths.
- Run cables as close as possible to grounded metal surfaces (reference potential). The ideal solution are closed, grounded cable ducts or metal pipes which, however, is only obligatory for high requirements (sensitive measuring lines).
- Avoid suspended lines or lines routed along synthetic carriers, because they are functioning like reception antennas (noise immunity) and like transmitting antennas (emission of interference). Exceptional cases are flexible cable tracks over short distances of a maximum of 5 m.

### Shielding

Connect the cable shield immediately at the devices in the shortest and most direct way possible and over the largest possible surface area.

Connect the shield of **analog signal lines** at one end over a large surface area, normally in the control cabinet at the analog device. Make sure the connection to ground/housing is short and over a large surface area.

Connect the shield of **digital signal lines** at both ends over a large surface area and in short form. In the case of potential differences between beginning and end of the line, run an additional bonding conductor in parallel. This prevents compensating current from flowing via the shield. The recommended cross section is 10 $mm^2$.

Separable connections always have to be equipped with male and female connectors with grounded metal housings.

In the case of non-shielded lines belonging to the same circuit, twist the supply and return lines.

### General interference suppression measures for relays, contactors, switches, chokes and inductive loads

If inductive loads, such as chokes, contactors or relays are switched by contacts or semiconductors in conjunction with electronic devices and components, suitable interference suppression has to be provided for them:

- By arranging free-wheeling diodes in the case of d.c. operation
- In the case of a.c. operation, by arranging usual RC interference suppression elements depending on the contactor type, immediately at the inductance

Only the interference suppression element placed immediately at the inductance serves the purpose. Otherwise, the radiated noise level is too high and may affect the function of electronics and drive.

### Information on interference suppression measures

If high-frequency interference injection occurs in spite of the recommended interference suppression measures, the source of interference should be identified and removed in the control cabinet or in the field.

Possible sources of interference in the control cabinet:

- Frequency converter
- Contactors featuring a control coil without interference suppression
- 24 V DC brush motors
- 24 V solenoid valves
- Incorrect line routing

Possible sources of interference in the field:

- Improper ground connections of installation parts or machine parts
- Installation parts or machine parts that are charged electrostatically during the operating process and cannot discharge

If it is impossible to find the source of interference, connect the heat sink of the drive controller directly to the bare metal mounting surface using a grounding strip (as short as possible; cross section ≥ 10 $mm^2$).

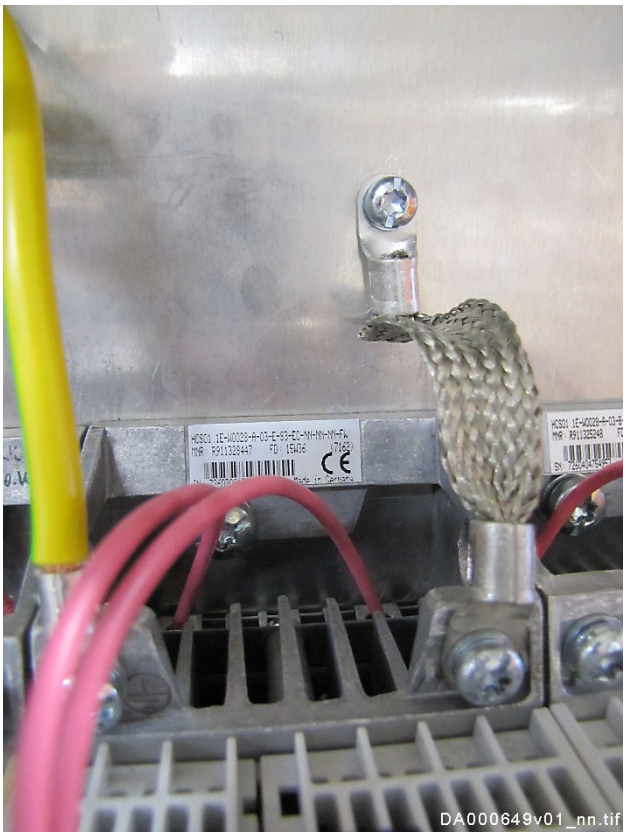


Fig. 26: Grounding strip between heat sink and mounting surface (example)

### 10.7.3 Overcurrent protection

Protect the components against overcurrent:

- Branch circuit protection has to be provided externally
- Size the branch circuit protection according to the "Branch circuit protection fuse" data (see Ratings and dimensions)

## 10.7.4 Overall connection diagrams

### Overall connection diagram XCS*-W0010/W0023

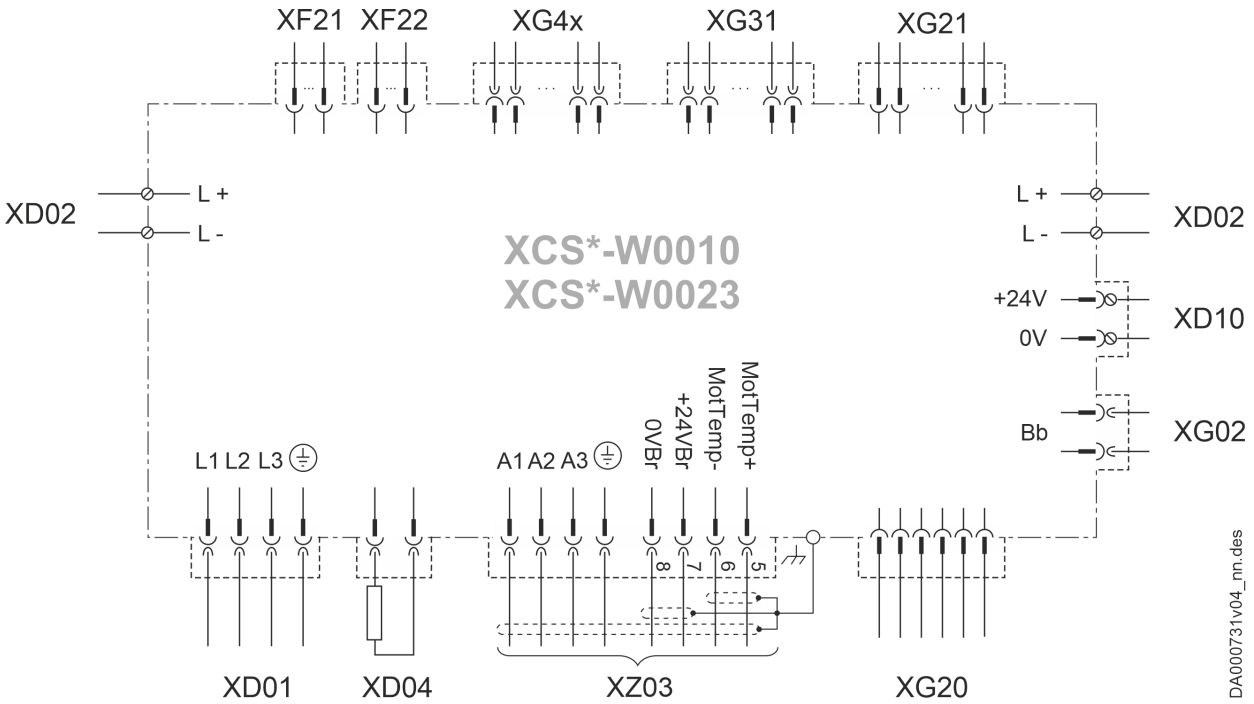


Fig. 27: Overall connection diagram XCS*-W0010/W0023

| | | | |
|---|---|---|---|
| XD01 | Mains | XG20 | Digital encoder |
| XD02 | DC bus | XG21 | Multi-encoder (optional) |
| XD04 | Internal/external braking resistor | XG31 | Digital inputs/outputs; analog input |
| XD10 | Control voltage | XG4x | Safety technology |
| XF21, XF22 | Communication | XZ03 | Motor, motor temperature monitoring, motor holding brake |
| XG02 | Ready for operation relay contact | | |

**Overall connection diagram XCS*-*0054/*0070**

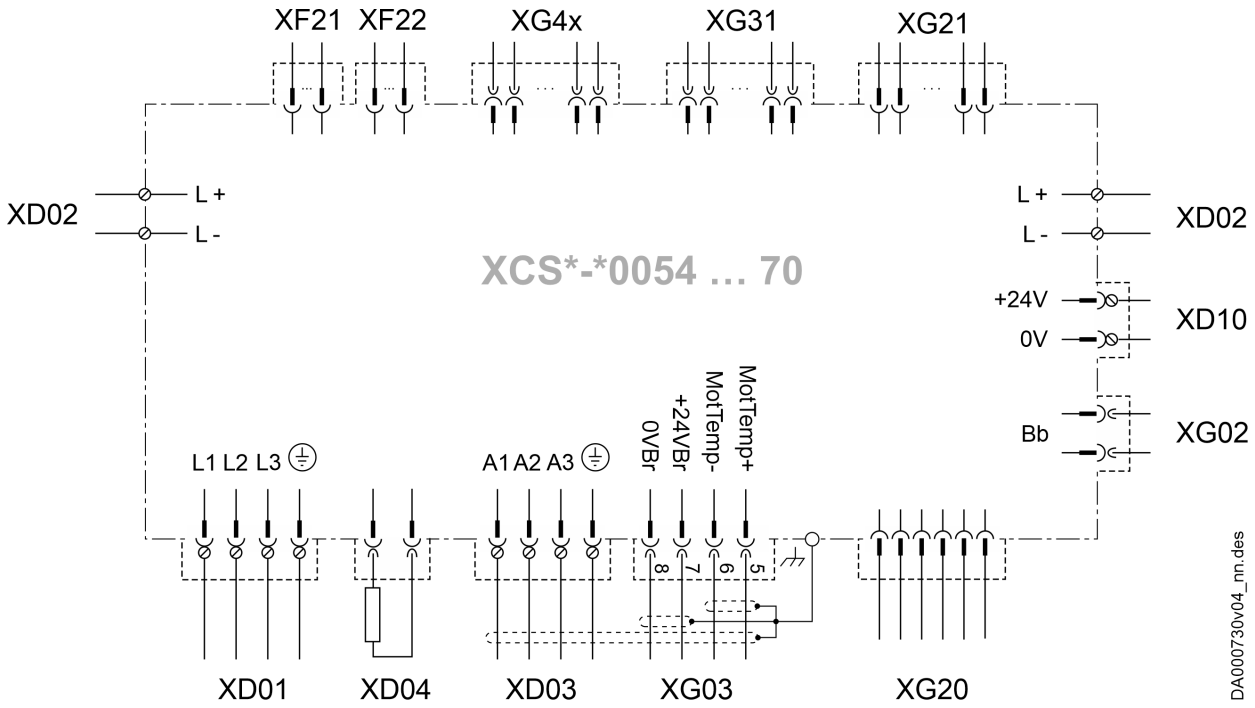


Fig. 28: Overall connection diagram XCS*-*0054/*0070

| | | | |
|---|---|---|---|
| XD01 | Mains | XG03 | Motor temperature monitoring and motor holding brake |
| XD02 | DC bus | | |
| XD03 | Motor | XG20 | Digital encoder |
| XD04 | External braking resistor | XG21 | Multi-encoder (optional) |
| XD10 | Control voltage | XG31 | Digital inputs/outputs; analog input |
| XF21, XF22 | Communication | XG4x | Safety technology |
| XG02 | Ready for operation relay contact | | |

### Overall connection diagram XCS*-*0090

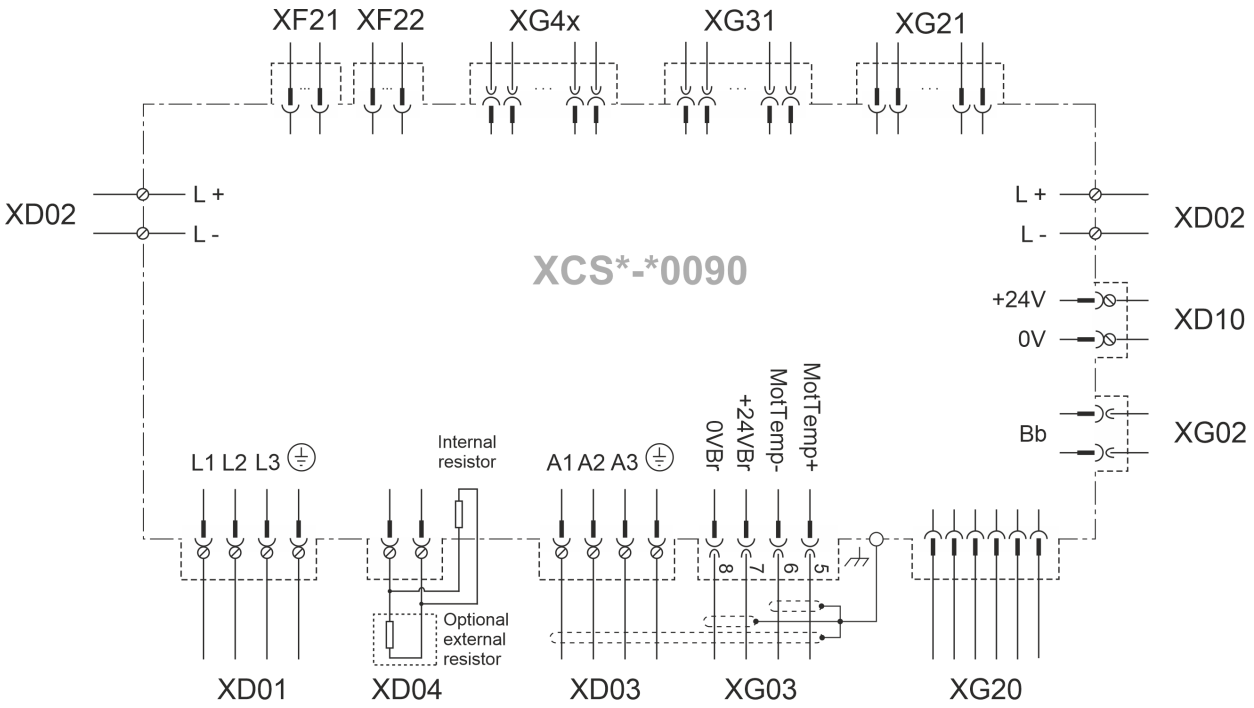


Fig. 29: Overall connection diagram XCS*-*0090

| | | | |
|---|---|---|---|
| XD01 | Mains | XG03 | Motor temperature monitoring and motor holding brake |
| XD02 | DC bus | XG20 | Digital encoder |
| XD03 | Motor | XG21 | Multi-encoder (optional) |
| XD04 | Internal/external braking resistor | XG31 | Digital inputs/outputs; analog input |
| XD10 | Control voltage | XG4x | Safety technology |
| XF21, XF22 | Communication | | |
| XG02 | Ready for operation relay contact | | |

**Overall connection diagram XCS*-W01xx**

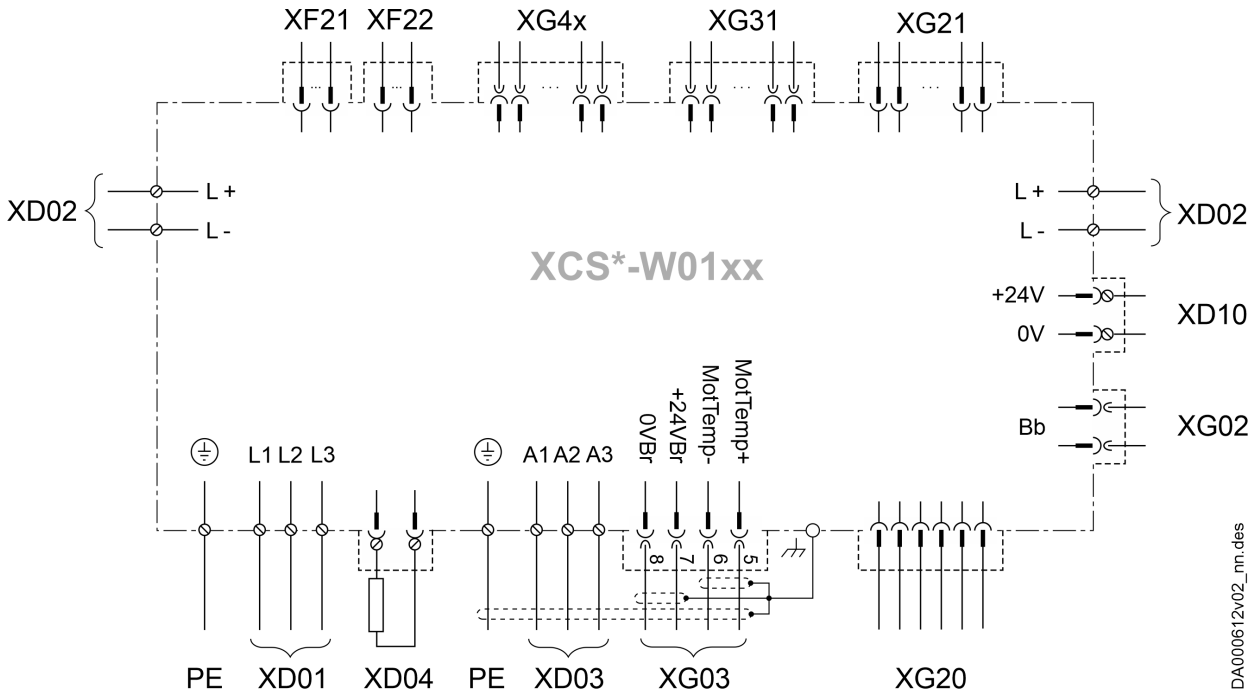


Fig. 30: Overall connection diagram XCS*-W01xx

| | | | |
|---|---|---|---|
| XD01 | Mains | XG03 | Motor temperature monitoring and motor holding brake |
| XD02 | DC bus | | |
| XD03 | Motor | XG20 | digital encoder |
| XD04 | external braking resistor | XG21 | Multi encoder (optional) |
| XD10 | Control voltage | XG31 | digital inputs/outputs; analog input |
| XF21, XF22 | Communication | XG4x | Safety technology |
| XG02 | Ready for operation relay contact | | |

### Overall connection diagram XCS*-*02xx/*03xx

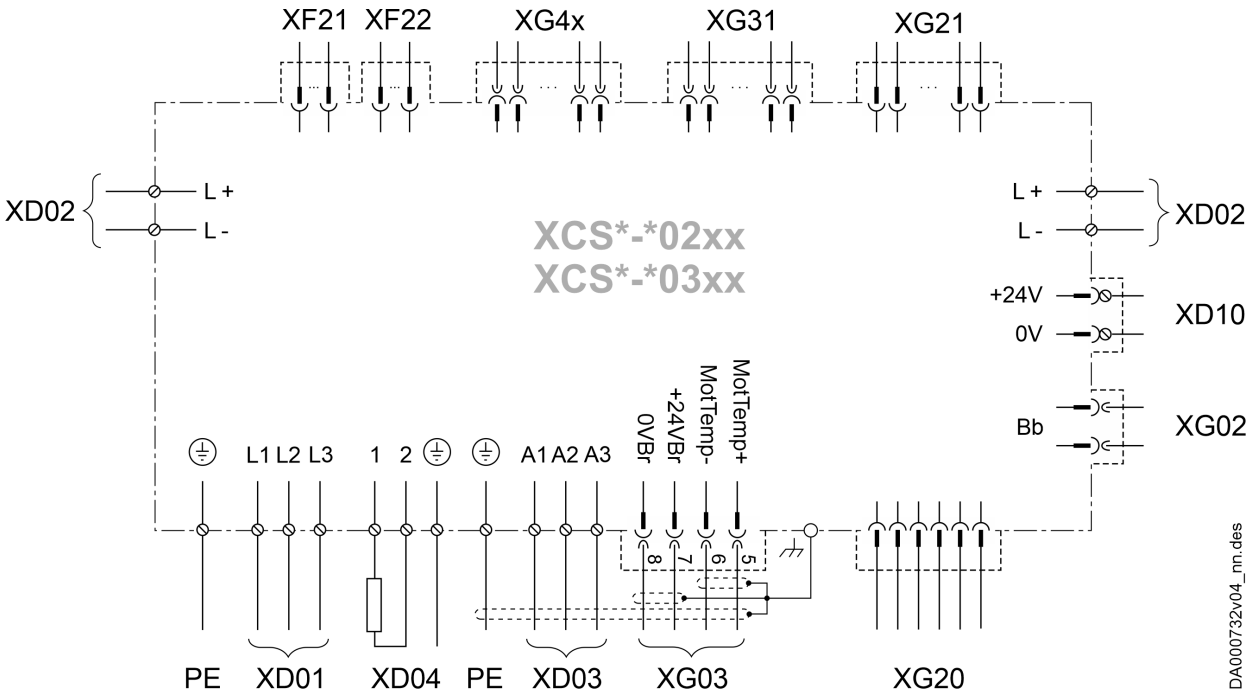


Fig. 31: Overall connection diagram XCS*-*02xx/*03xx

| | | | |
|---|---|---|---|
| XD01 | Mains | XG03 | Motor temperature monitoring and motor holding brake |
| XD02 | DC bus | | |
| XD03 | Motor | XG20 | Digital encoder |
| XD04 | External braking resistor | XG21 | Multi-encoder (optional) |
| XD10 | Control voltage | XG31 | Digital inputs/outputs; analog input |
| XF21, XF22 | Communication | XG4x | Safety technology |
| XG02 | Ready for operation relay contact | | |

## Overall connection diagram XCD

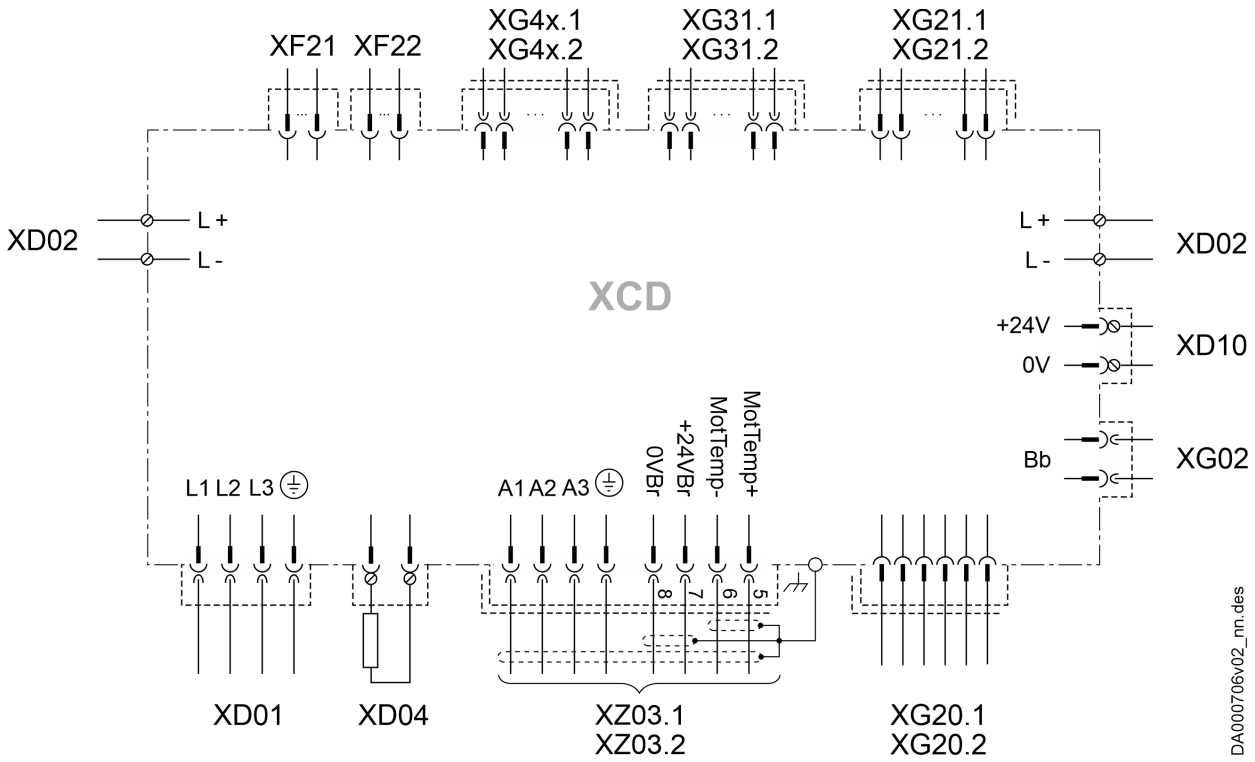


Fig. 32: Overall connection diagram XCD

| | | | |
|---|---|---|---|
| XD01 | Mains | XG20 | digital encoder |
| XD02 | DC bus | XG21 | Multi encoder (optional) |
| XD04 | external braking resistor | XG31 | digital inputs/outputs; analog input |
| XD10 | Control voltage | XG4x | Safety technology |
| XF21, XF22 | Communication | XZ03 | Motor, motor temperature monitoring, motor holding brake |
| XG02 | Ready for operation relay contact | | |

## Overall connection diagram XMS*-W0006...W0036

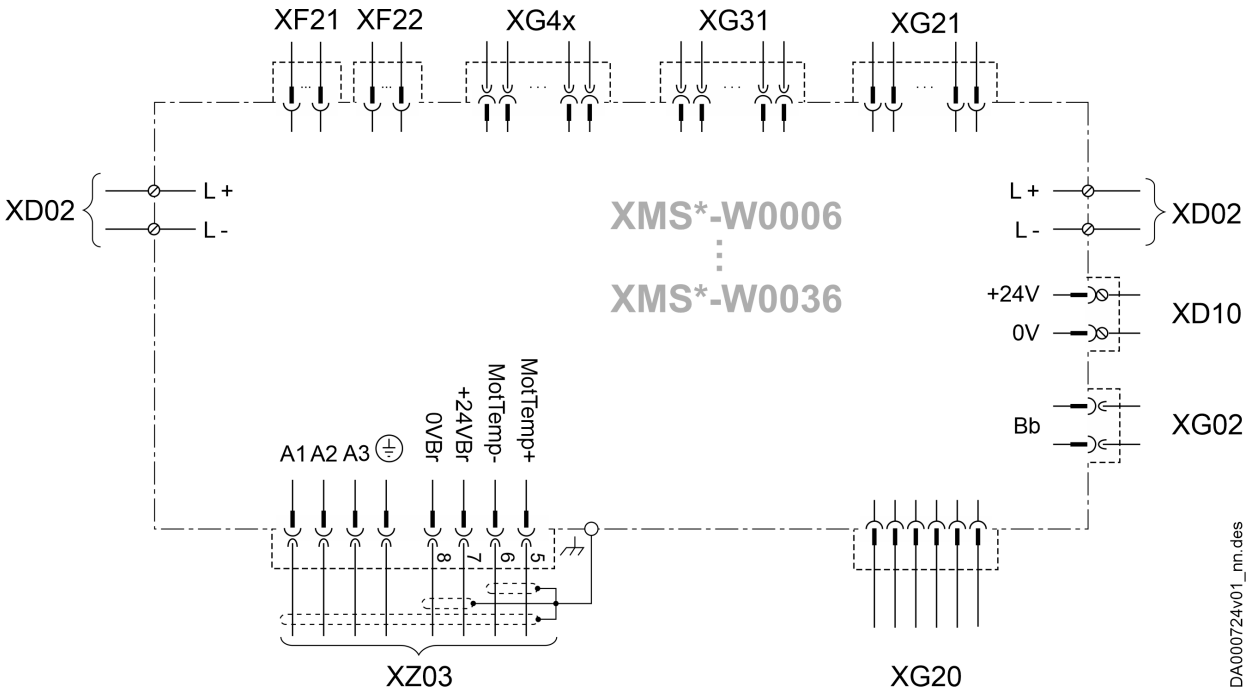


Fig. 33: Overall connection diagram XMS*-W0006...W0036

| | | | |
|---|---|---|---|
| XD02 | DC bus | XG21 | Multi-encoder (optional) |
| XD10 | Control voltage | XG31 | Digital inputs/outputs; analog input |
| XF21, XF22 | Communication | XG4x | Safety technology |
| XG02 | Ready for operation relay contact | XZ03 | Motor, motor temperature monitoring, motor holding brake |
| XG20 | Digital encoder | | |

**Overall connection diagram XCS*-W0054/W0090**

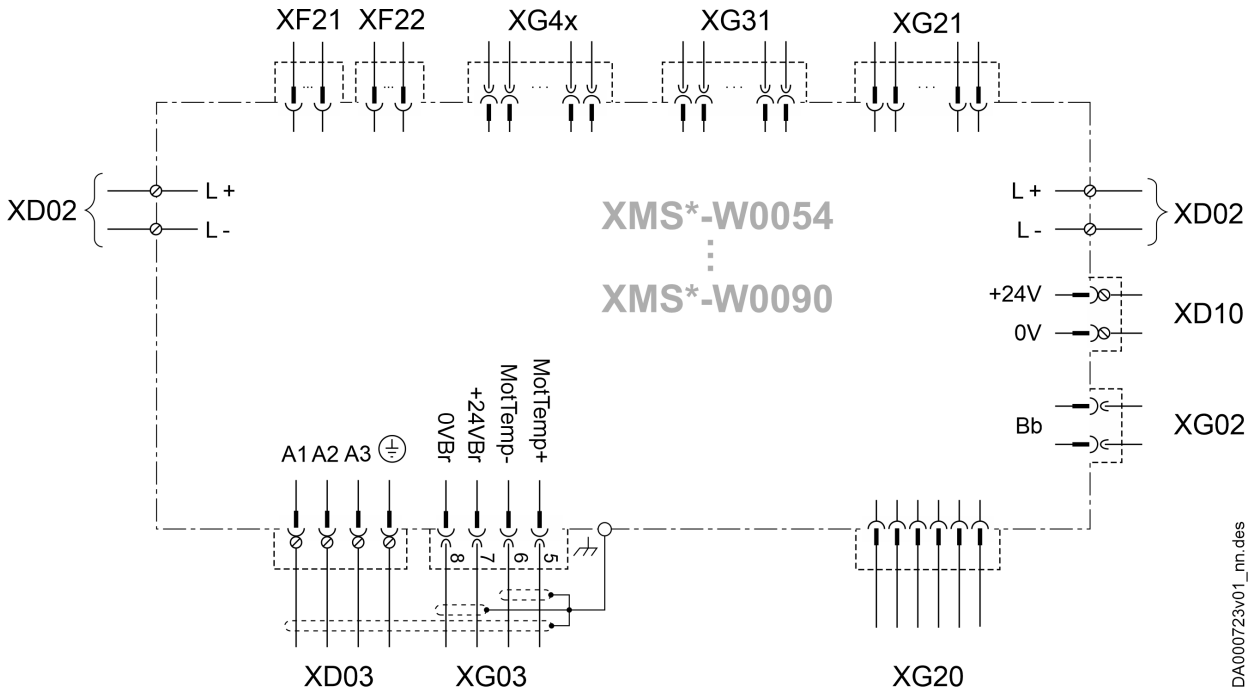


Fig. 34: Overall connection diagram XCS*-W0054/W0090

| | | | |
|---|---|---|---|
| XD02 | DC bus | XG20 | Digital encoder |
| XD03 | Motor | XG21 | Multi-encoder (optional) |
| XD10 | Control voltage | XG31 | Digital inputs/outputs; analog input |
| XF21, XF22 | Communication | XG4x | Safety technology |
| XG02 | Ready for operation relay contact | | |
| XG03 | Motor temperature monitoring, motor holding brake | | |

### Overall connection diagram XMS*-*0100...*0375

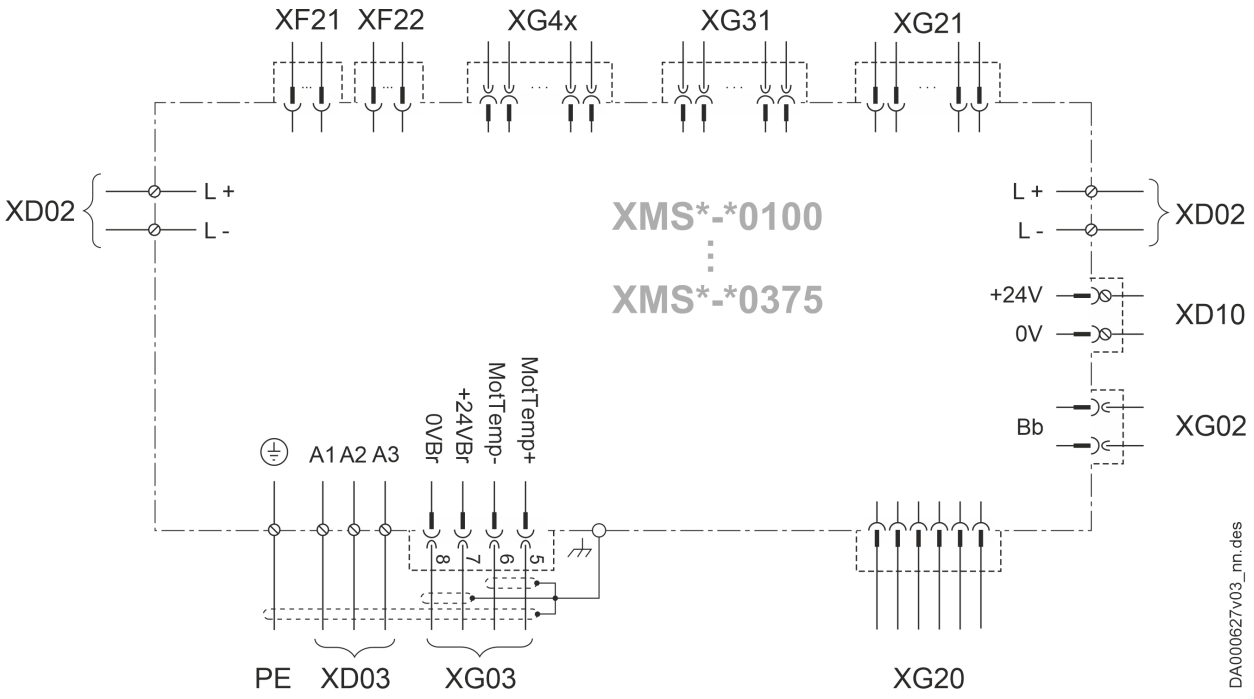


Fig. 35: Overall connection diagram XMS*-*0100...*0375

| | | | |
|---|---|---|---|
| XD02 | DC bus | XG20 | Digital encoder |
| XD03 | Motor | XG21 | Multi-encoder (optional) |
| XD10 | Control voltage | XG31 | Digital inputs/outputs; analog input |
| XF21, XF22 | Communication | XG4x | Safety technology |
| XG02 | Ready for operation relay contact | | |
| XG03 | Motor temperature monitoring and motor holding brake | | |

### Overall connection diagram XMD*-W0606 ... W3636

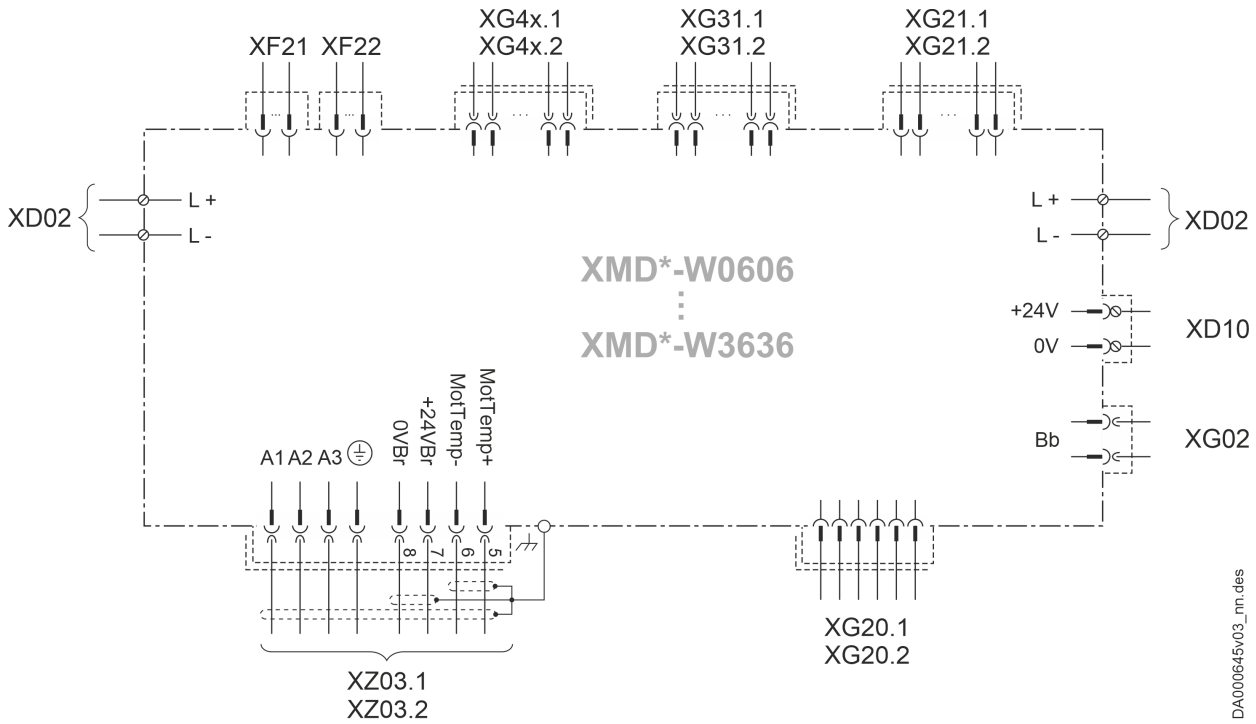


Fig. 36: Overall connection diagram XMD*-W0606 ... W3636

| | | | |
|---|---|---|---|
| XD02 | DC bus | XG21 | Multi-encoder (optional) |
| XD10 | Control voltage | XG31 | Digital inputs/outputs; analog input |
| XF21, XF22 | Communication | XG4x | Safety technology |
| XG02 | Ready for operation relay contact | XZ03 | Motor, motor temperature monitoring, motor holding brake |
| XG20 | Digital encoder | | |

## Overall connection diagram XMD*-*5454/-*7070

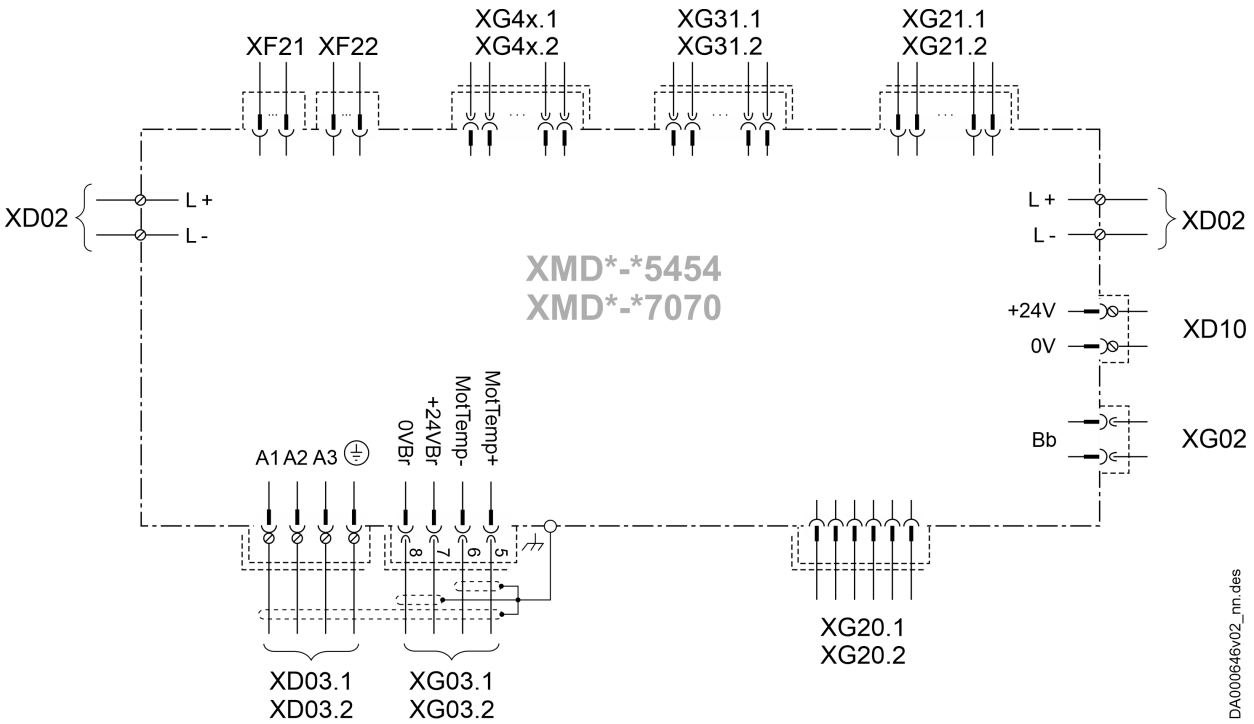


Fig. 37: Overall connection diagram XMD*-*5454/-*7070

| | | | |
|---|---|---|---|
| XD02 | DC bus | XG20 | Digital encoder |
| XD03 | Motor | XG21 | Multi-encoder (optional) |
| XD10 | Control voltage | XG31 | Digital inputs/outputs; analog input |
| XF21, XF22 | Communication | XG4x | Safety technology |
| XG02 | Ready for operation relay contact | | |
| XG03 | Motor temperature monitoring and motor holding brake | | |

### Overall connection diagram XMQ*-WQ001

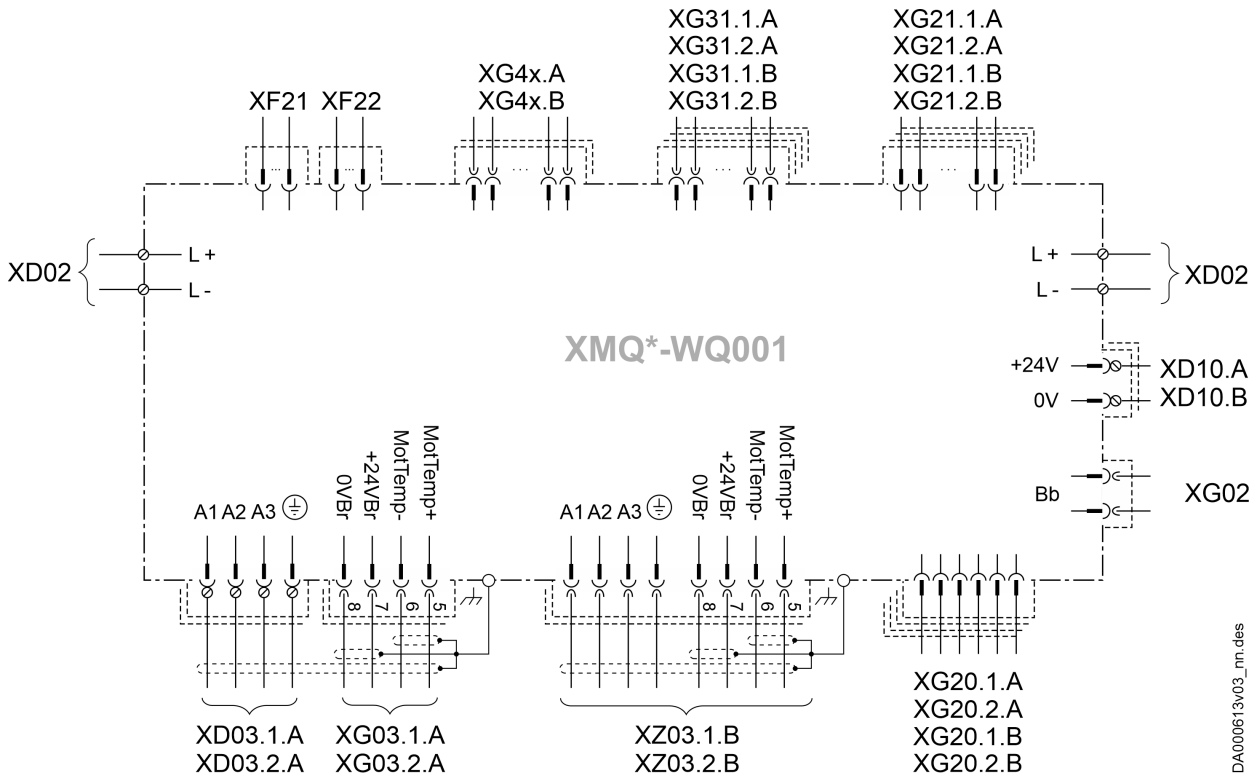


Fig. 38: Overall connection diagram XMQ*-WQ001

| | | | |
|---|---|---|---|
| X...A, X...B | Connection points of axis module A or B | XG03 | Motor temperature monitoring and motor holding brake |
| Xxxx.1/2.A/B | Xxxx.1.A (Axis1: 54 A); Xxxx.2.A (Axis2: 36 A); Xxxx.1.B (Axis3: 20 A); Xxxx.2.B (Axis4: 10 A) | XG20 | Digital encoder |
| | | XG21 | Multi-encoder (optional) |
| | | XG31 | Digital inputs/outputs; analog input |
| XD02 | DC bus | | |
| XD03 | Motor | XG4x | Safety technology |
| XD10 | Control voltage | XZ03 | Motor, motor temperature monitoring, motor holding brake |
| XF21, XF22 | Communication | | |
| XG02 | Ready for operation relay contact | | |

## Overall connection diagram XMQ*-WQ002

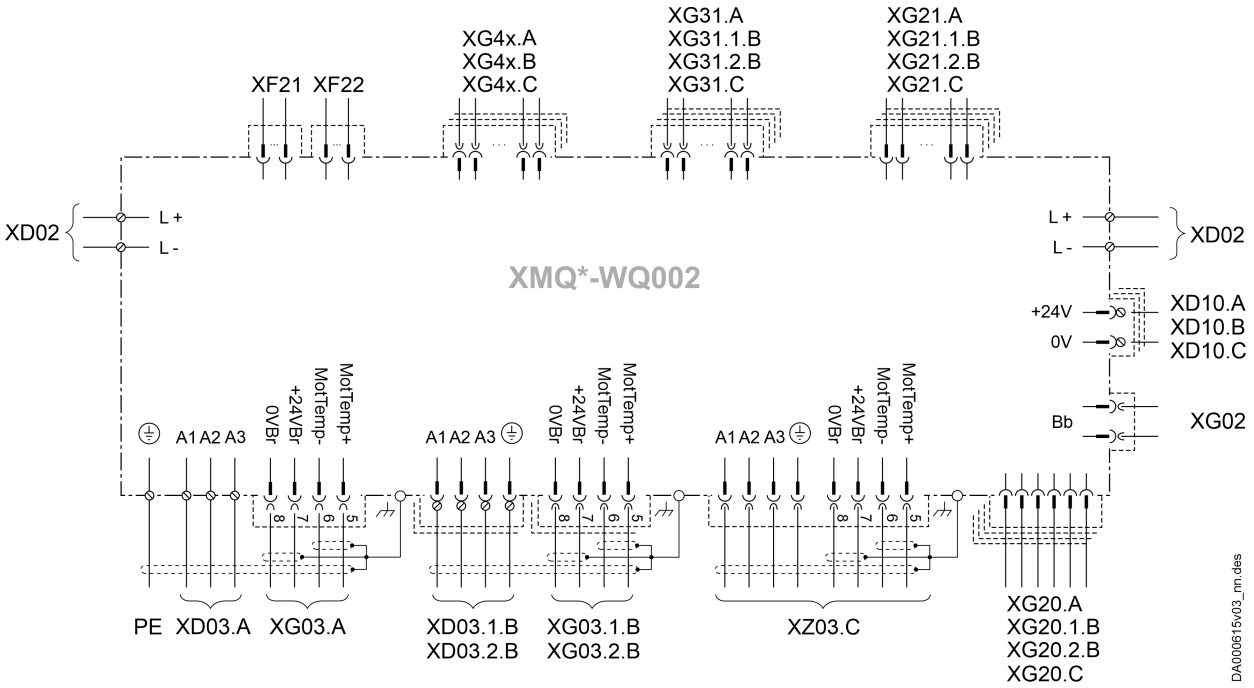


Fig. 39: Overall connection diagram XMQ*-WQ002

| | |
|---|---|
| X...A, X...B, X...C | Connection points of axis module A, B or C |
| Xxxx.A/C; Xxxx.1/2.B | Xxxx.A (Axis1: 100 A); Xxxx.1.B (Axis2: 70 A); Xxxx.2.B (Axis3: 36 A); Xxxx.C (Axis4: 10 A) |
| XD02 | DC bus |
| XD03 | Motor |
| XD10 | Control voltage |
| XF21, XF22 | Communication |
| XG02 | Ready for operation relay contact |
| XG03 | Motor temperature monitoring and motor holding brake |
| XG20 | Digital encoder |
| XG21 | Multi-encoder (optional) |
| XG31 | Digital inputs/outputs; analog input |
| XG4x | Safety technology |
| XZ03 | Motor, motor temperature monitoring, motor holding brake |

## Overall connection diagram XVR

### XVR*-W0019

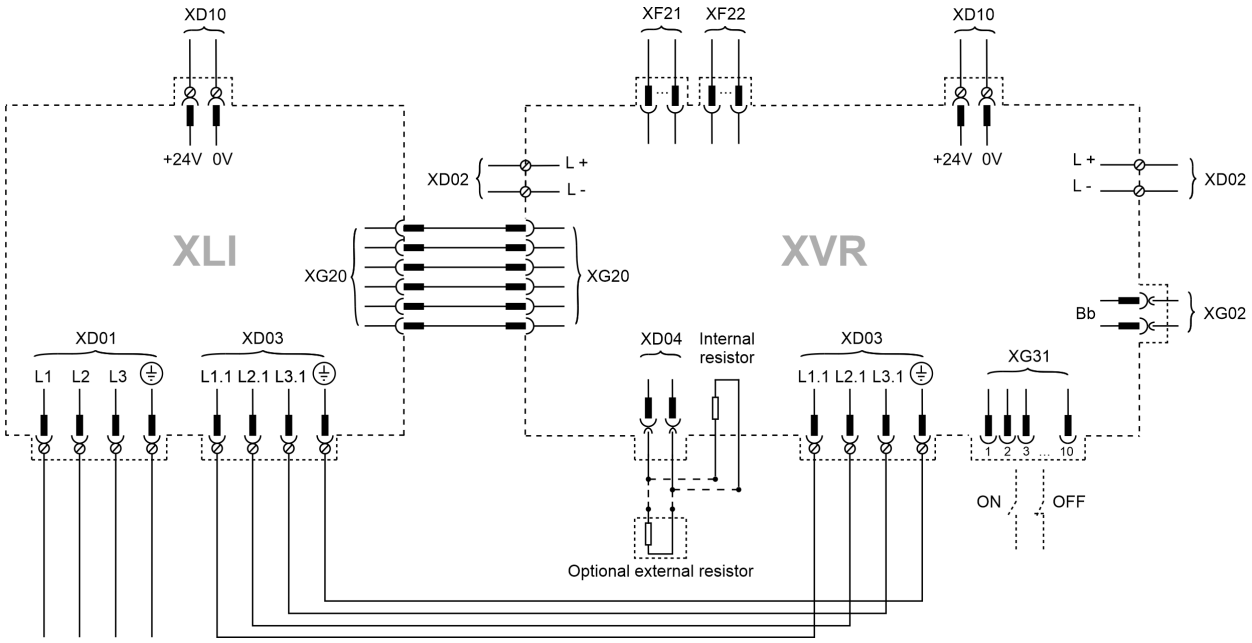


Fig. 40: Overall connection diagram XVR*-W0019

| | | | |
|---|---|---|---|
| XD01 | Mains | XG02 | Ready for operation relay contact |
| XD02 | DC bus | XG20 | XLI bus |
| XD03 | Mains XLI-XVR | XG31 | Digital inputs/outputs; analog input |
| XD04 | External **or** internal braking resistor | XLI | Mains connection module |
| XD10 | Control voltage | XVR | Supply unit |
| XF21, XF22 | Communication | | |

XVR*-W0048 ... W0100

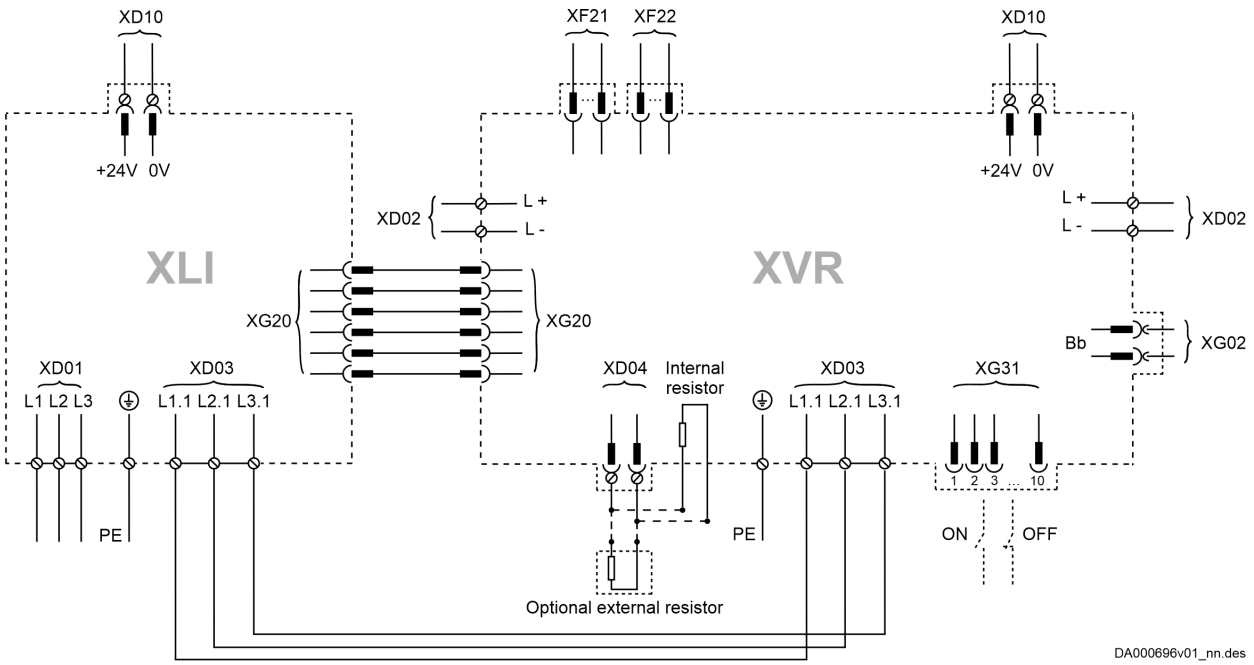


Fig. 41: Overall connection diagram XVR*-W0048 ... W0100

| | | | |
|---|---|---|---|
| XD01 | Mains | XG02 | Ready for operation relay contact |
| XD02 | DC bus | XG20 | XLI bus |
| XD03 | Mains XLI-XVR | XG31 | Digital inputs/outputs; analog input |
| XD04 | External **or** internal braking resistor | XLI | Mains connection module |
| XD10 | Control voltage | XVR | Supply unit |
| XF21, XF22 | Communication | | |

### Overall connection diagram XVE*-W0030

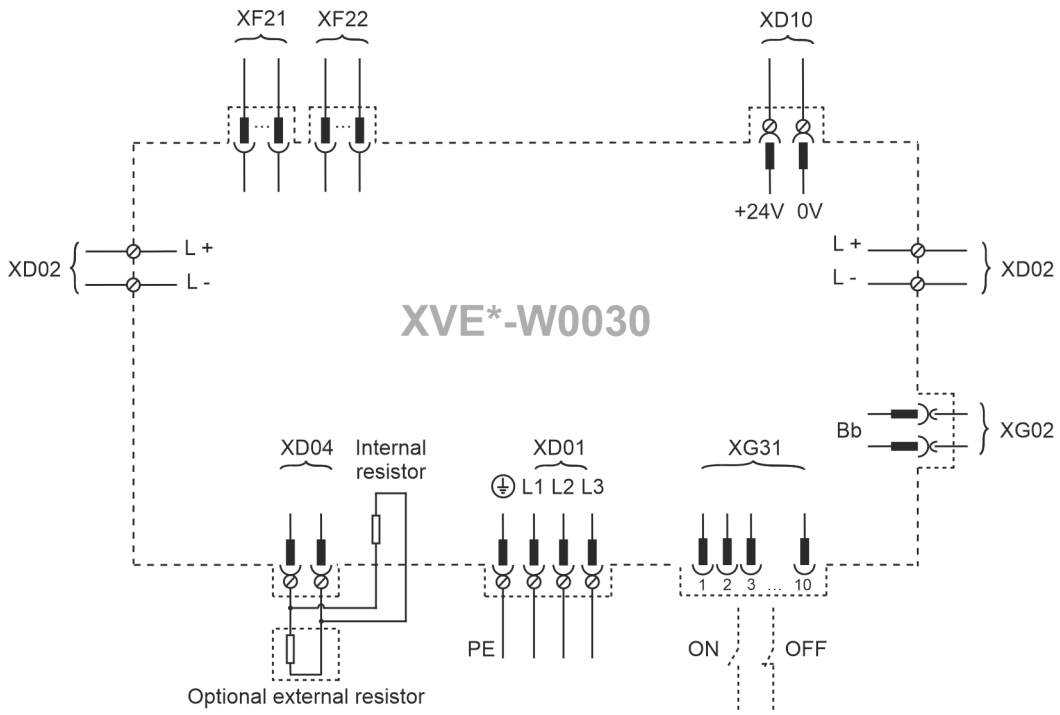


Fig. 42: Overall connection diagram XVE*-W0030

| | | | |
|---|---|---|---|
| XD01 | Mains connection | XF21, XF22 | Communication |
| XD02 | DC bus | XG02 | Ready for operation relay contact |
| XD04 | External/internal braking resistor | XG31 | Digital inputs/outputs; analog input |
| XD10 | Control voltage | XVE | Supply unit |

Symbols: See ➡ Chapter Symbols (connection diagram) on page 183

### Overall connection diagram XVE*-W0075/-W0125

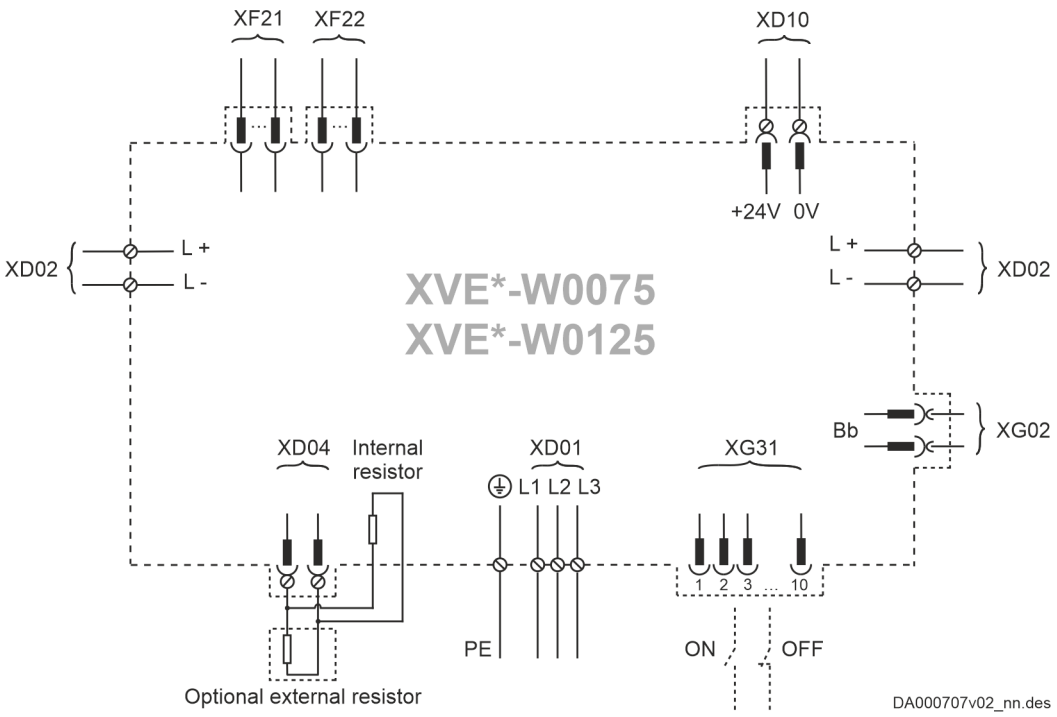


Fig. 43: Overall connection diagram XVE*-W0075/-W0125

| | | | |
|---|---|---|---|
| XD01 | Mains connection | XF21, XF22 | Communication |
| XD02 | DC bus | XG02 | Ready for operation relay contact |
| XD04 | External/internal braking resistor | XG31 | Digital inputs/outputs; analog input |
| XD10 | Control voltage | XVE | Supply unit |

Symbols: See ➦ Chapter Symbols (connection diagram) on page 183

### Symbols (connection diagram)

Table 62: Symbols (connection diagram)

| Symbol | Description |
|---|---|
| | Pin |
| | Female connector |
| | Male connector (pin at male connector, female connector at device) |
| | Spring-loaded terminal (female connector at male connector, pin at device) |
| | Screw terminal (female connector at male connector, pin at device) |
| | Screw connection at device |
| | Electrical connection at the device housing (e.g. for shield connector of a cable) |

## 10.7.5 On-board connection points

### Equipment grounding conductor

**⚠ WARNING**

**High housing voltage and high leakage current! Danger to life, risk of injury by electric shock!**

- Prior to commissioning the components, ground or connect the components of the electric drive and control system to the equipment grounding conductor at the grounding points.
- Connect the equipment grounding conductor of the components of the electric drive and control system permanently to the main power supply at all times. The leakage current is greater than 3.5 mA.
- Establish an equipment grounding connection with a copper wire of a cross section of at least 10 mm². Additionally run a second equipment grounding conductor of the same cross section as the original equipment grounding conductor.

**⚠ WARNING**

**Lethal electric shock due to live parts with more than 50 V!**

Only operate the device

- with connected connectors (even if no lines are connected to the connectors) and
- with connected equipment grounding conductor!

**Equipment grounding conductor: Material and cross section**

Use the same metal (e.g., copper) for the equipment grounding conductor as for the outer conductors.

When connecting the equipment grounding conductor connection point of the device to the equipment grounding system within the control cabinet, take into account that a sufficient cable cross section is required.

Cross section of equipment grounding connection: **Minimum 10 mm²**, but not smaller than the cross section of the supply feeder.

Additionally mount the housing on a metallic, uncoated mounting plate. Also connect the mounting plate with at least the same cross-section to the protective conductor system in the control cabinet.

### M5 (housing)

Connect ring cable lugs **M5** of equipment grounding conductors to device housing ( ⏚ symbol).

Tightening torque: 2.8 Nm

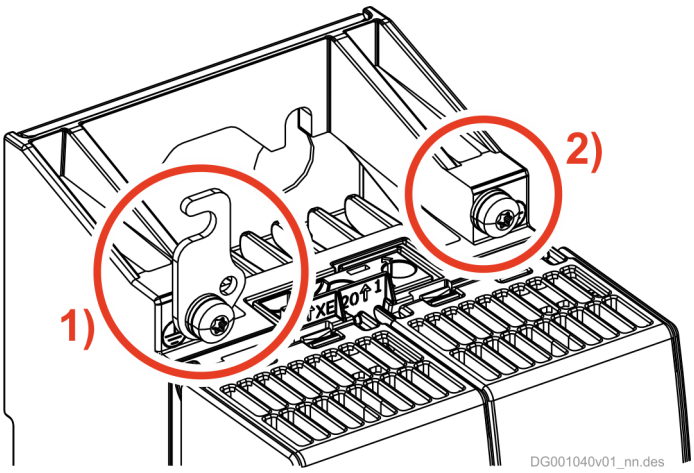


Fig. 44: Connection point of equipment grounding conductor

1) Equipment grounding conductor connection point with claw bolt for connection with neighboring device
2) Equipment grounding conductor connection

### XCS*-W0100/120

Connect ring cable lugs **M5** of equipment grounding conductors to device housing ( ⏚ symbol).

Tightening torque: 4.5 Nm

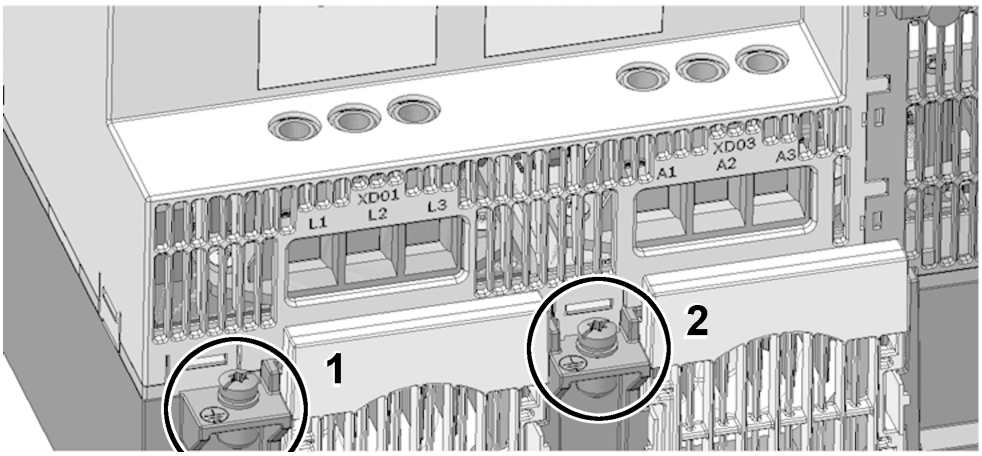


Fig. 45: Connection point of equipment grounding conductor

1 Mains
2 Motor

### XCS*/XMS*-W0150/180, XVR*-W0048/72/100, XVE*-W0075

Connect ring cable lugs **M6** of equipment grounding conductors to device housing ( ⏚ symbol).

Tightening torque: 4 ... 5 Nm

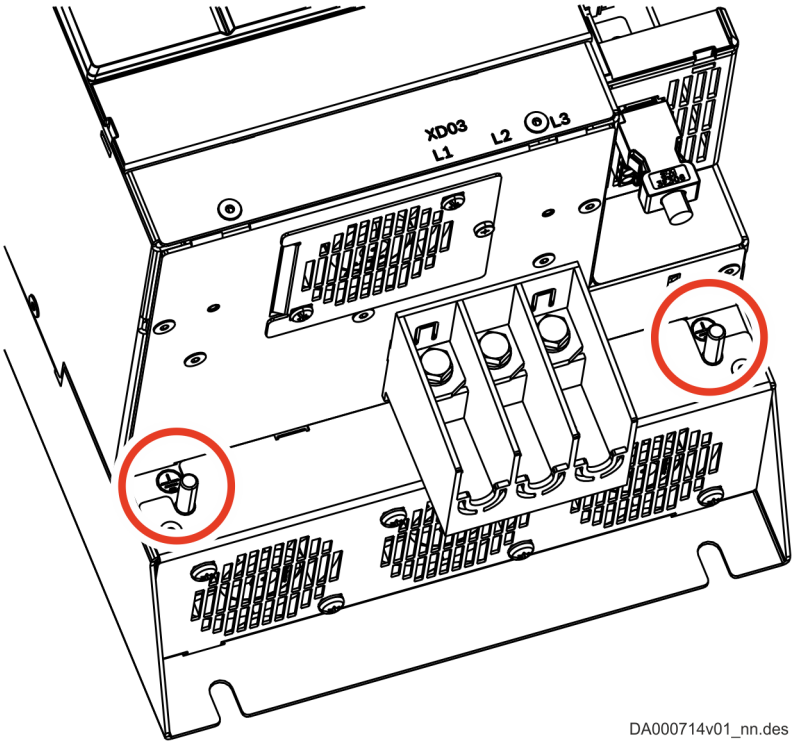


Fig. 46: Connection point of equipment grounding conductor (XVR*-W0048, for example)

### XCS*/XMS*-*02xx/*03xx, XVE*-W0125

Connect ring cable lugs **M8** of equipment grounding conductors to device housing ( ⏚ symbol).

Tightening torque: 8 Nm

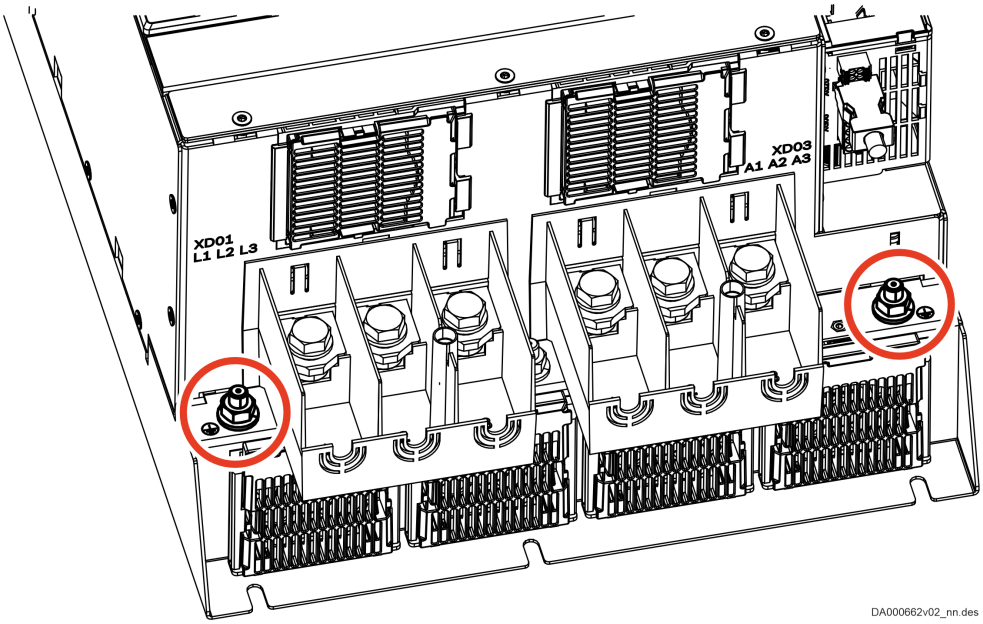


Fig. 47: Connection point of equipment grounding conductor (XCS*-W02xx, for example)

## XD01, mains connection

### Important information

**⚠ WARNING**

**Lethal electric shock due to live parts with more than 50 V!**

Only operate the device

- with connected connectors (even if no lines are connected to the connectors) and
- with connected equipment grounding conductor!

***NOTICE***

**Risk of damage to the device!**

Provide strain relief for the terminals of the device in the control cabinet.

Connectors included in scope of delivery.

### Overview

There are different types of connections:

- Screw connection at device ( ⊘ ).
- Screw connection at connector ( —⊘(▬— ).
- Spring terminal at connector ( —⊃(▬— ).

| Component | PE + XD01 (⏚ L1 L2 L3) | XD01 (L1 L2 L3 ⏚) | XD01 (L1 L2 L3 ⏚) |
|---|---|---|---|
| XCS | 0100, 0120: 35 mm²<br>0150, 0180: 50 mm²<br>02xx: 120 mm²<br>03xx: 2×70 mm² | 0054, 0070, 0090: 16 mm² | 0010, 0023: 10 mm²<br>- |
| XCD | - | - | 2323: 10 mm²<br>- |
| XVR/XLI | 0048: 35 mm²<br>0072: 50 mm²<br>0100: 120 mm² | 0019: 16 mm²<br>- | - |
| XVE | 0075: 50 mm²<br>0125: 2×70 mm² | 0030: 16 mm² | - |

### XD01, mains connection (10 mm²)

Table 63: Function, pin assignment, properties

| View | Identification | Function | |
|---|---|---|---|
| 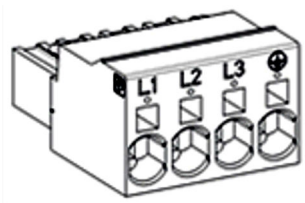 | L1 | Connection to power grid (L1) | |
| | L2 | Connection to power grid (L2) | |
| | L3 | Connection to power grid (L3) | |
| | ⏚ | Equipment grounding conductor connection | |
| | | | |
| **Spring terminal (connector)** | **Unit** | **min.** | **max.** |
| **Connection cable** | mm² | 0.2 | 6 |
| Cross section flexible 1 conductor | AWG | 24 | 10 |
| with ferrule without plastic sleeve | mm² | 0.25 | 6 |
| | AWG | 24 | 10 |
| with ferrule with plastic sleeve | mm² | 0.25 | 4 |
| | AWG | 24 | 12 |
| Cross section flexible 2 conductors | mm² | 0.25 | 1.5 |
| with twin ferrule with plastic sleeve | AWG | 24 | 16 |
| Cross section rigid | mm² | 0.2 | 10 |
| | AWG | 24 | 8 |
| Stripped length | mm | 15 | |
| Occurring current load and minimum required connection cross section | | See technical data of device used ($I_{LN}$ and $A_{LN}$) | |
| Occurring voltage load | | See technical data of device used ($U_{LN}$ or $U_{LN\_nenn}$) | |

### XD01, mains connection (16 mm²)

Table 64: Function, pin assignment, properties

| View | Identification | Function | |
|---|---|---|---|
| 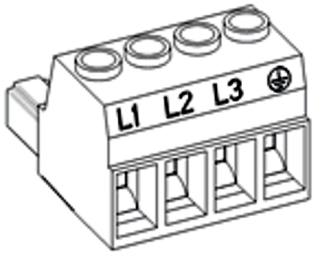  | L1 | Connection to power grid (L1) | |
| | L2 | Connection to power grid (L2) | |
| | L3 | Connection to power grid (L3) | |
| | ⏚ | Equipment grounding conductor connection | |
| | | | |
| **Screw connection at connector** | **Unit** | **min.** | **max.** |
| **Connection cable** | mm² | 0.5 | 16 |
| Cross section flexible | AWG | 20 | 6 |
| With ferrule with/without plastic sleeve | mm² | 0.25 | 16 |
| | AWG | 22 | 6 |
| Cross section rigid | mm² | 0.2 | 16 |
| | AWG | 22 | 6 |
| Stripped length | mm | 12 | |
| Tightening torque | Nm | 1.2 | 2 |
| Occurring current load and minimum required connection cross section | | See technical data of device used ($I_{LN}$ and $A_{LN}$) | |
| Occurring voltage load | | See technical data of device used ($U_{LN}$ or $U_{LN\_nenn}$) | |

### XD01, mains connection (35 mm²)

Table 65: Function, pin assignment, properties

| View | Identification | Function |
|---|---|---|
| 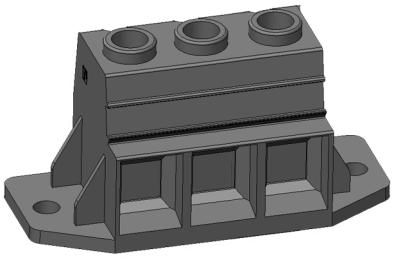 | L1 | Connection to power grid (L1) |
| | L2 | Connection to power grid (L2) |
| | L3 | Connection to power grid (L3) |

| Terminal block | Unit | min. | max. |
|---|---|---|---|
| **Connection cable** | mm² | 0.5 | 35 |
| Cross section flexible 1 conductor | AWG | 20 | 2 |
| with ferrule without plastic sleeve | mm² | 1 | 35 |
| | AWG | 18 | 2 |
| with ferrule with plastic sleeve | mm² | 1.5 | 35 |
| | AWG | 16 | 2 |
| Cross section flexible 2 conductors | mm² | 0.5 | 6 |
| | AWG | 20 | 10 |
| with ferrule without plastic sleeve | mm² | 0.5 | 4 |
| | AWG | 20 | 12 |
| with twin ferrule with plastic sleeve | mm² | 0.5 | 16 |
| | AWG | 20 | 6 |
| Cross section rigid 1 conductor | mm² | 0.5 | 35 |
| | AWG | 20 | 2 |
| Cross section rigid 2 conductors | mm² | 0.5 | 6 |
| | AWG | 20 | 10 |
| Stripped length | mm | 18 | |
| Tightening torque (< 25 mm²) | Nm | 2.5 | |
| Tightening torque (≥ 25 mm²) | Nm | 4.5 | |
| Occurring current load and minimum required connection cross section | | See technical data of device used ($I_{LN}$ and $A_{LN}$) | |
| Occurring voltage load | | See technical data of device used ($U_{LN}$ or $U_{LN\_nenn}$) | |

#### Cable feedthrough 35 mm²

The device comes with a cable feedthrough (R911410689) at **35 mm²** connection points.

| Cable feedthrough |
|---|
| 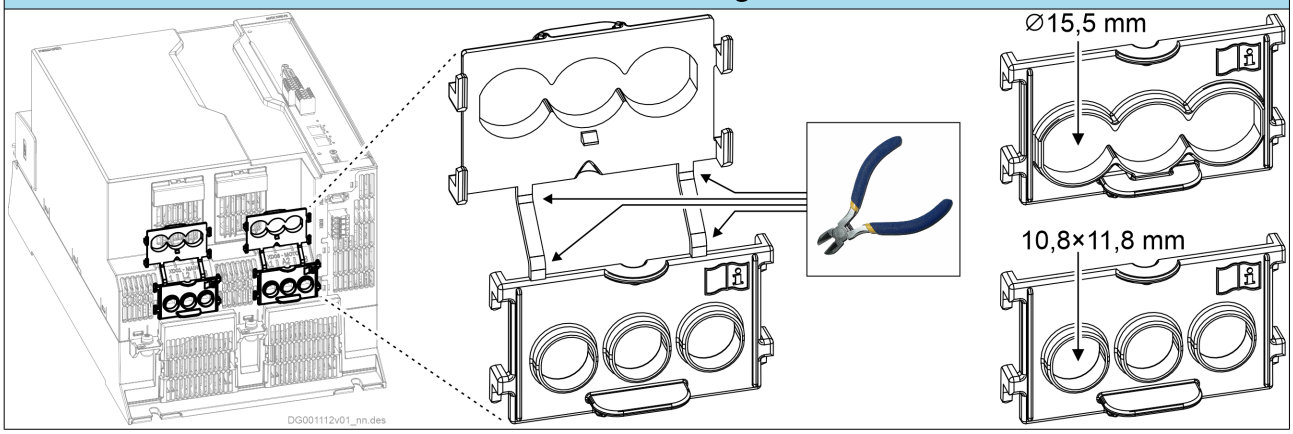 |



| Use | | | |
|---|---|---|---|
| Cable Connection | Opening width [mm] | | |
| | 10.8×11.8 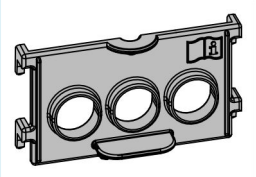 | Ø15.5 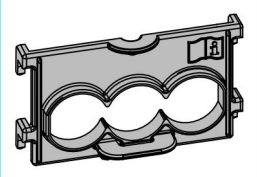 | 44.1×21.4 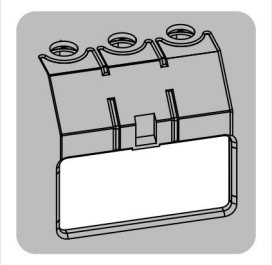 Device; cable feed-through dismounted |
| Ø cable (outer diameter) | 2.5 ... 10.5 mm | 10.6 ... 15 mm | - |
| 1 × with/without ferrule | 1.5 ... 16 mm² AWG16 ... 6 | 25 ... 35 mm² AWG4 ... 2 | - |
| 2 × with twin ferrule | 1.5 ... 4 mm² AWG16 ... 12 | 6 ... 10 mm² AWG10 ... 8 | 16 mm² AWG6 |
| 2 × without ferrule | 1.5 ... 6 mm² AWG16 ... 10 | - | - |
| 2 × with ferrule (without a plastic collar) | 1.5 ... 4 mm² AWG16 ... 12 | - | - |

| Notes for assembly | | |
|---|---|---|
| Opening width 10.8×11.8 is matching | Opening width Ø15.5 is required | No cable feedthrough required |
| Leave the cable feedthrough at the device and remove the excess part of the cable feed-through (e.g. using a wire cutter). | • Dismount cable feedthrough (dismounting: see below).<br>• Remove the excess part of the cable feedthrough (e.g. using a wire cutter).<br>• Assemble cable feedthrough with opening width Ø15.5. | Dismount cable feedthrough (dismounting: see below). |

| Dismounting | |
|---|---|
| 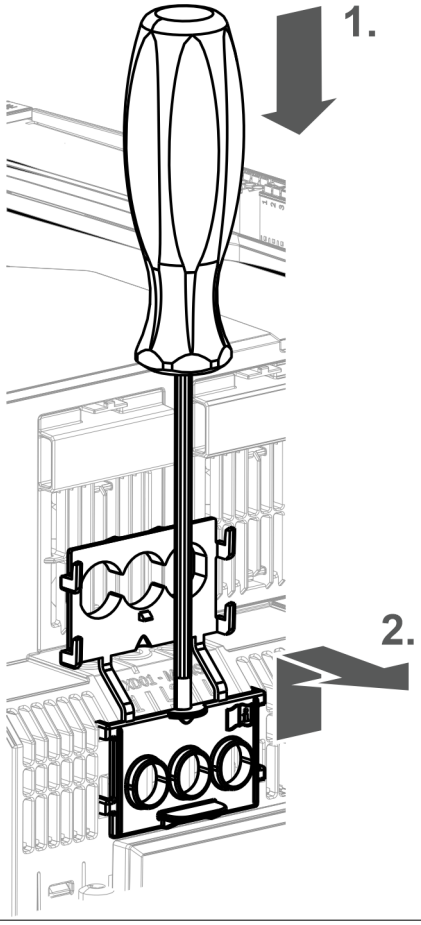 | • Insert the screwdriver (**Torx T20**) into the cable feedthrough and carefully press it down as far as it will go and keep it pressed.<br>• First move the cable feedthrough vertically upwards and subsequently remove it. |

### XD01, mains connection (50 mm²)

Table 66: Function, pin assignment, properties

| View | Identification | Function | |
|---|---|---|---|
| 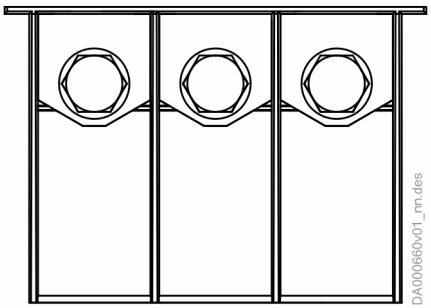  | L1 | Connection to power grid (L1) | |
| | L2 | Connection to power grid (L2) | |
| | L3 | Connection to power grid (L3) | |
| | | | |
| **Terminal block** | **Unit** | **min.** | **max.** |
| Screw thread | | M6 | |
| Tightening torque | Nm | 4 | 5 |
| **Connection cable**<br>flexible with ring cable lug[1)] | mm² | 1×50<br>2×25 | |
| | AWG | 1×1/0 | |
| Occurring current load and minimum required connection cross section | | See technical data of device used ($I_{LN}$ and $A_{LN}$) | |
| Occurring voltage load | | See technical data of device used ($U_{LN}$ or $U_{LN\_nenn}$) | |
| 1) Maximum allowed length of ring cable lug: **38 mm**; insulate ring cable lugs with **heat shrink sleeves**; with a cable cross section of 50 mm², the ring cable lug may not exceed a maximum width of **18 mm** in the contact area (recommendation: use DIN 46234-6-50 ring cable lugs) | | | |

### XD01, mains connection (120 mm²)

Table 67: Function, pin assignment, properties

| View | Identification | Function |
|---|---|---|
| 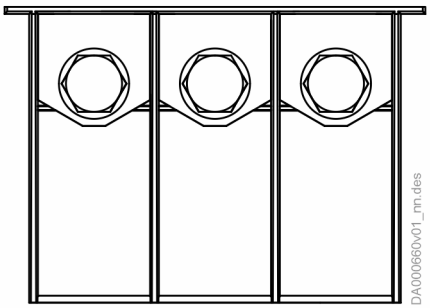  | L1 | Connection to power grid (L1) |
| | L2 | Connection to power grid (L2) |
| | L3 | Connection to power grid (L3) |

| Terminal block | Unit | min. | max. |
|---|---|---|---|
| **Connection cable** | $mm^2$ | 1×16, 2×16 | 1×120, 2×120 |
| Flexible | AWG | 1×6, 2×4 | 1×4/0, 2×4/0 |
| Thread | | M10 | |
| Tightening torque | Nm | 16 | 20 |
| Occurring current load and minimum required connection cross section | | See technical data of device used ($I_{LN}$ and $A_{LN}$) | |
| Occurring voltage load | | See technical data of device used ($U_{LN}$ or $U_{LN\_nenn}$) | |

### XD01, mains connection (2×70 mm²)

Table 68: Function, pin assignment, properties

| View | Identification | Function |
|---|---|---|
| 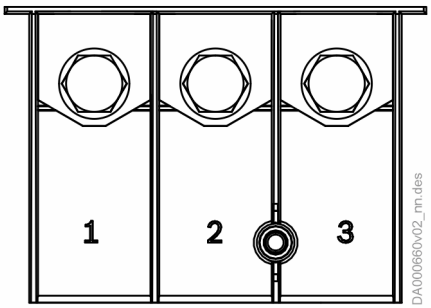 | L1 | Connection to power grid (L1) |
| | L2 | Connection to power grid (L2) |
| | L3 | Connection to power grid (L3) |

| Terminal block | | Unit | min. | max. |
|---|---|---|---|---|
| **Connection cable** | | mm² | 1×16, 2×16 | 1×120, 2×120 |
| Flexible | | AWG | 1×6, 2×4 | 1×4/0, 2×4/0 |
| Thread | | | M10 | |
| Tightening torque | | Nm | 16 | 20 |
| Touch guard:<br>Tightening torque (screw: torx T20, captive) | 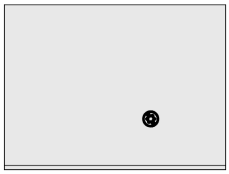 | Nm | - | 2 |
| Occurring current load and minimum required connection cross section | | | See technical data of device used ($I_{LN}$ and $A_{LN}$) | |
| Occurring voltage load | | | See technical data of device used ($U_{LN}$ or $U_{LN\_nenn}$) | |

### XD02, L+ L-, DC bus connection

| ⚠ WARNING | **Lethal electric shock from live parts with more than 50 V!**<br>Before working with live parts: De-energize installation and secure power switch against unintentional or unauthorized reconnection.<br>Before accessing the device, wait at least **30 minutes** after switching off the supply voltages to allow **discharging**.<br>Make sure voltage has fallen below 50 V before touching live parts!<br>**Never operate the drive controller without a touch guard.** |
|---|---|

### Function, pin assignment

The DC bus connection connects

- multiple drive controllers
- a drive controller to a DC bus capacitor unit (to backup the DC bus voltage)

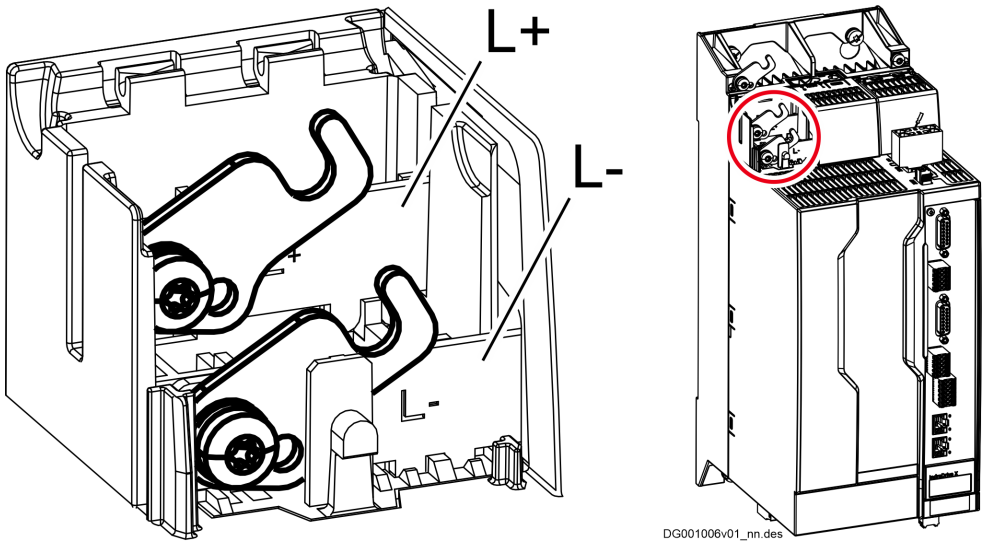


Fig. 48: Claw bolts for DC bus connection

Tightening torque 2.8 Nm

| | |
|---|---|
| Short circuit protection | By fusing elements in the incoming circuit of the mains connection |
| Overload protection | |
| Current carrying capacity | **120 A:**<br>• Drive controllers with a maximum current ≤ 120 A<br>• Supply units with a rated power ≤ 30 kW<br>**300 A:**<br>• Drive controllers with a maximum current ≥ 150 A<br>• Supply units with a rated power ≥ 48 kW |

## Touch guard

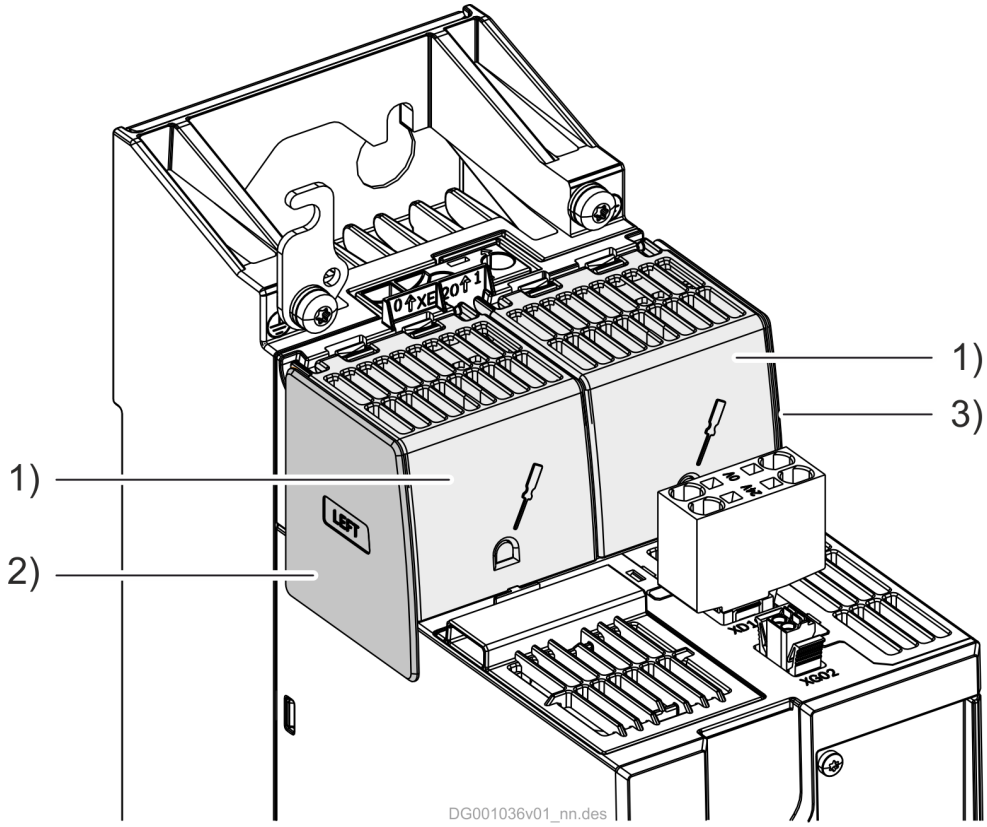


Fig. 49: Touch guard
1) Touch guard cover
2) Touch guard (LEFT; R911400453)
3) Touch guard (RIGHT; R911400452)

By default, these devices are provided with a touch guard.

The touch guard plate may only be removed to connect the DC buses of neighboring devices.

## Disassemble touch guard

1. Unlock and open the touch guard cover.
2. Move the touch guard plate vertically upwards and remove it.

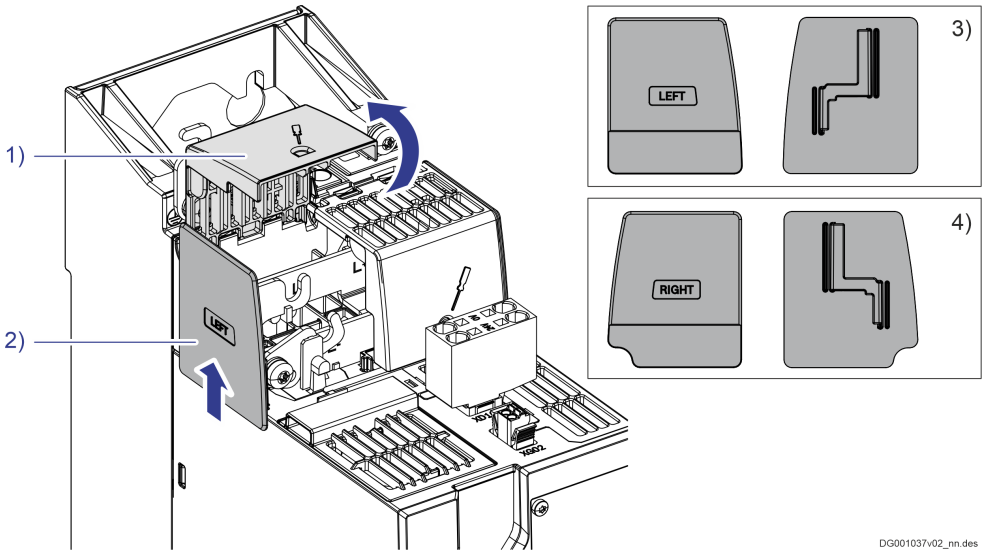


Fig. 50: Touch guard
1) Touch guard cover
2) Touch guard plate
3) Touch guard plate left (front side and back side)
4) Touch guard plate right (front side and back side)

## Axis group

If multiple devices are mounted side by side in the axis group:

1. Before the assembly: Remove all unnecessary touch guard plates.
2. After the assembly: Make sure the touch guard plate has been fitted to the first and last device.

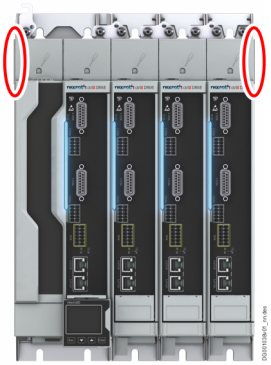

## XD03, motor connection

### Important information

| | |
|---|---|
| ⚠ WARNING | **Lethal electric shock due to live parts with more than 50 V!**<br>Only operate the device<br>– with connected connectors (even if no lines are connected to the connectors) and<br>– with connected equipment grounding conductor! |

| | |
|---|---|
| *NOTICE* | **Risk of damage to the device!**<br>Provide strain relief for the terminals of the device in the control cabinet. |

Connectors **not** included in scope of delivery.

### Installation instructions

The specified connection cross sections are the cross sections that can be connected. Size the **required cross section** of the connection lines according to the occurring current load.

- Provide for optimum shield contact of the motor power cable.
- For the connection between drive controller and motor, use our ready-made motor power cables, where possible.

### Motor connection: Overview

There are different types of connections:

- Screw connection at device ( ⊘ ).
- Screw connection at connector ( —⊘(▬— ).
- Spring terminal at connector ( —⊃(▬— ).

The table below gives an overview of motor connections including the hybrid connection XZ03.

Table 69: Motor connection: Overview

| Component | PE + XD03 (⏚, A1 A2 A3) | XD03 (A1 A2 A3 ⏚) | XZ03[1] (A1 A2 A3 ⏚ 0VBr +24VBr MotTemp- MotTemp+) |
|---|---|---|---|
| XCS | 1×<br>0100, 0120: 35 mm²<br>0150, 0180: 50 mm²<br>02xx: 120 mm²<br>03xx: 2×70 mm² | 1×<br>0054, 0070, 0090: 16 mm² | 1×<br>0010, 0023: 10 mm²<br>- |
| XCD | - | - | 2×<br>0606...2323: 10 mm² |
| XMS | 1×<br>0100, 0120: 35 mm²<br>0150, 0180: 50 mm²<br>02xx: 120 mm²<br>03xx: 2×70 mm² | 1×<br>0054, 0070, 0090: 16 mm² | 1×<br>0006...0036: 10 mm²<br>- |
| XMD | - | 2×<br>W5454, W7070: 16 mm² | 2×<br>0606...3636: 10 mm²<br>- |
| XMQ*-WQ001 | - | 2×<br>W36, W54: 16 mm² | 2×<br>W10, W20: 10 mm² |
| XMQ*-WQ002 | 1×<br>W100: 35 mm² | 2×<br>W36, W70: 16 mm² | 1×<br>W10: 10 mm² |

PE + XD03: screw connection at device
XD03: screw connection at connector
XZ03: spring terminal at connector

1) See ➦ Chapter XZ03, hybrid connection (motor, motor temperature monitoring and motor holding brake) on page 235

### XD03, motor connection (16 mm²)

Table 70: Function, pin assignment, properties

| View | Identification | Function |
|---|---|---|
| 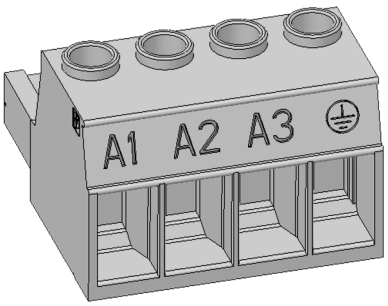  | A1 | For power connection U1 at motor |
| | A2 | For power connection V1 at motor |
| | A3 | For power connection W1 at motor |
| | ⏚ | For equipment grounding connection at motor |

| Screw connection at connector | Unit | min. | max. [1] |
|---|---|---|---|
| **Connection cable** | mm² | 0.75 | 16 |
| Cross section flexible 1 conductor | AWG | 18 | 6 |
| with wire end ferrule without plastics material sleeve | mm² | 0.5 | 16 |
| | AWG | 20 | 6 |
| with wire end ferrule with plastics material sleeve | mm² | 0.5 | 10 |
| | AWG | 20 | 8 |
| Cross section flexible 2 conductors | mm² | 0.75 | 6 |
| | AWG | 18 | 10 |
| with wire end ferrule without plastics material sleeve | mm² | 0.5 | 4 |
| | AWG | 20 | 12 |
| with twin wire end ferrule with plastics material sleeve | mm² | 0.5 | 6 |
| | AWG | 20 | 10 |
| Cross section rigid | mm² | 0.75 | 16 |
| | AWG | 18 | 6 |
| Cross section rigid 2 conductors | mm² | 0.75 | 6 |
| | AWG | 18 | 10 |
| Stripped length | mm | 12 | |
| Tightening torque | Nm | 1.7 | 1.8 |
| Occurring current load and minimum required connection cross section | A | See technical data of device used ($I_{out}$) | |
| Occurring voltage load | V | See technical data of device used ($U_{out}$) | |
| Short circuit protection | | A1, A2, A3 against each other and each of them against ground | |

1) Wire end ferrule only allowed **without** plastic sleeve.

Shield connection accessories:

- XCS*-*0054/70: XAS2-006-003-NN; ➦ Chapter XAS2-006-003-NN on page 50
- XCS*-W0090: XAS2-009-003-NN; ➦ Chapter XAS2-009-003-NN on page 55
- XMS*-*0054/70: XAS2-005-003-NN; ➦ Chapter XAS2-005-003-NN on page 49
- XMS*-W0090: XAS2-005-003-NN; ➦ Chapter XAS2-005-003-NN on page 49

### XD03, motor connection (35 mm²)

| View | Identification | Function |
|---|---|---|
| 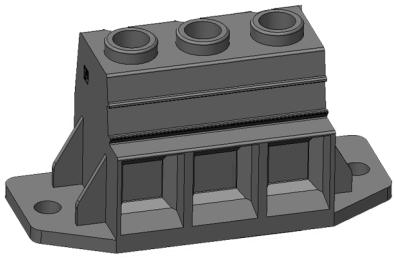 | A1 | For power connection U1 at motor |
| | A2 | For power connection V1 at motor |
| | A3 | For power connection W1 at motor |

| Terminal block | Unit | min. | max. |
|---|---|---|---|
| **Connection cable** | mm² | 0.5 | 35 |
| Cross section flexible 1 conductor | AWG | 20 | 2 |
| with wire end ferrule without plastics material sleeve | mm² | 1 | 35 |
| | AWG | 18 | 2 |
| with wire end ferrule with plastics material sleeve | mm² | 1.5 | 35 |
| | AWG | 16 | 2 |
| Cross section flexible 2 conductors | mm² | 0.5 | 6 |
| | AWG | 20 | 10 |
| with wire end ferrule without plastics material sleeve | mm² | 0.5 | 4 |
| | AWG | 20 | 12 |
| with twin wire end ferrule with plastics material sleeve | mm² | 0.5 | 16 |
| | AWG | 20 | 6 |
| Cross section rigid 1 conductor | mm² | 0.5 | 35 |
| | AWG | 20 | 2 |
| Cross section rigid 2 conductors | mm² | 0.5 | 6 |
| | AWG | 20 | 10 |
| Stripped length | mm | 18 | |
| Tightening torque (< 25 mm²) | Nm | 2.5 | |
| Tightening torque (≥ 25 mm²) | Nm | 4.5 | |
| Occurring current load and minimum required connection cross section | A | See technical data of device used ($I_{out}$) | |
| Occurring voltage load | V | See technical data of device used ($U_{out}$) | |
| Short circuit protection | | A1, A2, A3 against each other and each of them against ground | |

| | |
|---|---|
| **Cable feedthrough** at device: 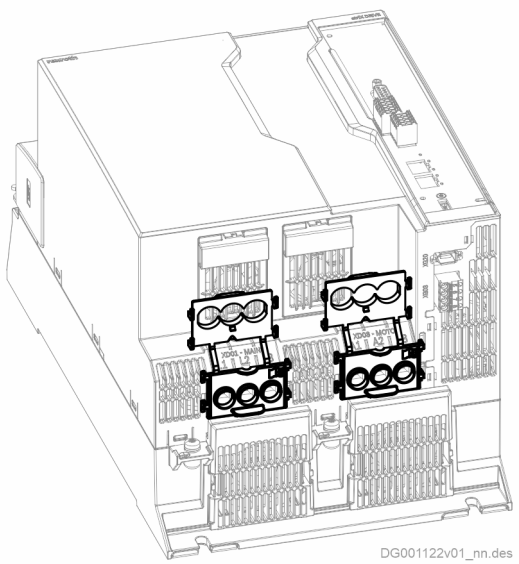  | ➡ Chapter XD01, mains connection (35 mm²) on page 190 |

**Shield connection** accessories:

- XCS*-W0100/120: XAS2-002-003-NN; ➡ Chapter XAS2-002-003-NN on page 45

### XD03, motor connection (50 mm²)

Table 71: Function, pin assignment, properties

| View | Identification | Function |
|---|---|---|
| 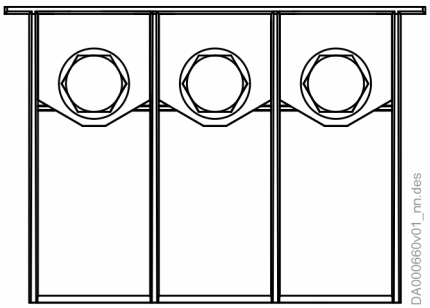 | A1 | For power connection U1 at motor |
| | A2 | For power connection V1 at motor |
| | A3 | For power connection W1 at motor |

| Terminal block | Unit | min. | max. |
|---|---|---|---|
| **Connection cable**<br>flexible with ring cable lug[1)] | mm² | 1×50<br>2×25 | |
| | AWG | 1×1/0 | |
| Screw thread | | M6 | |
| Tightening torque | Nm | 4 | 5 |
| Occurring current load and minimum required connection cross section | | See technical data of device used ($I_{LN}$ and $A_{LN}$) | |
| Occurring voltage load | | See technical data of device used ($U_{LN}$ or $U_{LN\_nenn}$) | |

1) Maximum allowed length of ring cable lug: **38 mm**; insulate ring cable lugs with **heat shrink sleeves**; with a cable cross section of 50 mm², the ring cable lug may not exceed a maximum width of **18 mm** in the contact area (recommendation: use DIN 46234-6-50 ring cable lugs)

Shield connection accessories:

- XCS*-W0150/180:
  - XAS2-007-001-NN; ➡ Chapter XAS2-007-001-NN on page 51
  - XAS2-007-002-NN; ➡ Chapter XAS2-007-002-NN on page 52
- XMS*-W0150/180:
  - XAS2-008-001-NN; ➡ Chapter XAS2-008-001-NN on page 53
  - XAS2-008-002-NN; ➡ Chapter XAS2-008-002-NN on page 54

### XD03, motor connection (120 mm²)

Table 72: Function, pin assignment, properties

| View | Identification | Function | |
|---|---|---|---|
| 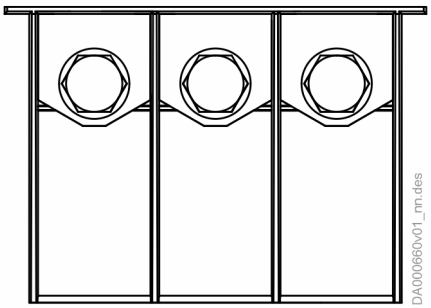  | A1 | For power connection U1 at motor | |
| | A2 | For power connection V1 at motor | |
| | A3 | For power connection W1 at motor | |
| | | | |
| **Terminal block** | **Unit** | **min.** | **max.** |
| **Connection cable** | mm² | 1×16, 2×16 | 1×120, 2×120 |
| flexible with ring cable lug[1)] | AWG | 1×6, 2×6 | 1×4/0, 2×4/0 |
| Screw thread | | M10 | |
| Tightening torque | Nm | 16 | 20 |
| Occurring current load and minimum required connection cross section | | See technical data of device used ($I_{LN}$ and $A_{LN}$) | |
| Occurring voltage load | | See technical data of device used ($U_{LN}$ or $U_{LN\_nenn}$) | |
| 1) Insulate ring cable lugs with heat shrink sleeves | | | |

Shield connection accessories:

- XCS*/XMS*-W0210/250/280/330/375:
  - XAS2-004-001-NN; ➦ Chapter XAS2-004-001-NN on page 47
  - XAS2-004-002-NN; ➦ Chapter XAS2-004-002-NN on page 48

### XD03, motor connection (2×70 mm²)

Table 73: Function, pin assignment, properties

| View | Identification | Function | |
|---|---|---|---|
| 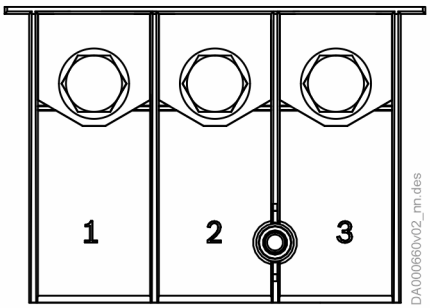 | A1 | For power connection U1 at motor | |
| | A2 | For power connection V1 at motor | |
| | A3 | For power connection W1 at motor | |
| | | | |
| **Terminal block** | **Unit** | **min.** | **max.** |
| **Connection cable** | mm² | 1×16, 2×16 | 1×120, 2×120 |
| flexible with ring cable lug[1)] | AWG | 1×6, 2×4 | 1×4/0, 2×4/0 |
| Thread | | M10 | |
| Tightening torque | Nm | 16 | 20 |
| Touch guard:<br>Tightening torque (screw: torx T20, captive) 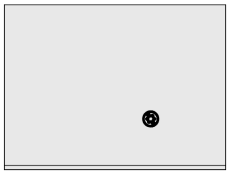 | Nm | - | 2 |
| Occurring current load and minimum required connection cross section | | See technical data of device used ($I_{LN}$ and $A_{LN}$) | |
| Occurring voltage load | | See technical data of device used ($U_{LN}$ or $U_{LN\_nenn}$) | |
| | | | 1) Insulate ring cable lugs with heat shrink sleeves |

Shield connection accessories:

- XCS*/XMS*-W0210/250/280/330/375:
  - XAS2-004-001-NN; ➦ Chapter XAS2-004-001-NN on page 47
  - XAS2-004-002-NN; ➦ Chapter XAS2-004-002-NN on page 48

### XD03, mains XLI-XVR (XVR*-W0019, XLI1-1R-W0019)

The connection point is used to connect a **regenerative** supply unit to the mains connection module XLI.

| View | Identification | Function |
|---|---|---|
| 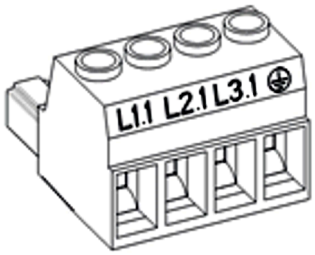  | L1.1 | Connection between supply unit and mains connection module |
| | L2.1 | |
| | L3.1 | |
| | ⏚ | |

| Screw connection at connector | Unit | min. | max. |
|---|---|---|---|
| **Connection cable** | mm² | 0.75 | 16 |
| Cross section flexible 1 conductor | AWG | 18 | 6 |
| with ferrule without plastic sleeve | mm² | 0.5 | 16 |
| | AWG | 20 | 6 |
| with ferrule with plastic sleeve | mm² | 0.5 | 10 |
| | AWG | 20 | 8 |
| Cross section flexible 2 conductors | mm² | 0.75 | 6 |
| | AWG | 18 | 10 |
| with ferrule without plastic sleeve | mm² | 0.5 | 4 |
| | AWG | 20 | 12 |
| with twin ferrule with plastic sleeve | mm² | 0.5 | 6 |
| | AWG | 20 | 10 |
| Cross section rigid 1 conductor | mm² | 0.75 | 16 |
| | AWG | 18 | 6 |
| Cross section rigid 2 conductors | mm² | 0.75 | 6 |
| | AWG | 18 | 10 |
| Stripped length | mm | 12 | |
| Tightening torque | Nm | 1.7 | 1.8 |
| Occurring current load and minimum required connection cross section | | See technical data of device used ($I_{LN}$ and $A_{LN}$) | |
| Occurring voltage load | | See technical data of device used ($U_{LN}$ or $U_{LN\_nenn}$) | |

### XD03, mains XLI-XVR (XVR*-W0048, XLI1-1R-W0048)

The connection point is used to connect a **regenerative** supply unit to the mains connection module XLI.

Table 74: Function, pin assignment, properties

| View | Identification | Function | |
|---|---|---|---|
| 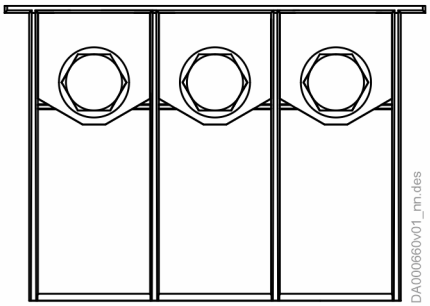  | L1.1<br>L2.1<br>L3.1 | Connection between supply unit and mains connection module | |
| | | | |
| **Terminal block** | **Unit** | **min.** | **max.** |
| Screw thread | | M6 | |
| Tightening torque | Nm | 4 | 5 |
| **Connection cable**<br>flexible with ring cable lug[1)] | $mm^2$ | 1×35<br>2×16 | |
| | AWG | 1×3 | |
| Occurring current load and minimum required connection cross section | | See technical data of device used ($I_{LN}$ and $A_{LN}$) | |
| Occurring voltage load | | See technical data of device used ($U_{LN}$ or $U_{LN\_nenn}$) | |
| 1) Maximum allowed length of ring cable lug: **38 mm**; insulate ring cable lugs with **heat shrink sleeves** | | | |

### XD03, mains XLI-XVR (XVR*-W0072, XLI*-1R-W0072)

The connection point is used to connect a **regenerative** supply unit to the mains connection module XLI.

Table 75: Function, pin assignment, properties

| View | Identification | Function | |
|---|---|---|---|
| 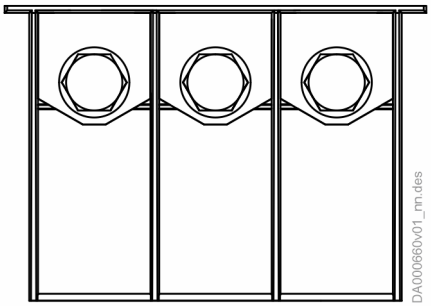  | L1.1<br>L2.1<br>L3.1 | Connection between supply unit and mains connection module | |
| | | | |
| **Terminal block** | **Unit** | **min.** | **max.** |
| Screw thread | | M6 | |
| Tightening torque | Nm | 4 | 5 |
| **Connection cable**<br>flexible with ring cable lug[1)] | $mm^2$ | 1×50<br>2×25 | |
| | AWG | 1×1/0 | |
| Occurring current load and minimum required connection cross section | | See technical data of device used ($I_{LN}$ and $A_{LN}$) | |
| Occurring voltage load | | See technical data of device used ($U_{LN}$ or $U_{LN\_nenn}$) | |
| 1) Maximum allowed length of ring cable lug: **38 mm**; insulate ring cable lugs with **heat shrink sleeves**; with a cable cross section of 50 $mm^2$, the ring cable lug may not exceed a maximum width of **18 mm** in the contact area (recommendation: use DIN 46234-6-50 ring cable lugs) | | | |

### XD03, mains XLI-XVR (XVR*-W0100, XLI*-1R-W0100)

The connection point is used to connect a **regenerative** supply unit to the mains connection module XLI.

Table 76: Function, pin assignment, properties

| View | Identification | Function |
|---|---|---|
| 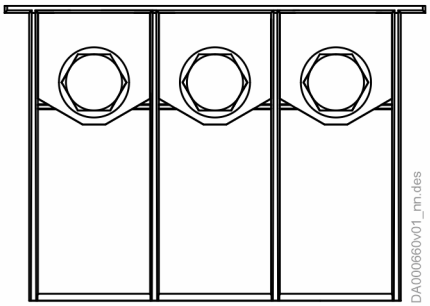  | L1.1<br>L2.1<br>L3.1 | Connection between supply unit and mains connection module |

| Terminal block | Unit | min. | max. |
|---|---|---|---|
| Screw thread | | M10 | |
| Tightening torque | Nm | 16 | 20 |
| **Connection cable** | $mm^2$ | 1×16, 2×16 | 1×120, 2×120 |
| flexible with ring cable lug[1)] | AWG | 1×6, 2×4 | 1×4/0, 2×4/0 |
| Occurring current load and minimum required connection cross section | | See technical data of device used ($I_{LN}$ and $A_{LN}$) | |
| Occurring voltage load | | See technical data of device used ($U_{LN}$ or $U_{LN\_nenn}$) | |

1) Maximum allowed length of ring cable lug: 38 mm

## XD04, external braking resistor

### Important information

| ⚠ WARNING | **Lethal electric shock due to live parts with more than 50 V!**<br>Only operate the device<br>– with connected connectors (even if no lines are connected to the connectors) and<br>– with connected equipment grounding conductor! |
|---|---|

Connectors included in scope of delivery.

### Function

Is used to connect the integrated or external braking resistor **HLR**. The braking resistor is connected to the DC bus via an internal switch.

### Installation instructions

- Maximum allowed line length to external braking resistor: **5 m**
- Use **shielded** lines
- Connect shield **at both ends** over the largest possible surface area (on the drive side, with a cable clip at the mounting plate in the control cabinet, for example)

| ⚠ WARNING | **Lethal electric shock from live parts with more than 50 V! Risk of burns by hot housing surfaces! Risk of fire!**<br>The temperature of the housing surface of an external HLR braking resistor can rise up to 150 °C. Run the connection lines with a sufficient distance (> 200 mm) to the housing of the HLR braking resistor to avoid damaging the insulation of the connection lines. Outside of the control cabinet, run the connection lines of an HLR braking resistor in a metal pipe with a wall thickness of at least 1 mm.<br>Do not touch any hot housing surfaces! Mount the HLR braking resistor on a temperature-resistant mounting surface. Provide a sufficient distance between the HLR braking resistor and heat-sensitive materials. Make sure the cooling air supply is unrestricted. Take care that the environment can discharge the dissipation heat. |
|---|---|

| NOTICE | **Danger by inadequate installation!**<br>Protect the lines with the appropriate fusing elements in the supply feeder.<br>For the connection lines at XD04, use at least the cross section of the lines for mains connection at XD03. If this is impossible, select the cross section of the connection line at XD04 in accordance with the continuous power of the braking resistor.<br>With a smaller cross section of the connection line at XD04, the fusing element is not required if the following conditions have been fulfilled:<br>– Distance of external braking resistor connection (XD04) to mains fuse < 3 m<br>– Cross section of the connection line at XD04 in accordance with the continuous power of the braking resistor<br>– Short-circuit and ground-fault-proof routing (cf. VDE 0100-520)<br>Selecting the fusing element (only required if braking resistor line cross section < mains connection line):<br>The connection lines of the braking resistor carry high DC voltages (up to 850 V DC). Therefore, select the fusing element according to this DC voltage.<br>Use fusing elements, e.g. fuses of characteristic gG, or circuit breakers with tripping characteristics C:<br>– Nominal fuse voltage ≥ 850 V DC<br>– Nominal fuse current complies with continuous current of external braking resistor (check overload capacity of fuse with regard to the specific application)<br>– Sizing depends on cross section of braking resistor line that is used, in accordance with the respective applicable national standards and local regulations<br>Do not use any fast semiconductor fuses, since they might trigger in the range of standard operation. |
|---|---|

**Overview**

There are different types of connections:

- Screw connection at device ( ⊘ ).
- Screw connection at connector ( —⊘(▬— ).
- Spring terminal at connector ( —⊃(▬— ).

| Component | XD04<br>PE 2 1 | XD04<br>1 2 | XD04<br>1 2 |
|---|---|---|---|
| XCS | 02xx, 03xx:<br>35 mm² | 0090, 01xx:<br>16 mm² | 0010, 0023, 0054, 0070:<br>10 mm²<br>0054, 0070:<br>10 mm² |
| XCD | - | - | 2323:<br>10 mm² |
| XVR/XLI | 0100:<br>35 mm² | 0048, 0072:<br>16 mm² | 0019:<br>10 mm² |
| XVE | 0125:<br>35 mm² | 0030, 0075:<br>16 mm² | - |

### XD04 (10 mm²)

Table 77: Function, pin assignment, properties

| View | Connection | Function | |
|---|---|---|---|
| 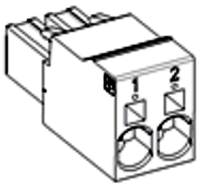 | 1 | Braking resistor connection | |
| | 2 | Braking resistor connection | |
| | | | |
| **Spring terminal (connector)** | **Unit** | **min.** | **max.** |
| **Connection cable** | mm² | 0.2 | 6 |
| Cross section flexible 1 conductor | AWG | 24 | 10 |
| with ferrule without plastic sleeve | mm² | 0.25 | 6 |
| | AWG | 24 | 10 |
| with ferrule with plastic sleeve | mm² | 0.25 | 4 |
| | AWG | 24 | 12 |
| Cross section flexible 2 conductors | mm² | 0.25 | 1.5 |
| with twin ferrule with plastic sleeve | AWG | 24 | 16 |
| Cross section rigid | mm² | 0.2 | 10 |
| | AWG | 24 | 8 |
| Stripped length | mm | 15 | |

### XD04 (16 mm²)

Table 78: Function, pin assignment, properties

| View | Connection | Function | |
|---|---|---|---|
| 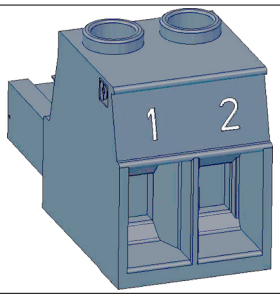  | 1 | Braking resistor connection | |
| | 2 | Braking resistor connection | |
| | | | |
| **Screw connection at connector** | **Unit** | **min.** | **max.** |
| **Connection cable** | mm² | 0.75 | 16 |
| Cross section flexible 1 conductor | AWG | 18 | 6 |
| with ferrule without plastic sleeve | mm² | 0.5 | 16 |
| | AWG | 20 | 6 |
| with ferrule with plastic sleeve | mm² | 0.5 | 10 |
| | AWG | 20 | 8 |
| Cross section flexible 2 conductors | mm² | 0.75 | 6 |
| | AWG | 18 | 10 |
| with ferrule without plastic sleeve | mm² | 0.5 | 4 |
| | AWG | 20 | 12 |
| with twin ferrule with plastic sleeve | mm² | 0.5 | 6 |
| | AWG | 20 | 10 |
| Cross section rigid 1 conductor | mm² | 0.75 | 16 |
| | AWG | 18 | 6 |
| Cross section rigid 2 conductors | mm² | 0.75 | 6 |
| | AWG | 18 | 10 |
| Stripped length | mm | 12 | |
| Tightening torque | Nm | 1.7 | 1.8 |

### XD04 (35 mm²)

| View | Identification | Function |
|---|---|---|
| 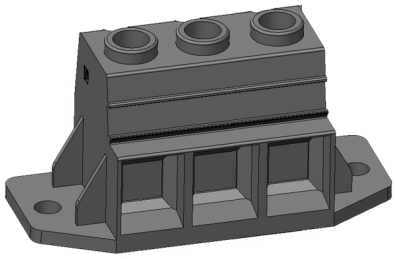 | PE | Equipment grounding conductor |
| | 2 | Braking resistor |
| | 1 | Braking resistor |

| Terminal block | Unit | min. | max. |
|---|---|---|---|
| **Connection cable** | mm² | 0.5 | 35 |
| Cross section flexible 1 conductor | AWG | 20 | 2 |
| with ferrule without plastic sleeve | mm² | 1 | 35 |
| | AWG | 18 | 2 |
| with ferrule with plastic sleeve | mm² | 1.5 | 35 |
| | AWG | 16 | 2 |
| Cross section flexible 2 conductors | mm² | 0.5 | 6 |
| | AWG | 20 | 10 |
| with ferrule without plastic sleeve | mm² | 0.5 | 4 |
| | AWG | 20 | 12 |
| with twin ferrule with plastic sleeve | mm² | 0.5 | 16 |
| | AWG | 20 | 6 |
| Cross section rigid 1 conductor | mm² | 0.5 | 35 |
| | AWG | 20 | 2 |
| Cross section rigid 2 conductors | mm² | 0.5 | 6 |
| | AWG | 20 | 10 |
| Stripped length | mm | 18 | |
| Tightening torque (< 25 mm²) | Nm | 2.5 | |
| Tightening torque (≥ 25 mm²) | Nm | 4.5 | |

## XD10, 24 V supply (control voltage)

### Function, pin assignment

Via the connection point, the 24 V supply is applied externally for

- the control section and power section of the drive controller
- the brake control
- the digital inputs and the digital output

Connectors included in scope of delivery.

Table 79: Function, pin assignment, properties

| View | Connection | Signal name | Function |
|---|---|---|---|
| 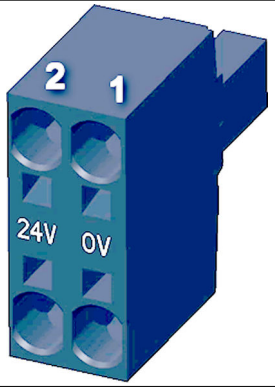 | 1 | 0V | Reference potential for power supply |
| | 2 | +24V | Power supply |
| | | | |
| **Spring terminal at connector** | **Unit** | **min.** | **max.** |
| **Connection cable** | mm² | 0.2 | 6 |
| Cross section flexible 1 conductor | AWG | 24 | 10 |
| with ferrule without plastic sleeve | mm² | 0.25 | 6 |
| | AWG | 24 | 10 |
| with ferrule with plastic sleeve | mm² | 0.25 | 4 |
| | AWG | 24 | 12 |
| Cross section flexible 2 conductors | mm² | 0.25 | 1.5 |
| with twin ferrule with plastic sleeve | AWG | 24 | 16 |
| Cross section rigid 1 conductor | mm² | 0.2 | 10 |
| | AWG | 24 | 8 |
| Stripped length | mm | 15 | |
| Power consumption | W | $P_{N3}$ (see control voltage data) | |
| Voltage load capacity | V | $U_{N3}$ (see control voltage data) | |
| **Current carrying capacity "looping through"** from 0V to 0V, 24V to 24V | A | 41 | |
| Polarity reversal protection | | Within the allowed voltage range by internal protective diode | |
| Insulation monitoring | | Possible | |

### Installation instructions

Requirements on the connection for 24 V supply:

- Minimum cross section: 1 mm²
- Maximum allowed inductance: 100 µH (2 twisted single strands, 75 m long)
- Parallel line routing where possible

Depending on the power consumption of the devices and the current carrying capacity of the connector, check the number of devices via which a line for 24 V supply can be looped through. If required, connect another device directly to the 24 V supply and then loop through the control voltage from this device to other devices.

### XE20, Y capacitor ground connection

Leave XE20 in its condition as supplied until Rexroth has given you approval for using it.

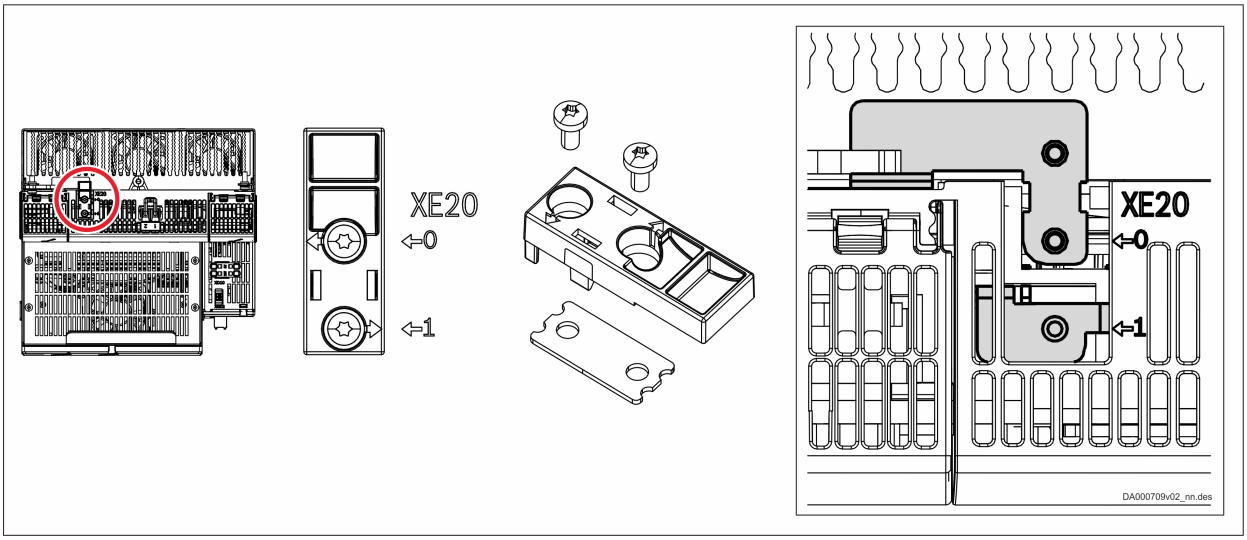


Fig. 51: XE20, Y capacitor ground connection

| With ground connection | Without ground connection |
|---|---|
| 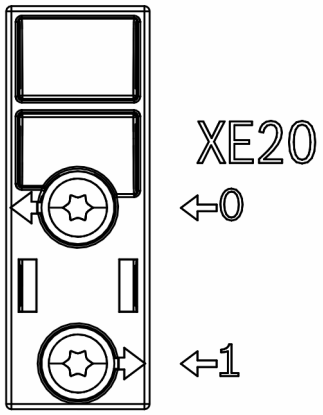  Condition as supplied | 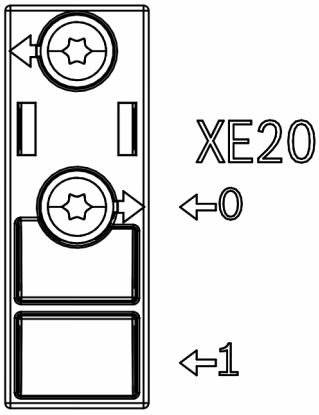  |

### XF21 P1, XF22 P2, communication (M8)

#### Description

The connection point complies with IEEE 802.3 standard.

#### P1, P2

P1 means port 1 and P2 means port 2 etc.. Thus, the error counter of the firmware can be directly assigned to a port.

#### Connection

Sercos:

- Input: arbitrary
- Output: arbitrary

EtherCAT:

- Input: XF21 P1
- Output: XF22 P2

Table 80: Function, pin assignment, properties

| View | Connection | Signal name | Function |
|---|---|---|---|
| 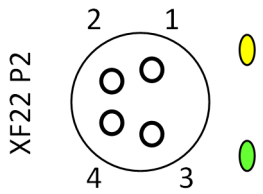 | 1 | TD+ | Transmit, Differential Output + |
| | 2 | RD+ | Receive, Differential Input + |
| | 3 | RD- | Receive, Differential Input - |
| | 4 | TD- | Transmit, Differential Output - |
| 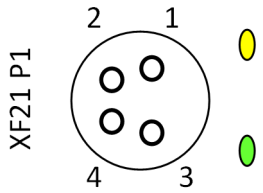 | Housing | | Shield connection |
| **Properties** | | | |
| | • Coupling, inside thread (tightening torque: 0.4 Nm)<br>• M8<br>• Female connector<br>• 4-pin<br>• A-coded | | |
| Compatibility | 100Base-TX according to IEEE 802.3u | | |
| Recommended cable type | tbd | | |

### XF21 P1, XF22 P2, communication (RJ-45)

#### Description

The connection point complies with IEEE 802.3 standard.

#### P1, P2

P1 means port 1 and P2 means port 2 etc.. Thus, the error counter of the firmware can be directly assigned to a port.

#### Connection

Sercos:

- Input: arbitrary
- Output: arbitrary

EtherCAT:

- Input: XF21 P1
- Output: XF22 P2

PROFINET IO:

- Input: arbitrary
- Output: arbitrary

Table 81: Function, pin assignment, properties

| View | Connection | Signal name | Function |
|---|---|---|---|
| 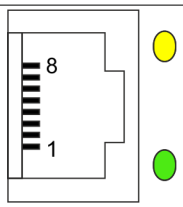 XF22 P2 | 8 | n. c. | - |
| | 7 | n. c. | - |
| | 6 | RD- | Receive, Differential Input - |
| | 5 | n. c. | - |
| | 4 | n. c. | - |
| | 3 | RD+ | Receive, Differential Input + |
| | 2 | TD- | Transmit, Differential Output - |
| | 1 | TD+ | Transmit, Differential Output + |
| 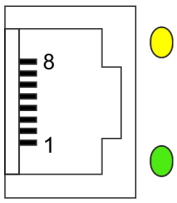 XF21 P1 | Housing | | Shield connection |
| **Properties** | | | |
| Standard | • Ethernet<br>• Type: RJ-45, 8-pin | | |

| | |
|---|---|
| Compatibility | 100Base-TX according to IEEE 802.3u |
| Recommended cable type | ● According to **CAT5e**; shield type ITP (Industrial Twisted Pair)<br>● Ready-made cables available for order:<br>– **RKB0021**<br>Long cables (100 m at most) to connect the drive system to the higher-level control unit or remote communication nodes.<br>Minimum bending radius:<br>48.75 mm with flexible routing<br>32.50 mm with permanent installation<br>Order code for a cable with a length of 30 m: RKB0021/030,0<br>– **RKB0013**<br>Short cables to connect adjacent devices in the control cabinet.<br>Lenghts:<br>0.19 m; 0.25 m; 0.35 m; 0.55 m; 1 m; 1.25 m; 2 m; 3 m; 5 m; 7 m<br>Order code for a cable with a length of 0.55 m: RKB0013/00,55<br>Minimum bending radius: 30.75 mm |

### XG02, Bb relay contact

Table 82: Function, pin assignment, properties

| View | Connection | Signal name | Function |
|---|---|---|---|
| 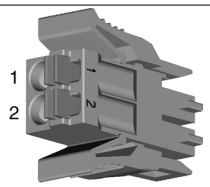  | 1 | Rel1 | Bb relay contact signals:<br>● Readiness for operation<br>● Inverter power enable |
| | 2 | Rel2 | |
| | | | |
| **Spring terminal (connector)** | **Unit** | **min.** | **max.** |
| **Connection cable** | mm² | 0.2 | 1.5 |
| Cross section flexible | AWG | 24 | 16 |
| with ferrule without plastic sleeve | mm² | 0.25 | 1.5 |
| | AWG | 24 | 16 |
| with ferrule with plastic sleeve | mm² | 0.14 | 0.75 |
| | AWG | 26 | 18 |
| Cross section rigid | mm² | 0.2 | 1.5 |
| | AWG | 24 | 16 |
| Stripped length | mm | 10 | |
| Loading capacity of the contacts | V | | 30 |
| | A | 0.01 | 1 |

Connectors included in scope of delivery.

## XG03, motor temperature monitoring and motor holding brake

### Important information

| ⚠ WARNING | **Dangerous movements! Danger to persons from falling or dropping axes!**<br>The standard equipment motor holding brake or an external holding brake controlled by the drive controller is not sufficient to guarantee personal safety!<br>Personal safety must be achieved using higher-ranking, fail-safe measures:<br>– Block off danger zones with safety fences or safety guards.<br>– Additionally secure vertical axes against falling or dropping after switching off the motor power by, for example,<br>  – mechanically securing the vertical axes<br>  – external braking/arrester/clamping mechanism<br>  – ensuring sufficient counterweight for the vertical axes |
|---|---|

| ⚠ WARNING | **Lethal electric shock from live parts with more than 50 V!**<br>The input of the motor temperature evaluation is **not** galvanically isolated from the housing. Excess voltage at the input (e.g., by the motor winding voltage flashing over) can get to the housing. Make sure that the temperature sensor of the connected motor is **double**-insulated from the motor winding. |
|---|---|

| NOTICE | **Risk of damage to device from excess voltage at motor temperature evaluation input!**<br>Only the allowed control voltage for the device is allowed at the motor temperature evaluation input. Excess voltage at the input may damage the device. |
|---|---|

Motor holding brake: Installation instructions

Make sure the **power supply** is sufficient for the motor holding brake at the motor. Take into account that voltage drops on the supply line. Use connection lines with the largest possible cross section of single strands.

Use an **external contact element in accordance with the required safety category** if you wish to supply motor holding brakes with higher currents than the current load allowed at the connection point. Make sure to comply with the required minimum current consumption of 100 mA when using an external contact element. Otherwise, the brake current monitoring function will signal an error.

### Function

The connection point contains the connections for

- monitoring the motor temperature
- controlling the motor holding brake

**Overview**

Spring terminal at connector ( ⟶⊂▬— ).

| Component | XG03 (2.5 mm², 2 A) 5 6 7 8 | XG03 (1.5 mm², 1.5 A) 5 6 7 8 | XZ03[1] (1.5 mm², 1 A) 5 6 7 8 |
|---|---|---|---|
| XCS | 0100...0375[2] | 0054...0090[3] | 0010, 0023[3] |
| XCD | - | - | 2323[3] |
| XMS | 0100...0375[2] | 0054...0090[3] | 0006...0036[3] |
| XMD | - | 5454...7070[3] | 0606...3636[3] |
| XMQ*-WQ001 | - | 2× | 2× |
| XMQ*-WQ002 | 1× | 2× | 1× |

1) Hybrid connection (motor, temperature monitoring and motor holding brake)
2) Connectors included in the scope of supply
3) Connectors **not** included in the scope of supply

### XG03 (2.5 mm²)

Table 83: Function, pin assignment

| View | Connection | Signal name | Function |
|---|---|---|---|
| 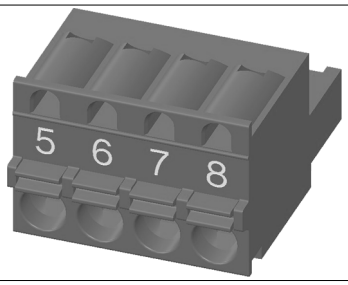 | 5 | MotTemp+ | Input |
| | 6 | MotTemp- | Motor temperature evaluation |
| | 7 | +24VBr | Output |
| | 8 | 0VBr | controlling the motor holding brake |

| Spring terminal (connector) | Unit | min. | max. |
|---|---|---|---|
| **Connection cable** | mm² | 0.2 | 2.5 |
| Cross section flexible 1 conductor | AWG | 24 | 14 |
| with wire end ferrule with/without plastics material sleeve | mm² | 0.25 | 2.5 |
| | AWG | 24 | 14 |
| Cross section flexible 2 conductors | mm² | 0.5 | 1.5 |
| with twin wire end ferrule with plastics material sleeve | AWG | 20 | 16 |
| Cross section rigid | mm² | 0.2 | 2.5 |
| | AWG | 24 | 14 |
| Stripped length | mm | 10 | |
| Current carrying capacity of outputs XG03 | A | - | 2 |
| Time constant of load | ms | - | 50 |
| Number of switching actions at maximum time constant of load | | Wear-free electronic contact | |
| Switching frequency | Hz | - | 0.5 |
| Short circuit protection | | XG03.7 against XG03.8 (output for controlling the motor holding brake) | |
| Overload protection | | | |

**XG03 (1.5 mm²)**

Table 84: Function, pin assignment

| View | Connection | Signal name | Function |
|---|---|---|---|
| 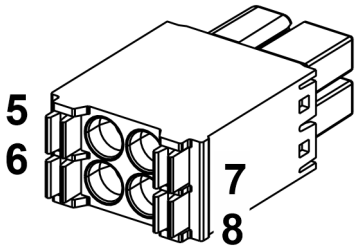 | 5 | MotTemp+ | Input<br>Motor temperature evaluation |
| | 6 | MotTemp- | |
| | 7 | +24VBr | Output<br>controlling the motor holding brake |
| | 8 | 0VBr | |

| Spring terminal (connector) | Unit | min. | max. |
|---|---|---|---|
| **Connection cable** | mm² | 0.2 | 1.5 |
| Cross section flexible | AWG | 24 | 16 |
| with wire end ferrule without plastics material sleeve | mm² | 0.25 | 1.5 |
| | AWG | 24 | 16 |
| with wire end ferrule with plastics material sleeve | mm² | 0.14 | 0.75 |
| | AWG | 26 | 18 |
| Cross section rigid | mm² | 0.2 | 1.5 |
| | AWG | 24 | 16 |
| Stripped length | mm | 10 | |
| Current carrying capacity of outputs XG03 | A | - | 1.5 |
| Time constant of load | ms | - | 50 |
| Number of switching actions at maximum time constant of load | | Wear-free electronic contact | |
| Switching frequency | Hz | - | 0.5 |
| Short circuit protection | | XG03.7 against XG03.8 (output for controlling the motor holding brake) | |
| Overload protection | | | |

### XZ03 (1.5 mm²)

See description of connection point XZ03.

➦ Chapter XZ03, hybrid connection (motor, motor temperature monitoring and motor holding brake) on page 235.

### XG20, XLI bus

#### Function, pin assignment

The connection point is used to connect the supply unit to the mains connection module XLI.

**Connection cable** contained in XLI scope of supply:

- **XLI1-1R-W0019/48/72**
  RG2-500AAB-NN-000,5; length incl. connector: **0.5 m**; R911403093
- **XLI1-1R-W0100**
  RG2-500AAB-NN-000,8; length incl. connector: **0.8 m**; R911407458

Table 85: XG20, XLI bus

| View | Connection | Function |
|---|---|---|
| 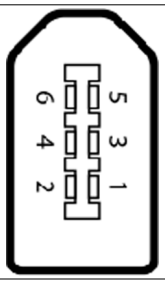 | 1 | Communication |
| | 2 | |
| | 3 | |
| | 4 | |
| | 5 | |
| | 6 | |

| Properties | Unit | min. | max. |
|---|---|---|---|
| **Connection cable**<br>Stranded wire | $mm^2$ | 0.25 | 0.8 |
| Type | | RG2-500AAB | |

### XG20, digital motor encoder connection

Table 86: XG20, digital motor encoder

| View | Connection | Signal name | Function |
|---|---|---|---|
| 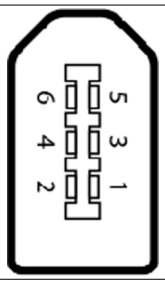  | 1 | n.c. | - |
| | 2 | GND_Enc | Reference potential for power supplies |
| | 3 | +12V_Enc | Encoder supply 12 V |
| | 4 | n.c. | - |
| | 5 | Enc_Data+ | Data transfer positive |
| | 6 | Enc_Data- | Data transfer negative |
| | | | |
| **Properties** | **Unit** | **min.** | **max.** |
| **Connection cable**<br>Stranded wire | $mm^2$ | 0.25 | 0.5 |
| Encoder evaluation type | ACURO®link | | |
| | ctrlX SENSEmotor | | |

Connectors/cables **not** included in scope of delivery.

Table 87: Encoder connection

| | |
|---|---|
| 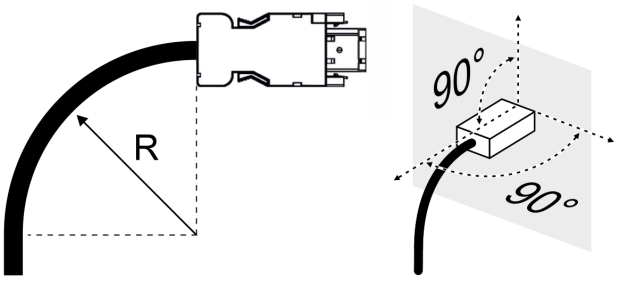  | **R ≈ 30 mm**<br>Minimum bending radius (4 × outer cable diameter) |
| | **90°**<br>For permanently stable contact, the connector has to be in a vertical position.<br>Install a **strain relief** so that no force is applied to the connector. |

#### Encoder connection for hybrid cables

Hybrid cables (e.g., RHB2-021DCB) connect the drive controller to the motor (XZ03) and encoder (XG20).

Form a loop to lead the encoder cable to the connection point XG20 so that no force is applied to the encoder connector:

Fig. 52: Encoder cable forming a loop to be led to connection point XG20

Table 88: Disconnecting the plug connection

| | |
|---|---|
| 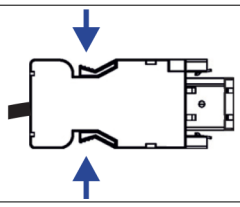 | Press and hold the buttons at the sides of the connector. |
| 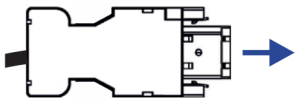 | Push the connector in plug-in direction. |
| | Disconnect the connector. |

### XG31, digital inputs, digital outputs, analog input

Table 89: Function, pin assignment, properties

| View | Connection | Signal name | Function | Default assignment |
|---|---|---|---|---|
| 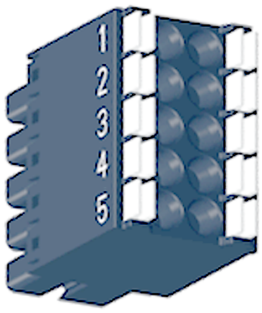 | 1 | I_1 | Digital input (type B) | Probe 1 |
| | 2 | I_2 | | Probe 2 |
| | 3 | I_3 | Digital input | E-Stop input |
| | 4 | 0V | GND reference | - |
| | 5 | 0V_EA_100_AnaIn | Analog input<br>Connection for inner cable shield | - |
| | 6 | I_4 | Digital input | Travel range limit switch input |
| | 7 | I_5 | Digital input | Travel range limit switch input |
| | 8 | I_6/O_1 | Digital input/output | Not assigned |
| | 9 | I_a_1+ | Analog differential input | Not assigned |
| | 10 | I_a_1- | | |

| Spring terminal (connector) | Unit | min. | max. |
|---|---|---|---|
| **Connection cable** | mm² | 0.2 | 1.5 |
| Cross section flexible | AWG | 24 | 16 |
| with ferrule without plastic sleeve | mm² | 0.25 | 1.5 |
| | AWG | 24 | 16 |
| with ferrule with plastic sleeve | mm² | 0.14 | 0.75 |
| | AWG | 26 | 18 |
| Cross section rigid | mm² | 0.2 | 1.5 |
| | AWG | 24 | 16 |
| Stripped length | mm | 10 | |

Connectors included in scope of delivery.

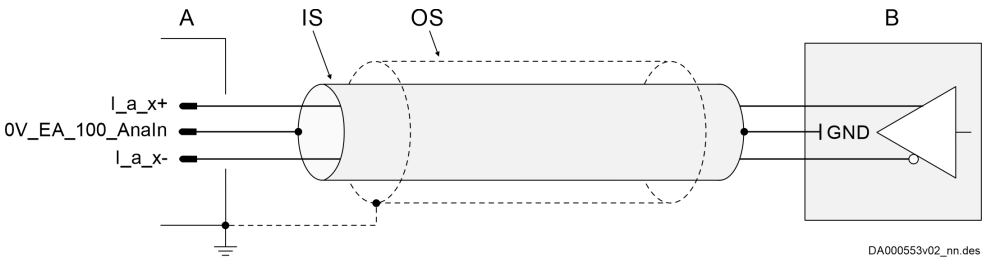


Fig. 53: Shield connection for analog inputs

A Analog input of the drive controller; **only connect the inner shield of the connection cable to the drive controller if GND has not been connected to ground in the external device.**
B External device
IS Inner shield of the connection cable
OS Overall shield of the connection cable

### XG41, safety technology Safe Torque Off

Assigned devices:

- ctrlX DRIVE single-axis (XCS1, XCS2, XMS1, XMS2)
- ctrlX DRIVE double-axis (XCD1, XMD1)
- ctrlX DRIVEplus single-axis (XCS1, XCS2, XMS1, XMS2)
- ctrlX DRIVEplus double-axis (XCD1, XCD2, XMD1, XMD2)

| View | Connection | Signal name | Function |
|---|---|---|---|
| 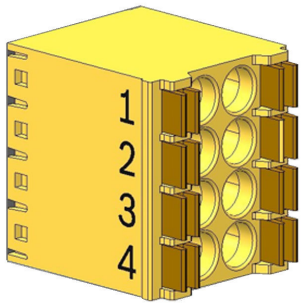  | 1 | STO_DynOut_CH1 | Channel 1 dynamization output |
| | 2 | - | n. c. |
| | 3 | STO_CH1 | Input for selection of channel 1 |
| | 4 | STO_CH1 | Input for selection of channel 1 |
| | 5 | STO_DynOut_CH2 | Channel 2 dynamization output |
| | 6 | - | n. c. |
| | 7 | STO_CH2 | Input for selection of channel 2 |
| | 8 | STO_CH2 | Input for selection of channel 2 |

| Spring terminal (connector) | Unit | min. | max. |
|---|---|---|---|
| **Connection cable** | mm² | 0.2 | 1.5 |
| Flexible | AWG | 24 | 16 |
| with ferrule without plastic sleeve | mm² | 0.25 | 1.5 |
| | AWG | 24 | 16 |
| with ferrule with plastic sleeve | mm² | 0.25 | 0.75 |
| | AWG | 24 | 18 |
| Rigid | mm² | 0.2 | 1.5 |
| | AWG | 24 | 16 |
| Stripped length | mm | 10 | |

Connections XG41.3 and XG41.4 or XG41.7 and XG41.8 are **not** electrically connected in the connector.

When the connector is removed from the device, the STO function is selected for the following devices.

Connectors included in scope of delivery.

Assigned devices:

- ctrlX DRIVE double-axis (XCD2, XMD2)

| View | Connection | Signal name | Function |
|---|---|---|---|
| 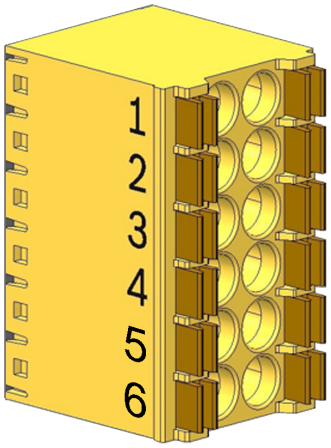  | 1 | STO_DynOut_CH1 | Channel 1 dynamization output |
| | 2 | - | n. c. |
| | 3 | STO_Ax1_CH1 | Input for selection of axis 1, channel 1 |
| | 4 | STO_Ax1_CH1 | Input for selection of axis 1, channel 1 |
| | 5 | STO_Ax2_CH1 | Input for selection of axis 2, channel 1 |
| | 6 | STO_Ax2_CH1 | Input for selection of axis 2, channel 1 |
| | 7 | STO_DynOut_CH2 | Channel 2 dynamization output |
| | 8 | - | n. c. |
| | 9 | STO_Ax1_CH2 | Input for selection of axis 1, channel 2 |
| | 10 | STO_Ax1_CH2 | Input for selection of axis 1, channel 2 |
| | 11 | STO_Ax2_CH2 | Input for selection of axis 2, channel 2 |
| | 12 | STO_Ax2_CH2 | Input for selection of axis 2, channel 2 |

| Spring terminal (connector) | Unit | min. | max. |
|---|---|---|---|
| **Connection cable** | $mm^2$ | 0.2 | 1.5 |
| Flexible | AWG | 24 | 16 |
| with ferrule without plastic sleeve | $mm^2$ | 0.25 | 1.5 |
| | AWG | 24 | 16 |
| with ferrule with plastic sleeve | $mm^2$ | 0.25 | 0.75 |
| | AWG | 24 | 18 |
| Rigid | $mm^2$ | 0.2 | 1.5 |
| | AWG | 24 | 16 |
| Stripped length | mm | 10 | |

Connections XG41.3 and XG41.4, as well as XG41.5 and XG41.6 or XG41.9 and XG41.10, as well as XG41.11 and XG41.12 are **not** electrically connected in the connector.

When the connector is removed from the device, the STO function is selected for the following devices.

Connectors included in scope of delivery.

### XZ03, hybrid connection (motor, motor temperature monitoring and motor holding brake)

**⚠ WARNING**

**Dangerous movements! Danger to persons from falling or dropping axes!**

The standard equipment motor holding brake or an external holding brake controlled by the drive controller is not sufficient to guarantee personal safety!

Personal safety must be achieved using higher-ranking, fail-safe measures:

- Block off danger zones with safety fences or safety guards.
- Additionally secure vertical axes against falling or dropping after switching off the motor power by, for example,
  - mechanically securing the vertical axes
  - external braking/arrester/clamping mechanism
  - ensuring sufficient counterweight for the vertical axes

**⚠ WARNING**

**Lethal electric shock from live parts with more than 50 V!**

The input of the motor temperature evaluation is **not** galvanically isolated from the housing. Excess voltage at the input (e.g., by the motor winding voltage flashing over) can get to the housing. Make sure that the temperature sensor of the connected motor is **double**-insulated from the motor winding.

**⚠ WARNING**

**Lethal electric shock due to live parts with more than 50 V!**

Only operate the device

- with connected connectors (even if no lines are connected to the connectors) and
- with connected equipment grounding conductor!

***NOTICE***

**Risk of damage to the device!**

Provide strain relief for the terminals of the device in the control cabinet.

***NOTICE***

**Risk of damage to device from excess voltage at motor temperature evaluation input!**

Only the allowed control voltage for the device is allowed at the motor temperature evaluation input.

Excess voltage at the input may damage the device.

Connectors **not** included in scope of delivery.

#### Function

The connection point contains the connections for

- motor power supply
- monitoring the motor temperature
- controlling the motor holding brake

Table 90: motor power supply

| View | Identification | Function | |
|---|---|---|---|
| 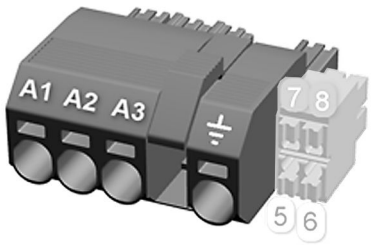 | A1 | For power connection U1 at motor | |
| | A2 | For power connection V1 at motor | |
| | A3 | For power connection W1 at motor | |
| | ⏚ | For equipment grounding connection at motor | |
| | | | |
| **Spring terminal (connector)** | **Unit** | **min.** | **max.** |
| **Connection cable** | mm² | 0.5 | 6 |
| Flexible | AWG | 20 | 10 |
| with wire end ferrule with/without plastics material sleeve | mm² | 0.5 | 6 |
| | AWG | 20 | 10 |
| Rigid | mm² | 0.5 | 10 |
| | AWG | 20 | 8 |
| Stripped length | mm | 12 | |
| Occurring current load and minimum required connection cross section | A | See technical data of device used ($I_{out}$) | |
| Occurring voltage load | V | See technical data of device used ($U_{out}$) | |
| Short circuit protection | | A1, A2, A3 against each other and each of them against ground | |

Table 91: Shield connection

| Motor cable shield connection |
|---|
| 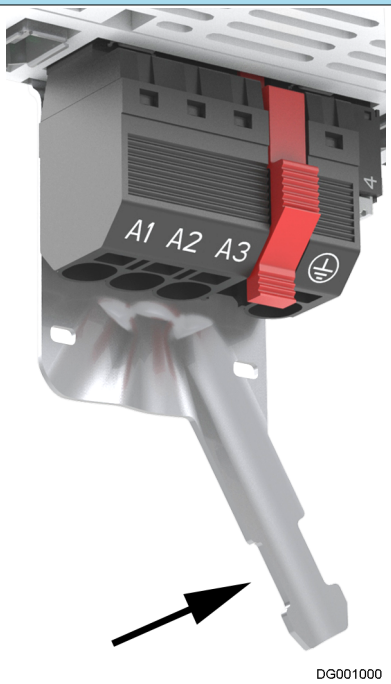 |

Table 92: Motor temperature monitoring, motor holding brake

| View | Connection | Signal name | Function |
|---|---|---|---|
| 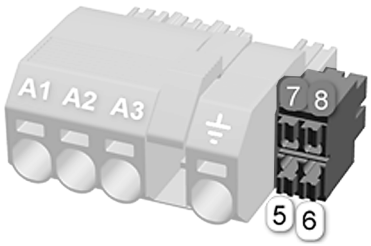 | 5 | MotTemp+ | Motor temperature evaluation input |
| | 6 | MotTemp- | |
| | 7 | +24VBr | Output to control the motor holding brake |
| | 8 | 0VBr | |
| | | | |
| **Spring terminal (connector)** | **Unit** | **min.** | **max.** |
| **Connection cable** | mm² | 0.14 | 1.5 |
| Flexible | AWG | 26 | 16 |
| with wire end ferrule with/without plastics material sleeve | mm² | 0.25 | 1.5 |
| | AWG | 24 | 16 |
| Rigid | mm² | 0.14 | 1.5 |
| | AWG | 26 | 16 |
| Stripped length | mm | 8 | |
| Current carrying capacity of brake outputs | A | - | 1 |
| Time constant of load | ms | - | 50 |
| Number of switching actions at maximum time constant of load | | Wear-free electronic contact | |
| Switching frequency | Hz | - | 0.5 |
| Short circuit protection | | XZ03.7 to XZ03.8 (output to control the motor holding brake) | |

### Motor holding brake: Installation instructions

Make sure the **power supply** is sufficient for the motor holding brake at the motor. Take into account that voltage drops on the supply line. Use connection lines with the largest possible cross section of single strands.

Use an **external contact element in accordance with the required safety category** if you wish to supply motor holding brakes with higher currents than the current load allowed at the connection point. Make sure to comply with the required minimum current consumption of 100 mA when using an external contact element. Otherwise, the brake current monitoring function will signal an error.

## 10.7.6 Optional connection points

### XG21, XG22, multi-encoder

Table 93: Function, properties

| View | Identi-fica-tion | Function | |
|---|---|---|---|
| 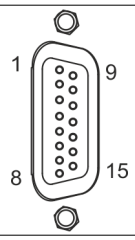 | XG21<br>XG22 | Multi-encoder connection | |
| | | | |
| **D-Sub, 15-pin, female** | **Unit** | **min.** | **max.** |
| **Connection cable**<br>Stranded wire | $mm^2$ | 0.25 | 0.5 |
| Encoder evaluation type | | EC | |

**Supported encoder systems**

Encoder systems with a supply voltage of **5 and 12 volt**:

- Motors MS2N; encoder types AS/AM, BS/BM
- Sin-cos encoder 1Vpp; HIPERFACE®
- Sin-cos encoder 1Vpp; with reference track
- Resolvers without encoder data memory
- EnDat 2.2
- SSI

Table 94: Pin assignment

| Connec-tion | Signal | Function |
|---|---|---|
| 1 | GND_shld | Signal shields connection (inner shields) |
| 2 | A+ | Track A analog positive |
| 3 | A- | Track A analog negative |
| 4 | GND_Encoder | Reference potential for power supplies |
| 5 | B+ | Track B analog positive |
| 6 | B- | Track B analog negative |
| 7 | EncData+ | Data transfer positive |
| | A+ | Track A positive |
| 8 | EncData- | Data transfer negative |
| | A- | Track A negative |
| 9 | R+ | Reference track, positive |
| 10 | R- | Reference track, negative |
| 11 | +12V | Encoder supply 12 V |
| 12 | +5V | Encoder supply 5 V |
| 13 | EncCLK+ | Clock positive |
| | B+ | Track B positive |
| 14 | EncCLK- | Clock negative |
| | B- | Track B negative |
| 15 | Sense- | Refeed of reference potential (Sense line) |
| | VCC_Resolver | Resolver supply |
| Connector housing | | Overall shield |

## SafeMotion M5

### XG42, XG43, Safe Motion safety technology (communication)

| View | Identification | Function |
|---|---|---|
| XG42:<br> 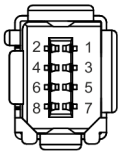 <br><br>XG43:<br> 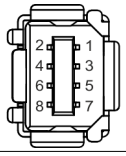 <br> | XG42<br>XG43 | Connection points for safety bus **ctrlX SAFETYlink**:<br>XG42: input<br>XG43: output |
| | | |
| **Connection cable** | • Maximum length of **one** cable between two connection points: **15 m**<br>• Number of safety zone nodes:<br>– maximum: 16<br>– minimum: 1<br>• Ready-made cables available for order:<br>– **RKB0061**<br>Short cables to connect adjacent devices in the control cabinet.<br>Available lengths: 0.25 m; 0.35 m; 0.55 m<br>Minimum bending radius in the case of permanent installation: 4xD (= 4x6.3 mm = 25.2 mm)<br>Minimum bending radius in the case of flexible routing: 8xD (= 8x6.3 mm = 50.4 mm)<br>Order code for a cable with a length of 0.55 m: RKB0061/00,55<br>– **RKB0062**<br>Long cables to connect remote communication nodes outside the control cabinet.<br>Available lengths: 1 m, 2 m, 3 m, ... 15 m, 20 m, 30 m, 50 m, 75 m, 100 m<br>Minimum bending radius in the case of permanent installation: 4xD (= 4x6.3 mm = 25.2 mm)<br>Minimum bending radius in the case of flexible routing: 8xD (= 8x6.3 mm = 50.4 mm)<br>Order designation for a cable with a length of 5 m: RKB0062/005,0 | |

### XG44, SafeMotion M5 safety technology

Table 95: Function, pin assignment

| View | Connection | Signal name | Function |
|---|---|---|---|
| 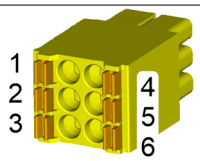 | 1 | SI_Out_Ch2 | Safe output channel 2 |
| | 2 | - | - |
| | 3 | SI_Out_Ch1 | Safe output channel 1 |
| | 4 | SI_In_Ch2 | Safe input channel 2 |
| | 5 | - | - |
| | 6 | SI_In_Ch1 | Safe input channel 1 |

| Spring terminal (connector) | Unit | min. | max. |
|---|---|---|---|
| **Connection cable** | mm² | 0.2 | 1.5 |
| Flexible | AWG | 24 | 16 |
| with wire end ferrule without plastics material sleeve | mm² | 0.25 | 1.5 |
| | AWG | 24 | 16 |
| with wire end ferrule with plastics material sleeve | mm² | 0.25 | 0.75 |
| | AWG | 24 | 18 |
| Rigid | mm² | 0.2 | 1.5 |
| | AWG | 24 | 16 |
| Stripped length | mm | 10 | |
| Polarity reversal protection for power supply | Available | | |
| Overvoltage protection | Available<br>In the case of an error, the control panel shows the corresponding error message: F3365 | | |

**Reference point of the inputs** is the 0 V supply at connector XD10.
The **24V supply at connector XD10** supplies the outputs.

Connectors included in scope of delivery.

### XG37, digital inputs, digital outputs

Inputs, outputs:

- 4 × digital input
- 4 × digital output
- 4 × digital input/output

Table 96: Function, pin assignment

| Signal name[1)] | Connec-tion | View | Connec-tion | Signal name[1)] |
|---|---|---|---|---|
| IO_1 | 1 | 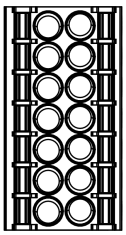 | 8 | IO_3 |
| IO_2 | 2 | | 9 | IO_4 |
| I_5 | 3 | | 10 | O_5 |
| I_6 | 4 | | 11 | O_6 |
| I_7 | 5 | | 12 | O_7 |
| I_8 | 6 | | 13 | O_8 |
| 24V_EA | 7 | | 14 | 0V_EA |
| 1) **IO**: Input/output<br>**I**: Input<br>**O**: Output<br>**24V_EA / 0V_EA**: 24 V power supply | | | | |

Table 97: Properties

| Spring terminal (connector) | Unit | min. | max. |
|---|---|---|---|
| **Connection cable** | $mm^2$ | 0.2 | 1.5 |
| Flexible | AWG | 24 | 16 |
| with ferrule without plastic sleeve | $mm^2$ | 0.25 | 1.5 |
| | AWG | 24 | 16 |
| with ferrule with plastic sleeve | $mm^2$ | 0.14 | 0.75 |
| | AWG | 26 | 18 |
| Rigid | $mm^2$ | 0.2 | 1.5 |
| | AWG | 24 | 16 |
| Stripped length | mm | 10 | |

Connectors included in scope of delivery.

### XG38, analog inputs, analog outputs

Inputs, outputs:

- 3 × analog input
- 2 × analog output

Table 98: Function, pin assignment

| Signal name[1)] | Connection | View | Connection | Signal name[1)] |
|---|---|---|---|---|
| I_a_1+ | 1 | 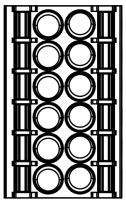 | 7 | I_a_1- |
| I_a_2+ | 2 | | 8 | I_a_2- |
| I_a_3+ | 3 | | 9 | I_a_3- |
| 0V_EA_100_AnaOut | 4 | | 10 | 0V_EA_100_AnaIn |
| O_a_1 | 5 | | 11 | O_a_2 |
| 0V_EA_Ana | 6 | | 12 | 0V_EA_Ana |
| 1) **I_a_x+/I_a_x-**: Analog differential input<br>**O_a_x**: Analog output<br>**0V_EA_Ana**: Reference O_a_x<br>**0V_EA_100_Ana**: Inner cable shield | | | | |

Table 99: Properties

| Spring terminal (connector) | Unit | min. | max. |
|---|---|---|---|
| **Connection cable** | mm² | 0.2 | 1.5 |
| Flexible | AWG | 24 | 16 |
| with ferrule without plastic sleeve | mm² | 0.25 | 1.5 |
| | AWG | 24 | 16 |
| with ferrule with plastic sleeve | mm² | 0.14 | 0.75 |
| | AWG | 26 | 18 |
| Rigid | mm² | 0.2 | 1.5 |
| | AWG | 24 | 16 |
| Stripped length | mm | 10 | |

Connectors included in scope of delivery.

### Shield connection for analog inputs

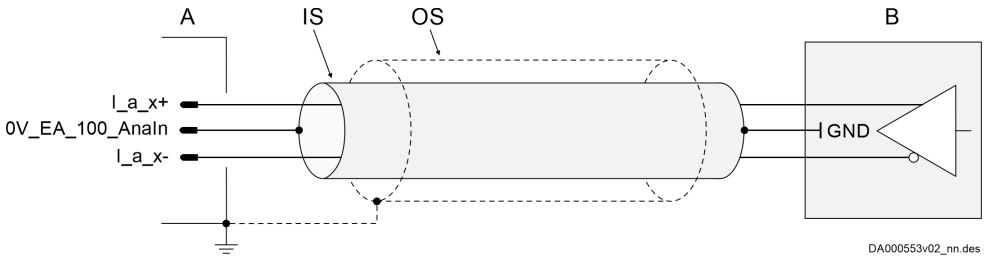


Fig. 54: Shield connection for analog inputs

A Analog input of the drive controller; **only connect the inner shield of the connection cable to the drive controller if GND has not been connected to ground in the external device.**
B External device
IS Inner shield of the connection cable
OS Overall shield of the connection cable

### Shield connection for analog outputs

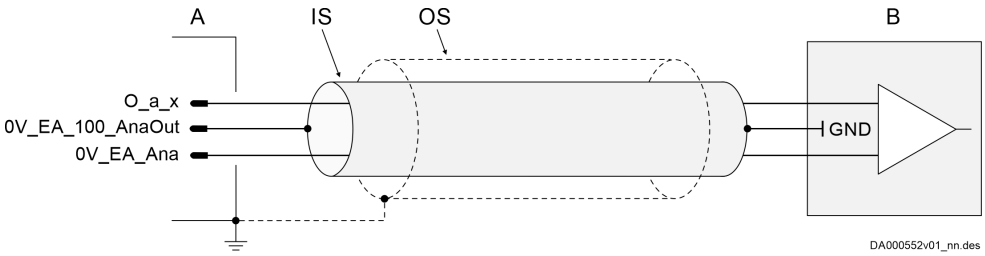


Fig. 55: Shield connection for analog outputs

A Analog output of drive controller

B External device; **only connect the inner shield of the connection cable to the external device if GND has not been connected to ground in the external device.**

IS Inner shield of the connection cable

OS Overall shield of the connection cable

### ctrlX DRIVEplus with ctrlX CORE

Configurable ctrlX DRIVEplus drives can be equipped with an internal ctrlX CORE control.

#### ctrlX CORE connection points

Table 100: Function, pin assignment, properties

| View | Connection | Function |
|---|---|---|
| 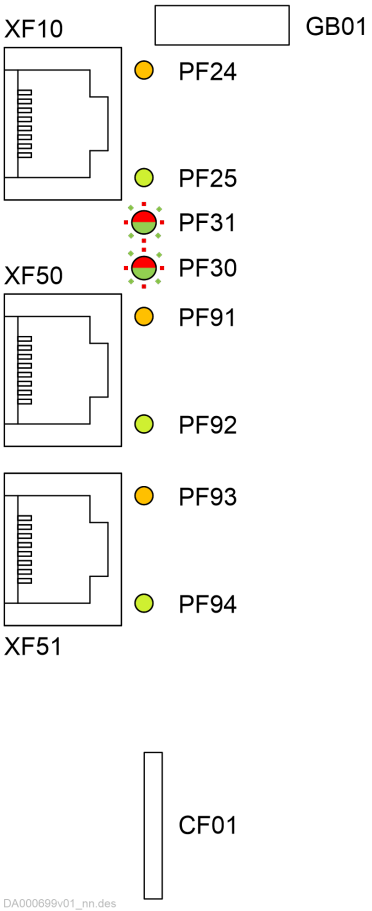 | GB01 | Battery compartment for buffer battery to buffer the system time; RTC (Real Time Clock) |
| | XF10 | Ethernet Engineering Port |
| | PF24 | Activity LED (yellow) |
| | PF25 | Link LED (green) |
| | PF31 | Status LED; Ethernet axis 2 (bicolor) |
| | PF30 | Status LED; Ethernet axis 1 (bicolor) |
| | XF50 | Ethernet-based field bus port 1 |
| | PF91 | Activity LED (yellow) |
| | PF92 | Link LED (green) |
| | XF51 | Ethernet-based field bus port 2 |
| | PF93 | Activity LED (yellow) |
| | PF94 | Link LED (green) |
| | CF01 | microSD memory card slot |

### XF10, XF50, XF51

#### Description

The connection point complies with IEEE 802.3 standard.

#### P1, P2, P3

P1 means "Port 1" and P2 means "Port 2" etc. Thus, the error counter of the firmware can be directly assigned to a port.

#### Connection XF10

Fast Ethernet interface for network connection

- Ethernet Engineering

#### Connection XF50

Fast Ethernet interface for Ethernet-based field buses (master)

- EtherCAT master output

#### Connection XF51

Fast Ethernet interface for Ethernet-based field buses

- EtherCAT master output (option)
- Ethernet Engineering (option)

#### Function, pin assignment, properties

| View | Connection | Signal name | Function |
|---|---|---|---|
| 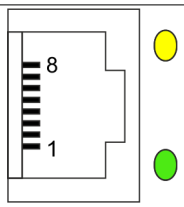 | 8 | n. c. | - |
| | 7 | n. c. | - |
| | 6 | RD- | Receive, Differential Input - |
| | 5 | n. c. | - |
| | 4 | n. c. | - |
| | 3 | RD+ | Receive, Differential Input + |
| | 2 | TD- | Transmit, Differential Output - |
| | 1 | TD+ | Transmit, Differential Output + |
| | Housing | | Shield connection |
| **Properties** | | | |
| Standard | • Ethernet<br>• Type: RJ-45, 8-pin, shielded | | |

| | |
|---|---|
| Compatibility | 100Base-TX according to IEEE 802.3u |
| Recommended cable type | • According to **CAT5e**; shield type ITP (Industrial Twisted Pair)<br>• Ready-made cables available for order:<br>– **RKB0021**<br>Long cables (100 m at most) to connect the drive system to the higher-level control unit or remote communication nodes.<br>Minimum bending radius:<br>48.75 mm with flexible routing<br>32.50 mm with permanent installation<br>Order code for a cable with a length of 30 m: RKB0021/030,0<br>– **RKB0013**<br>Short cables to connect adjacent devices in the control cabinet.<br>Lenghts:<br>0.19 m; 0.25 m; 0.35 m; 0.55 m; 1 m; 1.25 m; 2 m; 3 m; 5 m; 7 m<br>Order code for a cable with a length of 0.55 m: RKB0013/00,55<br>Minimum bending radius: 30.75 mm |

**PF30, PF31**

Table 101: LEDs

| View | Connection | Function |
|---|---|---|
| 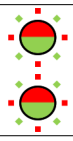 | PF30 | Status LED for Ethernet communication of axis 1 |
| | PF31 | Status LED for Ethernet communication of axis 2 (for double-axis only) |

**Diagnostic LED**

➦ Chapter 12.6.1 PF01 LED (Device State) on page 255

**GB01**

Battery holder for buffer battery.

Buffer battery: CR1025 3V lithium (e.g., Renata CR1025, 30 mAh)

Buffer time: > 3 years (with a new battery of Renata CR1025, 30 mAh type)

**CF01**

microSD slot (push-push SD card holder) for storing user data, such as log files, program data, etc.

## License information

This product contains software components that are licensed by the copyright holder under the GNU General Public License (GPL), GNU Lesser General Public License (LGPL) or any other open source software license that requires the source code to be made available.

The source code of these software components it not delivered together with this product. You can obtain the source code for these software components on a physical medium (CD or DVD) by submitting a written request to our open source office address below or by sending an e-mail to ➦ open.source@boschrexroth.de, stating the product and date of purchase.

Bosch Rexroth AG

Open Source Office

Zum Eisengießer 1

97816 Lohr am Main

Germany

We reserve the right to charge fees (up to a maximum of 20,00 €) to cover the costs for providing the source code.

You may submit your request (i) within three (3) years from the date you purchased the product containing the binary file of the requested component or (ii) in the case of code under the GPL v3 for as long as Bosch Rexroth provides spare parts or customer service for this product.

# 11 Commissioning

## 11.1 IT security

Operating systems and machines requires the implementation of a comprehensive concept for state-of-the-art IT security. Bosch Rexroth products are part of this comprehensive concept. The properties of the Bosch Rexroth products have to be considered for a comprehensive IT Security concept. For the required properties, refer to the IT Security Guideline (➡R911342562).

## 11.2 Commissioning steps

**General:**

See firmware documentation, e.g. "ctrlX DRIVE Runtime, AXS-V-03 Functions" [Application Manual; R911410072 (German), R911410073 (English)]

**Safety technology:**

- **SafeMotion** [Application Manual; R911404904 (German), R911404905 (English)]
- **Safe Torque Off** [Application Manual; R911383773 (German), R911383774 (English)]

# 12 Description of the devices

## 12.1 Positions of the plates

Table 102: Positions of the plates

| | | |
|---|---|---|
| 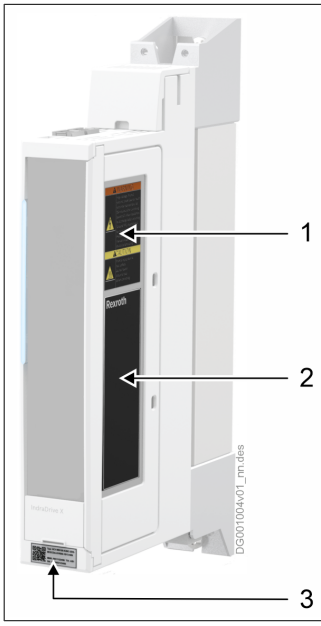 | 1 | Warning labels |
| | 2 | Type plate |
| | 3 | Additional plate |

## 12.2 Type plate

Table 103: Type plate

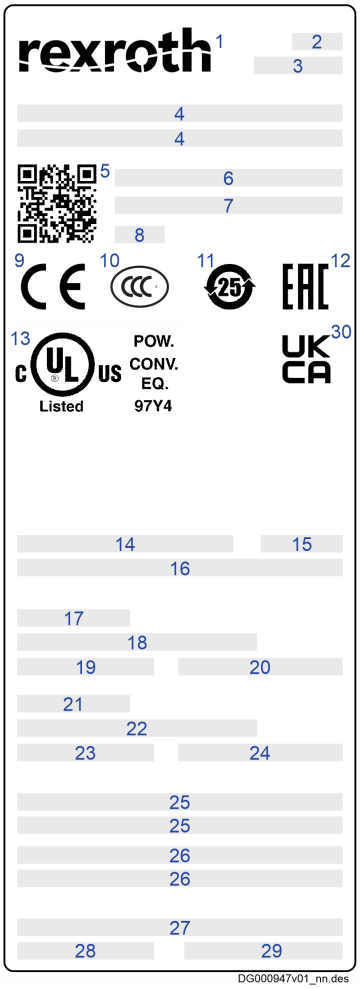


| | | | | |
|---|---|---|---|---|
| 1 | Word mark/logo | | 20 | Rated frequency<br>Input frequency |
| 2 | Factory | | 21 | Output data of power supply |
| 3 | Production week; 18W23, for example, refers to year 2018, week 23 | | 22 | Output voltage |
| 4 | Type designation | | 23 | Output current |
| 5 | QR code | | 24 | Output frequency |
| 6 | Material number | | 25 | UL text |
| 7 | Serial number | | 26 | UL text |
| 8 | Hardware index | | 27 | Company address |
| 9 | CE conformity mark | | 28 | Country of manufacture |
| 10 | CCC label | | 29 | Service hotline |
| 11 | China RoHS 2 | | 30 | UKCA marking |
| 12 | EAC conformity mark | | | |
| 13 | UL label | | | |
| 14 | Ambient temperature during operation | | | |
| 15 | Degree of protection provided by enclosure | | | |
| 16 | SCCR | | | |
| 17 | Supply input data | | | |
| 18 | Rated voltage<br>Input voltage | | | |
| 19 | Rated current<br>Input current | | | |

## 12.3 Additional plate

Table 104: Additional plate

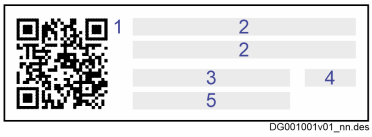


| | |
|---|---|
| 1 | QR code |
| 2 | Type designation |
| 3 | Material number |
| 4 | Hardware index |
| 5 | Serial number |

## 12.4 Warning labels

### 12.4.1 Warning labels at the device

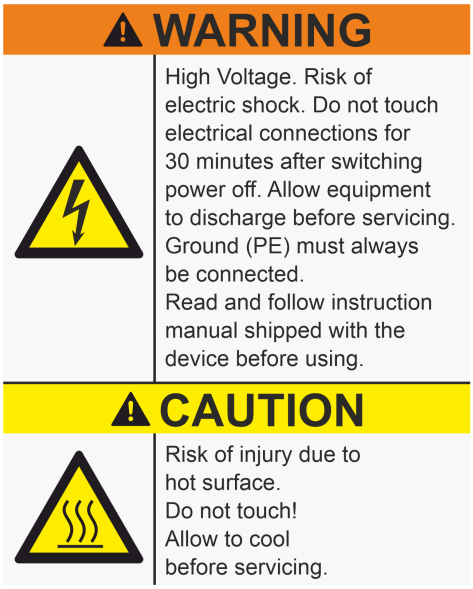


### 12.4.2 Foreign-language warning labels

If you need the warning labels in a different language, you can order the required sheets with adhesive labels (material numbers: R911337015, R911337014).

Each sheet contains a warning in 27 languages (AR, BG, CS, DA, DE, EL, EN, ES, ET, FI, FR, HU, IT, JA, KO, LT, LV, NL, PL, PT (BR), RO, RU, SK, SL, SV, TR, ZH).

| Warning "Electrical voltage" R911337015 | Warning "Hot surface" R911337014 |
|---|---|
| 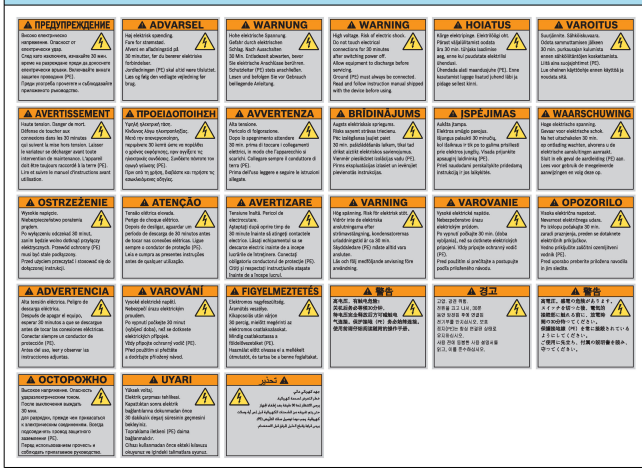 | 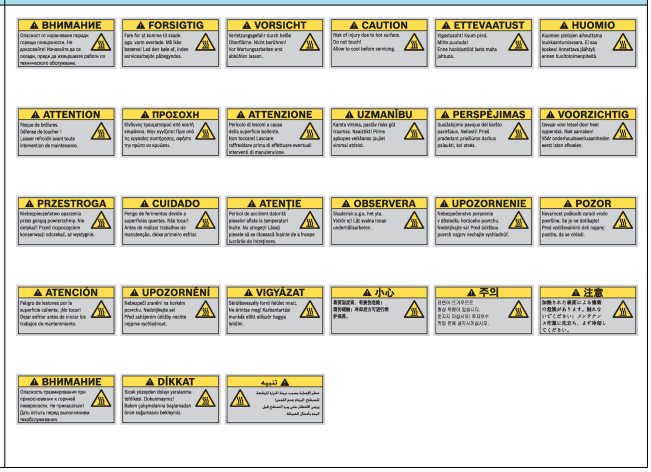 |

## 12.5 Warning labels (bilingual)

Table 105: Adhesive label in the documentation

| | |
|---|---|
| 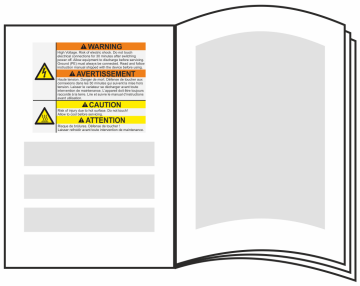 | The documentation that comes with the component contains an adhesive label with bilingual warnings. |

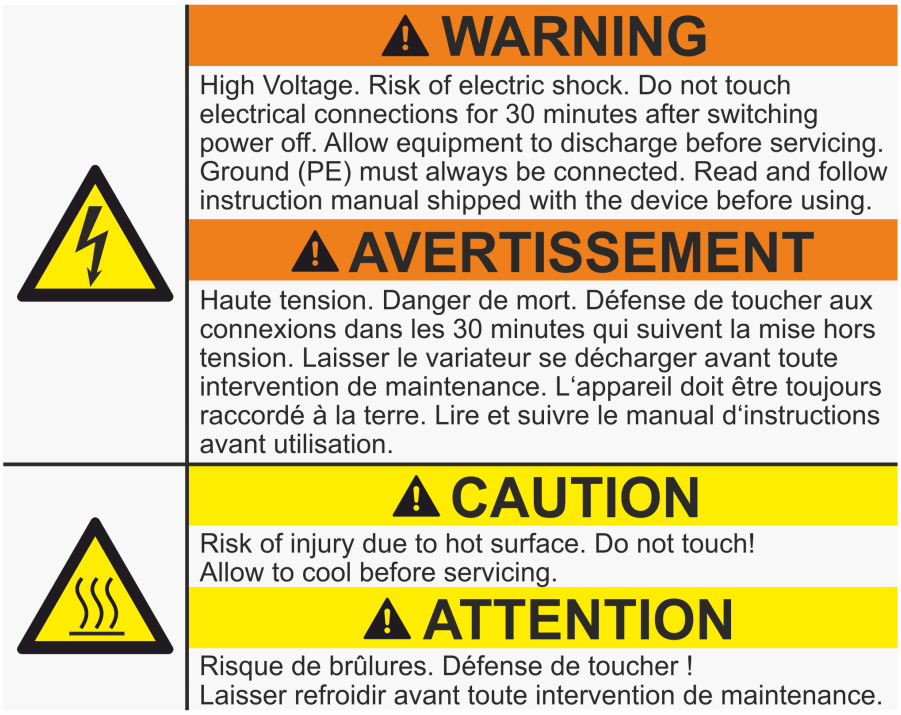

**WARNING**

High Voltage. Risk of electric shock. Do not touch electrical connections for 30 minutes after switching power off. Allow equipment to discharge before servicing. Ground (PE) must always be connected. Read and follow instruction manual shipped with the device before using.

**AVERTISSEMENT**

Haute tension. Danger de mort. Défense de toucher aux connexions dans les 30 minutes qui suivent la mise hors tension. Laisser le variateur se décharger avant toute intervention de maintenance. L'appareil doit être toujours raccordé à la terre. Lire et suivre le manual d'instructions avant utilisation.

**CAUTION**

Risk of injury due to hot surface. Do not touch!
Allow to cool before servicing.

**ATTENTION**

Risque de brûlures. Défense de toucher !
Laisser refroidir avant toute intervention de maintenance.

Do **not** stick this adhesive label with warnings directly on the component!

Place these warning labels clearly visibly in the immediate vicinity of the component, if the warning labels existing at the component are hidden by neighboring components.

## 12.6 Diagnostic display

### 12.6.1 PF01 LED (Device State)

PF01 LED

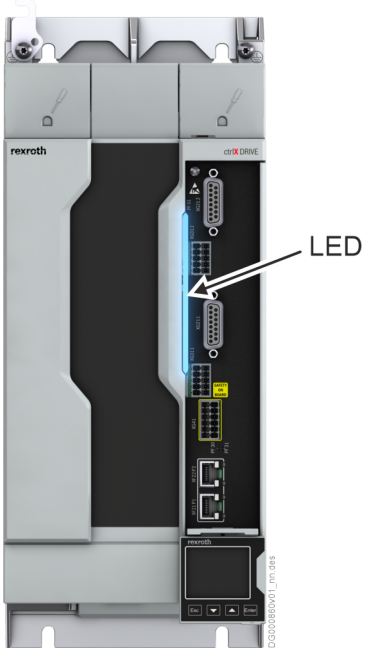


By means of different colors and flashing patterns, the LED shows the device state and the state of the optional internal control.

Description of colors and flashing patterns:

See documentation on ctrlX DRIVE firmware:

- Diagnostic Messages of Runtime AXS-V-02VRS (R911383776)
- Diagnostic Messages of Runtime AXS-V-03VRS (R911409808).
- Diagnostic Messages of Runtime AXS-V-04VRS (R911421277).

## 12.6.2 Sercos/EtherCAT/PROFINET IO

### Display elements

Table 106: Display elements

| LED | Significance |
|---|---|
| 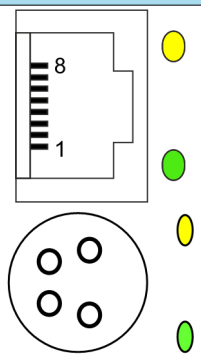 | Port LED, 1 × yellow, 1 × green |
| | Diagnostic LED, multicolor |

The LED display depends on the field bus system.

### Port LED

#### EtherCAT

EtherCAT only has one active LED per port.

Table 107: Port LED

| LED: Color / flashing pattern | Significance |
|---|---|
| <br>off | No connection |
| <br>Permanently lit green | Connection to network available, but no telegram exchange (EtherCat bus inactive) |
| <br>Flashing green | Connection to the network available with telegram exchange (EtherCat bus active) |

#### Sercos

Table 108: Port LED

| LED: Color / flashing pattern | Significance |
|---|---|
| <br>off | No connection<br>No data transfer |
| <br>Permanently lit yellow | Data transfer is active |
| <br>Permanently lit green | Connection to network available |

### PROFINET IO

Table 109: Port LED

| LED: Color / flashing pattern | Significance |
|---|---|
| off | No connection<br>No data transfer |
| Permanently lit yellow | Data transfer is active |
| Permanently lit green | Connection to network available |

## Diagnostic LED

### EtherCAT

Table 110: Diagnostic LED

| LED: Color / flashing pattern [1] | Significance | Description |
|---|---|---|
| -- <br> off | Status <br> INIT | • Cyclic process data and acyclic data channel are not transmitted <br> • no error |
| GN -- <br> Flashing green | Status <br> PRE-OPERATIONAL | Acyclic data channel is transmitted |
| GN -- -- -- -- -- <br> Green, single flashing | Status <br> SAFE-OPERATIONAL | Acyclic data channel is transmitted |
| GN <br> Permanently lit green | Status <br> OPERATIONAL | Cyclic process data and acyclic data channel are transmitted |
| RD -- <br> Flashing red | Configuration error | General EtherCAT configuration error |
| RD -- -- -- -- -- <br> Red, single flashing | Synchronization error | • The drive controller has not been synchronized to the EtherCAT master <br> • Communication error of the drive controller |
| RD -- RD -- -- -- -- -- <br> Red, double flashing | Timeout - watchdog | • Timeout during monitoring of the cyclic process data <br> • Watchdog of EtherCAT master |
| 1) Flashing pattern: One square corresponds to a duration of 200 ms; the arrow marks the end of a cycle <br> GN = LED permanently lit green <br> RD = LED permanently lit red <br> -- = LED is off | | |

### Sercos

Table 111: Diagnostic LED

| LED: Color / flashing pattern [1] | Description | Prio [2] |
|---|---|---|
| -- <br> off | NRT mode (no Sercos communication) [3] | 6 |
| OG <br> Permanently lit orange | CP0 (communication phase 0 active) | 6 |
| GN OG OG OG OG OG OG OG OG OG OG OG <br> Flashing orange/green | CP1 (communication phase 1 active) | 6 |
| GN OG GN OG OG OG OG OG OG OG OG OG <br> Flashing orange/green | CP2 (communication phase 2 active) | 6 |
| GN OG GN OG GN OG OG OG OG OG OG OG <br> Flashing orange/green | CP3 (communication phase 3 active) | 6 |
| GN <br> Permanently lit green | CP4 (communication phase 4 active) | 6 |
| OG GN OG GN OG GN OG GN OG GN OG GN <br> Flashing orange/green | HP0 (hot-plug phase 0 active) | 6 |
| OG GN GN GN GN GN GN GN GN GN GN GN <br> Flashing orange/green | HP1 (hot-plug phase 1 active) | 6 |
| OG GN OG GN GN GN GN GN GN GN GN GN <br> Flashing orange/green | HP2 (hot-plug phase 2 active) | 6 |
| GN -- GN -- GN -- GN -- GN -- GN -- <br> Flashing green | Transition from Fast forward to Loopback | 5 |
| RD OG RD OG RD OG RD OG RD OG RD OG <br> Flashing red/orange | Application error <br> (sub-device/device error [C1D]) | 4 |
| RD GN RD GN RD GN RD GN RD GN RD GN <br> Flashing red/green | MST warning [4] <br> (S-0-1045, Sercos: Device Status [S-Dev], bit15) | 3 |
| RD <br> Permanently lit red | Communication error <br> (sub-device/device error [C1D]) | 2 |
| OG -- OG -- OG -- OG -- OG -- OG -- <br> Flashing orange | Identification <br> (S-0-1044, Sercos: Device Control [C-Dev], bit15) | 1 |
| RD -- RD -- RD -- RD -- RD -- RD -- <br> Flashing red | Internal watchdog | 0 |

1) Flashing pattern: One square corresponds to a duration of 250 ms; the arrow marks the end of a cycle; abbreviations on the squares: GN = LED permanently lit green, OG = LED permanently lit orange, RD = LED permanently lit red, -- = LED is off

2) Display priority; the state of the highest priority is displayed

3) NRT = Non Real Time

4) MST = Master Synchronization Telegram

### PROFINET IO

Table 112: Diagnostic LED

| LED: Color / flashing pattern [1] | Description |
|---|---|
| -- off | Invalid IP address |
| GN -- Flashing green | No cyclic connection |
| GN Permanently lit green | Connection error-free |
| RD -- Flashing red | Connection interrupted (e.g., watchdog) |
| RD Permanently lit red | IP address already exists (Duplicate IP address check) |
| GN RD Flashing red-green | Device running up and self test |

1) Flashing pattern: One square corresponds to a duration of 200 ms; the arrow marks the end of a cycle

GN = LED permanently lit green

RD = LED permanently lit red

-- = LED is off

# 13 Error causes and troubleshooting

See firmware documentation, e.g. "ctrlX DRIVE, Diagnostic Messages" [Reference Book; R911409762 (German), R911409763 (English)].

# 14 Maintenance

The product is maintenance-free.

# 15 Ordering information

## 15.1 Type code (example XCS)

Table 113: XCS type code

| | | | | | | | | | | | | | | | | | | | | | | | | | | | | | | | | | | | | | | | | | | |
|---|---|---|---|---|---|---|---|---|---|---|---|---|---|---|---|---|---|---|---|---|---|---|---|---|---|---|---|---|---|---|---|---|---|---|---|---|---|---|---|---|---|---|
| | | | | | | | | | | 1 | | | | | | | | | 2 | | | | | | | | | 3 | | | | | | | | | 4 | |
| **Short type designation** | 1 | 2 | 3 | 4 | 5 | 6 | 7 | 8 | 9 | 0 | 1 | 2 | 3 | 4 | 5 | 6 | 7 | 8 | 9 | 0 | 1 | 2 | 3 | 4 | 5 | 6 | 7 | 8 | 9 | 0 | 1 | 2 | 3 | 4 | 5 | 6 | 7 | 8 | 9 | 0 |
| **Example:** | X | C | S | 2 | - | W | 0 | 1 | 0 | 0 | A | B | N | - | 0 | 1 | N | E | T | T | 0 | E | C | N | N | - | S | 0 | 3 | R | S | N | 1 | N | N | N | N | 0 | N | N |
| | | ① | | | | ② | | ③ | | | ④ | ⑤ | ⑥ | | | ⑦ | ⑧ | ⑨ | | ⑩ | | ⑪ | | ⑫ | | | ⑬ | ⑭ | | ⑮ | | ⑯ | ⑰ | | ⑱ | | | ⑲ | ⑳ | | ㉑ | |

| | |
|---|---|
| ① | **Product:**<br>1: **X** = ctrlX DRIVE<br>2: **C** = Feeding converter<br>3: **S** = Single-axis<br>4: **2** = Generation 2; **1** = Generation 1 |
| ② | **Cooling type:**<br>W = Air, internal<br>C = Coldplate |
| ③ | **Maximum current:**<br>0100 = 100 A (example)<br>Maximum currents: 10, 23, 54, 70, 90, 100, 120, 150, 180, 210, 250, 280, 330, 375 |
| ④ | **Degree of protection, input voltage:**<br>A = IP20, 3 × AC 200 ... 500 V +10% -15% |
| ⑤ | **Other power section options:**<br>B = Braking transistor (XCS ≥ W0100)<br>R = Integrated braking transistor/braking resistor (XCS ≤ W0070) |
| ⑥ | **Connector set:**<br>N = Without motor connector set |
| ⑦ | **Control section:**<br>01 = ctrlX DRIVE<br>02 = ctrlX DRIVE$^{plus}$ |
| ⑧ | **Panel:**<br>N = Without panel<br>A = With panel |
| ⑨ | **Communication:**<br>ET = Multi-Ethernet with RJ45<br>X3 = ctrlX CORE<br>DL = DRIVElink |
| ⑩ | **Hardware option 1 - Safety:**<br>T0 = Safe Torque Off (STO)<br>M5 = SafeMotion (M5) |
| ⑪ | **Hardware option 2:**<br>EC = Multi-encoder interface<br>NN = Not equipped |

| Short type designation | 1 | 2 | 3 | 4 | 5 | 6 | 7 | 8 | 9 | 10 | 1 | 2 | 3 | 4 | 5 | 6 | 7 | 8 | 9 | 20 | 1 | 2 | 3 | 4 | 5 | 6 | 7 | 8 | 9 | 30 | 1 | 2 | 3 | 4 | 5 | 6 | 7 | 8 | 9 | 40 |
|---|---|---|---|---|---|---|---|---|---|---|---|---|---|---|---|---|---|---|---|---|---|---|---|---|---|---|---|---|---|---|---|---|---|---|---|---|---|---|---|---|
| Example: | X | C | S | 2 | - | W | 0 | 1 | 0 | 0 | A | B | N | - | 0 | 1 | N | E | T | T | 0 | E | C | N | N | - | S | 0 | 3 | R | S | N | 1 | N | N | N | N | 0 | N | N |
| | | ① | | | | ② | | ③ | | | ④ | ⑤ | ⑥ | | | ⑦ | ⑧ | ⑨ | | ⑩ | | ⑪ | | ⑫ | | | ⑬ | ⑭ | | ⑮ | | ⑯ | ⑰ | | ⑱ | | | ⑲ | ⑳ | | ㉑ |

| | |
|---|---|
| ⑫ | **Hardware option 3:**<br>EC = Multi-encoder interface<br>ET = Multi-Ethernet<br>DA = Digital/analog I/O extension<br>NN = Not equipped |
| ⑬ | **Runtime type:**<br>S = Standard |
| ⑭ | **Runtime version:**<br>02 = Version 02 (XCS1)<br>03 = Version 03 (XCS2)<br>04 = Version 04 (XCS2) |
| ⑮ | **Runtime release:**<br>RS = Current release |
| ⑯ | **Export licenses required:**<br>N = No (maximum output frequency < 599 Hz)<br>E = Restricted export (maximum output frequency > 599 Hz) |
| ⑰ | **Protocol - communication:**<br>0 = Defined via ctrlX CORE apps (XCS2)<br>1 = Sercos III<br>2 = EtherCAT (SoE)<br>3 = EtherCAT (CoE)<br>4 = PROFINET IO |
| ⑱ | **Technology Function:**<br>NNN = None<br>TF1 = Uploading Technology Apps (XCS2)<br>TE1 = Uploading/programming Technology Apps (XCS2)<br>TX1 = Uploading/programming Technology Apps incl. LIBs (Bosch Rexroth libraries) (XCS2) |
| ⑲ | **Scope of functions, Runtime:**<br>N = DRIVE Runtime<br>P = DRIVE Runtime Productivity |
| ⑳ | **Scope of functions, SafeMotion:**<br>0 = Hardware option 1 ≠ SafeMotion<br>3 = SafeMotion Speed<br>5 = SafeMotion Position |
| ㉑ | **Other design:**<br>NN = None |

## 15.2 Accessories and spare parts

For ordering information on accessories and spare parts, please see ➦ Chapter 5 Spare parts, accessories and wear parts on page 43.

# 16 Environmental protection and disposal

## 16.1 Environmental protection

### Production processes

The products are manufactured using production processes that are energy efficient and raw material-optimized. These processes facilitate recycling of waste products. In regular intervals, we strive to replace polluted raw material, auxiliary material and process material with environmentally sustainable alternatives.

### No release of hazardous substances

Our products do not contains any hazardous material which could be released during intended use. There are usually no negative effects on the environment.

### Basic components

Our products contains the following components:

| Electronic devices | Motors |
|---|---|
| · Steel | · Steel / stainless steel |
| · Aluminum | · Aluminum |
| · Copper | · Copper |
| · Plastics | · Brass |
| · Electronic components | · Magnetic materials |
| | · Electronic components |

## 16.2 Disposal

### Return

Products by Bosch Rexroth can be returned to us for disposal free of charge. However, this requires that the products are free from oil, grease or other dirt.

Furthermore, no inappropriate foreign material or components must be included in the return consignment.

Send the products to the following address, carriage free:

*Bosch Rexroth AG*

*Electric Drives and Controls*

*Bürgermeister-Dr.-Nebel-Straße 2*

*97816 Lohr am Main, Germany*

### Packaging

Packaging materials consist of cardboard, plastics, wood and polystyrene. The materials can be easily recycled or disposed of.

Due to ecological reasons, try to avoid return consignments.

### Batteries and accumulators

Batteries and accumulators can be identified with this symbol.

The crossed-out waste bin symbol refers to collecting batteries separately.

End users in the EU are legally bound to return used batteries and accumulators. Outside the scope of the EU Directive 2006/66/EC, the applicable regulations have to be complied with.

Batteries and accumulators may contain hazardous substances which can harm the environment or human health when stored or disposed of improperly.

The batteries or accumulators contained in products by Bosch Rexroth must be returned to the country-specific collection systems for proper disposal.

### Recycling

Most of the products can be recycled due to their high content of metal. In order to recycle the metal in the best possible way, the products must be disassembled into individual assemblies.

Metals contained in electric and electronic assemblies can also be recycled by means of special separation processes.

Plastic parts of the products may contain flame retardants. These plastic parts are labeled according to EN ISO 1043 and have to be recycled or disposed of separately according to the relevant prevailing statutory provisions.

# 17 Service and support

Our worldwide service network provides an optimized and efficient support. Our experts provide you with advice and assistance. You can contact us **24/7**.

### Service Germany

Our technology-oriented Competence Center in Lohr, Germany, is responsible for all your service-related queries for electric drive and controls.

Contact the **Service Hotline** and **Service Helpdesk** under:

| | |
|---|---|
| Phone: | **+49 9352 40 5060** |
| Fax: | **+49 9352 18 4941** |
| Email: | ➦ service.svc@boschrexroth.de |
| Internet: | ➦ http://www.boschrexroth.com |

Additional information on service, repair (e.g. delivery addresses) and training can be found on our internet sites.

### Service worldwide

Outside Germany, please contact your local service office first. For hotline numbers, refer to the sales office addresses on the internet.

### Preparing information

To be able to help you more quickly and efficiently, please have the following information ready:

- Detailed description of malfunction and circumstances
- Type plate specifications of the affected products, in particular type codes and serial numbers
- Your contact data (phone and fax number as well as your e-mail address)

# 18 Index


**1, 2, 3 ...**

24 V supply
- Connection point. . . . . 217

**A**

Accumulators. . . . . 267
Ambient conditions. . . . . 65
Analog input
- XG31. . . . . 232

Analog inputs
- Connection point XG38. . . . . 243

Analog outputs
- Connection point XG38. . . . . 243

**B**

Basic components. . . . . 267
Batteries. . . . . 267
Battery safety. . . . . 38
Bb relay contact
- Connection point XG02. . . . . 223

Braking resistor
- External, connection. . . . . 211

**C**

C-UL-US listing. . . . . 98
Cables
- Documentation. . . . . 29
- RKB0061. . . . . 240
- RKB0062. . . . . 240

CE label. . . . . 91
CF01
- ctrlX CORE X3. . . . . 247

Coldplate
- Properties. . . . . 139

Communication module
- EtherCAT. . . . . 220, 221
- Sercos. . . . . 220, 221

Compatibility
- With foreign materials. . . . . 68

Components
- Mounting positions. . . . . 138

Conditions
- Ambient and operating conditions. . . . . 65

Connection
- 24 V supply (XD10). . . . . 217
- Analog inputs, analog outputs (XG38). . . 243
- Bb relay contact (XG02). . . . . 223
- Braking resistor (XD04). . . . . 211
- Communication (XF21 P1, XF22 P2) 220, 221
- Connection diagram (XCD). . . . . 171
- Connection diagram (XCS). . . . . 170
- Connection diagram (XMD). . . . . 175, 176
- Connection diagram (XMQ*-WQ001). . . . 177
- Connection diagram (XMQ*-WQ002). . . . 178
- Connection diagram (XMS). . . . . 174
- Connection diagram (XVE*-W0030). . . . . 181
- Connection diagram (XVE*-W0075). . . . . 182
- Connection diagram (XVE*-W0125). . . . . 182
- Connection diagram (XVR). . . . . 179
- Control section, connection points. . . . . 126
- Control voltage (XD10). . . . . 217
- DC bus (XD02). . . . . 196
- Digital inputs, digital outputs (XG37). . . . 242
- Digital inputs, digital outputs, analog input (XG31). . . . . 232
- Electric strength of the connected lines. . 137
- Equipment grounding conductor. . . . . 183
- Hybrid connection XZ03 (motor, motor temperature monitoring and motor holding brake). . . . . 235
- Mains (XD01). . . . . 187
- Motor (XD03). . . . . 199
- Motor encoder (XG20). . . . . 230
- Motor holding brake (XG03). . . . . 224
- Motor temperature monitoring (XG03). . . 224
- Multi-encoder (XG21, XG22). . . . . 238
- Probe. . . . . 232
- Safety technology Safe Torque Off (XG41) 233
- XCD, connection points, overview. . . . . 113
- XCS, connection points, overview. . . . . 108
- XE20, Y capacitor ground connection. . . . 219
- XLI-XVR (XG20) mains connection. . . . . 229
- XMD-W0606 ... W3636, connection points, overview. . . . . 119
- XMD, connection points, overview. . . . . 119
- XMD*-*5454/-W7070, connection points, overview. . . . . 120
- XMQ*-WQ001, connection points, overview. . . . . 121
- XMQ*-WQ002, connection points, overview. . . . . 122
- XMS, connection points, overview. . . . . 114
- XVE, connection points, overview. . . . . 124
- XVR, connection points, overview. . . . . 123

Connection diagram
- XCD. . . . . 171
- XCS. . . . . 170
- XMD. . . . . 175, 176
- XMQ*-WQ001. . . . . 177
- XMQ*-WQ002. . . . . 178
- XMS. . . . . 174
- XVE*-W0030. . . . . 181
- XVE*-W0075. . . . . 182
- XVE*-W0125. . . . . 182
- XVR. . . . . 179

Connection points
- ctrlX CORE X3. . . . . 245

Contained materials
- see "Basic components". . . . . 267

Control cabinet
- Area A, free from interference. . . . . 158
- Area B, interference-susceptible. . . . . 160
- Area C, interference-susceptible. . . . . 160

Cooling. . . . . 67
Design. . . . . 67
Interference areas. . . . . 156
Control section
Connection points. . . . . 126
ctrlX DRIVE double-axis. . . . . 131
ctrlX DRIVE single-axis. . . . . 130
ctrlX DRIVE supply unit. . . . . 136
ctrlX DRIVEplus + CORE double-axis. . . . 135
ctrlX DRIVEplus + CORE single-axis. . . . . 133
ctrlX DRIVEplus + CORE supply unit. . . . . 136
ctrlX DRIVEplus double-axis. . . . . 134
ctrlX DRIVEplus single-axis. . . . . 132
Control voltage
Connection point XD10. . . . . 217
Loop-through contacts (XD10). . . . . 217
CORE
X3, connection points. . . . . 245
ctrlX CORE
X3, connection points. . . . . 245
X3, diagnostic LED. . . . . 247
ctrlX SENSEmotor
Encoder. . . . . 230

D

Danger
Incorrect use. . . . . 34
Dangerous movement
Protection. . . . . 36
Data
Ambient conditions. . . . . 65
Operating conditions. . . . . 65
XCD. . . . . 75
XCS. . . . . 71
XMD. . . . . 83
XMQ. . . . . 85
XMS. . . . . 77
XVE. . . . . 89
XVR. . . . . 87
DC bus
Connection point XD02. . . . . 196
Touch guard. . . . . 197
Declaration of conformity
Machinery Directive. . . . . 92, 101
Devices
Mounting positions. . . . . 138
Diagnostic display
PF01 LED. . . . . 255
Digital inputs
Connection point XG31. . . . . 232
Connection point XG37. . . . . 242
Probe. . . . . 232
Digital outputs
Connection point XG31. . . . . 232
Connection point XG37. . . . . 242
Display elements
EtherCAT, LEDs. . . . . 256
PROFINET, LEDs. . . . . 256
Sercos, LEDs. . . . . 256
Disposal. . . . . 267
Documentation
Cables. . . . . 29
Drive systems. . . . . 27
Firmware. . . . . 27
Motors. . . . . 29
Runtime. . . . . 27
System components. . . . . 27

E

Electric strength
Lines. . . . . 137
EMC
Measures for design and installation. . . . 153
Encoder
Connection, XG20. . . . . 230
Connection, XG21, XG22. . . . . 238
ctrlX SENSEmotor. . . . . 230
Supported encoder systems. . . . . 238
Environmental protection. . . . . 267
Equipment grounding conductor
Connection point. . . . . 183
EtherCAT
Connection. . . . . 220, 221
Display elements (LEDs). . . . . 256

F

Firmware
Documentation. . . . . 27
Foreign materials
Compatibility. . . . . 68

G

G1, G2, G3, G4, G5
Mounting positions. . . . . 138
GB01
ctrlX CORE X3. . . . . 247
Ground connection
XE20, Y capacitor ground connection. . . . 219
Ground connections. . . . . 162

H

Hazardous substances. . . . . 267
Helpdesk. . . . . 269
Hotline. . . . . 269

I

Incorrect use. . . . . 34
Input
Analog, XG31. . . . . 232
Analog, XG38. . . . . 243
Digital, XG31. . . . . 232
Digital, XG37. . . . . 242
Probe. . . . . 232

Installation
Electric strength of the connected lines. . 137
EMC measures. . . . . 153
General information. . . . . 152
Ground connections. . . . . 162
Signal lines. . . . . 163
Installation conditions. . . . . 65
Interference suppression measures
For relays, contactors, switches, chokes and inductive loads. . . . . 164
IT security. . . . . 249

L

L+, L-
DC bus. . . . . 196
LED
Communication (EtherCAT). . . . . 256
Communication (PROFINET). . . . . 256
Communication (Sercos). . . . . 256
Diagnostic LED, EtherCAT. . . . . 258
Diagnostic LED, PROFINET IO. . . . . 260
Diagnostic LED, Sercos. . . . . 259
EtherCAT. . . . . 256
PF01, diagnostic display. . . . . 255
Port LED, EtherCAT. . . . . 256
Port LED, Sercos. . . . . 256
PROFINET. . . . . 256
Sercos. . . . . 256
Listing
C-UL-US. . . . . 98

M

M5
SafeMotion. . . . . 241
Mains connection
XD01. . . . . 187
Mains filter
Motor fan. . . . . 159
Other loads. . . . . 159
Mains XLI-XVR
XD03 (XVR*-W0019, XLI1-1R-W0019). . . . 207
XD03 (XVR*-W0048, XLI1-1R-W0048). . . . 208
XD03 (XVR*-W0072, XLI*-1R-W0072). . . . 209
XD03 (XVR*-W0100, XLI*-1R-W0100). . . . 210
Motor
Connection (XD03). . . . . 199
Connection, motor holding brake (XG03). 224
Connection, motor temperature monitoring (XG03). . . . . 224
Documentation. . . . . 29
Hybrid connection XZ03 (motor, motor temperature monitoring and motor holding brake). . . . . 235
Motor encoder connection (XG20). . . . . 230
Motor holding brake. . . . . 224
Motor output (XD03). . . . . 199
Motor temperature monitoring. . . . . 224
Multi-encoder connection (XG21, XG22). 238
Motor fan
Mains filter. . . . . 159
Mounting
in the control cabinet. . . . . 137
Mounting positions
Definitions. . . . . 138
Multi-encoder
Connection, XG21, XG22. . . . . 238

O

Operating conditions. . . . . 65
Optional module
DA, analog inputs, analog outputs. . . . . 243
DA, digital inputs, digital outputs. . . . . 242
EC, multi-encoder interface. . . . . 238
M5, SafeMotion. . . . . 241
Output
Analog, XG38. . . . . 243
Digital, XG31. . . . . 232
Digital, XG37. . . . . 242

P

P1, P2
Communication. . . . . 220, 221
P1, P2, P3
Communication. . . . . 246
Packaging. . . . . 267
Panel
Operation modes. . . . . 63
Type code. . . . . 61
PELV. . . . . 36
PF01
LED. . . . . 255
PF30, PF31
ctrlX CORE X3. . . . . 247
Port LED
Displays. . . . . 256
Probe input (XG31). . . . . 232
Production processes. . . . . 267
PROFINET
Display elements (LEDs). . . . . 256
PROFINET IO
Connection. . . . . 221
Protection
Battery safety. . . . . 38
Contact with hot parts. . . . . 38
Dangerous movement. . . . . 36
Electromagnetic and magnetic fields. . . . . 37
Handling. . . . . 38
Mounting. . . . . 38
Pressurized systems. . . . . 39
Protective extra-low voltage. . . . . 36

R

Recycling. . . . . 268
Relay contact
Connection point XG02. . . . . 223
Requirements
Safe use. . . . . 33

Return. . . . . 267
RKB0013. . . . . 221
RKB0021. . . . . 221
RKB0061. . . . . 240
RKB0062. . . . . 240
Runtime
Documentation. . . . . 27

S

Safe Torque Off
XG41. . . . . 233
Safe use
Requirements. . . . . 33
SafeMotion
M5. . . . . 241
M5, connection points. . . . . 240
XG44. . . . . 241
Safety technology
M5 (SafeMotion). . . . . 241
XG41, Safe Torque Off. . . . . 233
SAFETYlink
XG42, XG43. . . . . 240
Security. . . . . 249
Sercos
Connection. . . . . 220, 221
Display elements (LEDs). . . . . 256
Service hotline. . . . . 269
Shield connection
XAS2. . . . . 43
Signal lines
Installation. . . . . 163
Standards. . . . . 91
Storing
Components. . . . . 69
Support. . . . . 269

T

Touch guard
DC bus. . . . . 197
Transporting
Components. . . . . 68
Type code
Panel. . . . . 61
XCS. . . . . 265
XDP1. . . . . 61
Type plate
ctrlX DRIVE. . . . . 31, 252

U

UKCA marking. . . . . 100
UL
Listing. . . . . 98
UL/CSA certification. . . . . 98
Use
Danger. . . . . 34
Safe use. . . . . 33

W

Warning labels
at the device. . . . . 253
Bilingual. . . . . 254

X

X3
ctrlX CORE, connection points. . . . . 245
XAS2
Shield connection. . . . . 43
XCD
Connection diagram. . . . . 171
Connection points. . . . . 113
Data. . . . . 75
XCS
Connection diagram. . . . . 170
Connection points. . . . . 108
Data. . . . . 71
Type code. . . . . 265
XD01
Mains connection. . . . . 187
XD02
DC bus connection. . . . . 196
XD03
Mains XLI-XVR (XVR*-W0019, XLI1-1R-W0019) . . . . . 207
Mains XLI-XVR (XVR*-W0048, XLI1-1R-W0048) . . . . . 208
Mains XLI-XVR (XVR*-W0072, XLI*-1R-W0072) . . . . . 209
Mains XLI-XVR (XVR*-W0100, XLI*-1R-W0100) . . . . . 210
Motor output. . . . . 199
XD04
Braking resistor. . . . . 211
XD10
Control voltage (24 V). . . . . 217
XDP1
Type code. . . . . 61
XE20
Y capacitor ground connection. . . . . 219
XF10, XF50, XF51
ctrlX CORE X3. . . . . 246
XF21 P1, XF22 P2
Communication. . . . . 220, 221
XG02
Bb relay contact, module bus. . . . . 223
XG03
Motor temperature monitoring and motor holding brake. . . . . 224
XG20
Motor encoder. . . . . 230
XLI bus. . . . . 229
XG21, XG22
Multi-encoder. . . . . 238
XG31
Digital inputs, digital outputs, analog input. . . . . 232

XG37
Digital inputs, digital outputs. . . . . 242
XG38
Analog inputs, analog outputs. . . . . 243
XG41
Safe Torque Off. . . . . 233
XG42, XG43
Optional safety technology Safe Motion (communication). . . . . 240
XG44
Optional safety technology SafeMotion. . 241
XLI bus
Connection, XG20. . . . . 229
XLI-XVR mains connection
XG20. . . . . 229
XMD
Connection diagram. . . . . 175, 176
Connection points. . . . . 119
Data. . . . . 83
XMQ
Connection points. . . . . 121, 122
Data. . . . . 85
XMQ*-WQ001
Connection diagram. . . . . 177
XMQ*-WQ002
Connection diagram. . . . . 178
XMS
Connection diagram. . . . . 174
Connection points. . . . . 114
Data. . . . . 77
XVE
Connection points. . . . . 124
Data. . . . . 89
XVE*-W0030
Connection diagram. . . . . 181
XVE*-W0075
Connection diagram. . . . . 182
XVE*-W0125
Connection diagram. . . . . 182
XVR
Connection diagram. . . . . 179
Connection points. . . . . 123
Data. . . . . 87
XZ03
Hybrid connection (motor, motor temperature monitoring and motor holding brake). . . . . 235

## Y

Y capacitor ground connection
XE20. . . . . 219

Bosch Rexroth AG
Bgm.-Dr.-Nebel-Str. 2
97816 Lohr a.Main
Germany
Tel. +49 9352 18 0
Fax +49 9352 18 8400
www.boschrexroth.com/electrics

R911392532