RE 51131
Edition: 2025-04

rexroth
A Bosch Company

Motor-pump modules

Type ABMAXX-M(2)PU-A10VSO

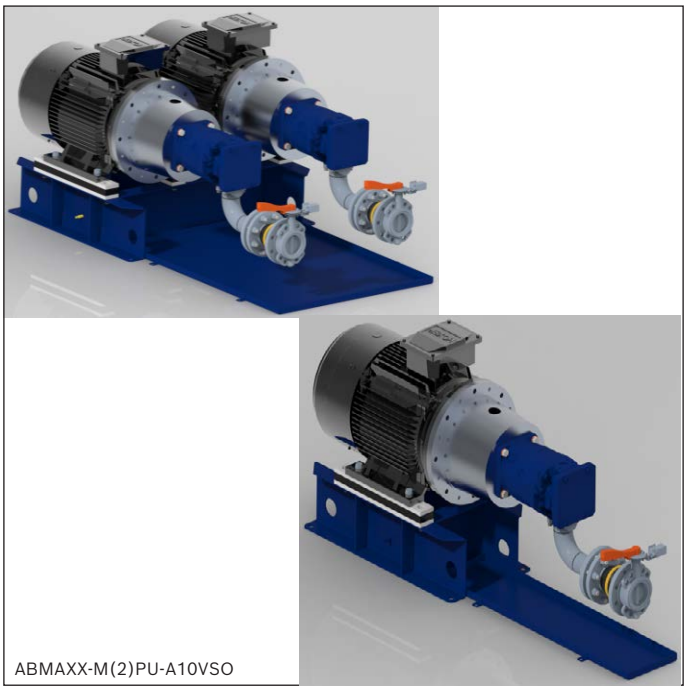
ABMAXX-M(2)PU-A10VSO

- Modular motor-pump unit
- Single and double design
- Component series 1X

Features

- Pump sizes A10VSO 100 ... 180
- Motor power 37 kW ... 132 kW
- Motor voltage 400/690 V – 50 Hz
- Single frame or double frame with integrated drip plate
- With suction bend, compensator and shut-off valve (position-monitored)

Contents

Features	1
Ordering code	2
Technical data	3
Motor-pump modules **MPU**	4
Circuit diagram	4
Dimensions	5
Line connections	6
Selection tables MPU	6
Motor-pump modules **M2PU**	7
Circuit diagram	7
Dimensions	8
Line connections	9
Selection table M2PU	9
Installation information	10
Commissioning, maintenance, and operating instructions	10
Further information	11

Ordering code

01		02	03		04	05	06	07		08		09		10
ABMAXX-M(2)PU	**–**	**N**	**1X**	**/**	**A10V**				**/**		**/**		**/**	

01	Modular motor-pump-unit	**ABMAXX MPU**
02	Standard	**N**
03	Component series 10 to 19 (10 to 19: unchanged installation and connection dimensions)	**1X**
04	Pump type A10VSO	**A10V**

Displacement

05	100 ... 180 cm^3 per rotation	**100 ... 180**

Control and adjustment device

06	Pressure controller (DR)	**D**
	Pressure/flow controller (DFR1)	**F**
	Power controller with hyperbolic characteristic curve LR2	**L**
	Pressure controller remote controllable (DRG)	**G**
	Pressure controller for parallel operation (DP)	**P**
	Probe	**X**
07	Motor power 37... 315 kW	**37 ... 315**

Country version

08	Europe	**EU**

Seal material

09	NBR	**M**
	FKM	**V**

Motor manufacturer

10	Hoyer	**HOY**
	Siemens	**SIE**

Technical data
(For applications outside these values, please consult us!)

General		
Weight (depending on configuration level) without oil	kg	490 ... 2400
Installation position		Horizontal
Ambient temperature range	°C	+10 ... +40
Place of installation		Industrial building with minor corrosion conditions
Air humidity	%	< 60
Surface coating CP3		For areas without corrosive atmosphere. Class "CP3" is produced by coating the standard series coating with priming, usually in RAL5010 (gentian blue).

Hydraulic			
Line connections			See table on page 6 (MPU) and page 9 (M2PU)
Pump type			A10VSO according to data sheet 92714
Direction of rotation of pump			R = clockwise
Hydraulic fluid [1]			See table below
Hydraulic fluid temperature range (note viscosity range)		°C	–25 ... +90
	▶ $T_{optimal}$ for HLP46 (DIN 51524)	°C	+40 ... +50
	▶ T_{max} in continuous operation	°C	< +65
Maximum admissible degree of contamination of the hydraulic fluid; cleanliness class according to ISO 4406 (c)			Class 20/18/15 [2]

Hydraulic fluid		**Classification**	**Suitable sealing materials**	**Standards**	**Data sheet**
Mineral oils		HL, HLP, HLPD, HVLP, HVLPD	NBR, FKM	DIN 51524	90220
Bio-degradable	▶ Insoluble in water	HETG	FKM	ISO 15380	90221
		HEES	FKM		
	▶ Soluble in water	HEPG	FKM	ISO 15380	
Flame-resistant	▶ Water-free	HFDU (glycol base)	FKM	ISO 12922	90222
		HFDU (ester base)	FKM		
		HFDR	FKM		
	▶ Containing water	HFC (Fuchs: Hydrotherm 46M, Renosafe 500; Petrofer: Ultra Safe 620; Houghton: Safe 620; Union: Carbide HP5046)	NBR	ISO 12922	90223

☞ **Important information on hydraulic fluids:**
▶ For further information and data on the use of other hydraulic fluids, please refer to the data sheets above or contact us.

[1] The product fulfills the substance requirements of the RoHS Directive 2011/65/EU.

[2] The cleanliness classes specified for the components must be adhered to in hydraulic systems. Effective filtration prevents faults and at the same time increases the life cycle of the components.

Electric		
Electric motor		Low-voltage three-phase current motor
Voltage ***U***	V	400/690 at 50Hz
Efficiency class		IE3 or IE4 from 75 kW
Number of pole pairs		4
Speed ***n***	rpm	1450 at 50 Hz
Protection class		IP55
Installation position		Horizontal

Motor-pump modules MPU

Circuit diagram

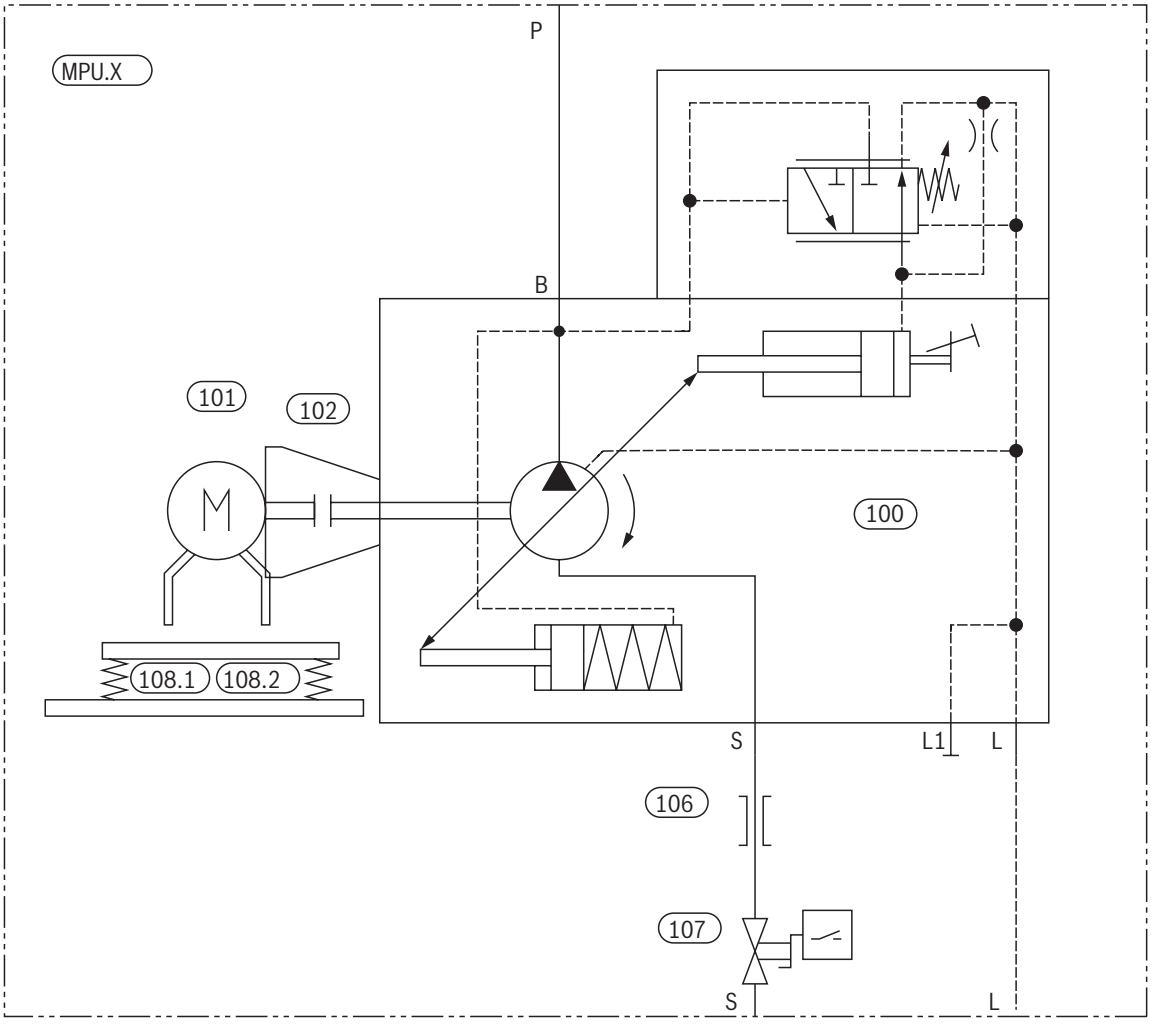

100 Pump
101 Motor
102 Assembly kit (pump carrier and coupling)
106 Compensator
107 Shut-off valve
108 Damping rail

Dimensions:
(dimensions in mm)

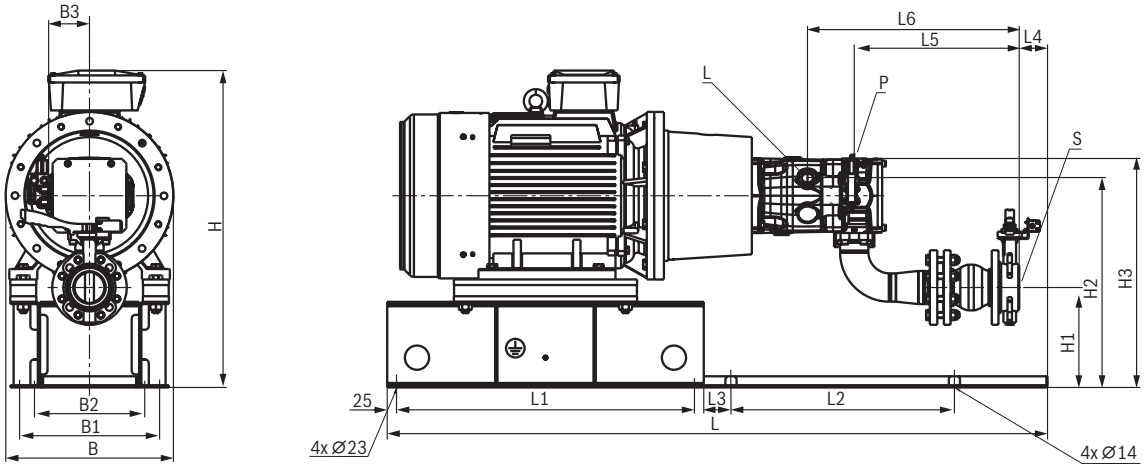

ABMAXX-MPU-N1X/	L	B	H	L1	L2	L3	L4	L5	L6	B1	B2	B3	H1	H2	H3
A10V100D037/EU/M/HOY	1773	450	851	800	600	73	76	443	568.5	376	296	105	268	564	615
A10V100D045/EU/M/HOY	1781	450	871	800	600	80.5	71	443	568.5	376	296	105	288	584	635
A10V100D055/EU/M/HOY	1881	550	934	800	700	80.5	147	443	568.5	456	310	105	313	609	660
A10V100D075/EU/M/HOY	1979	557	962	800	710	143	171	443	568.5	507	360	105	313	609	660
A10V100D090/EU/M/HOY	2004	557	962	800	710	143	145.5	443	568.5	507	360	105	313	609	660
A10V140D045/EU/M/HOY	1781	450	871	800	600	80.5	53	461	563	376	296	116	278	591	645
A10V140D055/EU/M/HOY	1882	550	934	800	700	80.5	112	461	563	456	310	116	303	616	670
A10V140D075/EU/M/HOY	1979	557	962	800	710	143	153	461	563	507	360	116	303	616	670
A10V140D090/EU/M/HOY	2004	557	962	800	710	143	127.5	461	563	507	360	116	303	616	670
A10V140D110/EU/M/HOY	2410	660	1095	1150	750	68	303	461	563	578	390	116	338	651	705
A10V180D055/EU/M/HOY	1882	550	934	800	700	80.5	102	461	573	456	310	116	303	616	670
A10V180D075/EU/M/HOY	1979	557	962	800	710	143	143	461	573	507	360	116	303	616	670
A10V180D090/EU/M/HOY	2004	557	962	800	710	143	117.5	461	573	507	360	116	303	616	670
A10V180D110/EU/M/HOY	2410	660	1095	1150	750	68	293	461	573	578	390	116	338	651	705
A10V180D132/EU/M/HOY	2495	660	1095	1150	750	68	267.5	461	573	578	390	116	338	651	705

Line connections:

Pump type	Pressure port P	Suction port S	Leakage oil connection L
A10VSO100DR	SAE J518 - 1 1/4 in [1)]	DN80 PN16	M33X2
A10VSO140DR	SAE J518 - 1 1/4 in [1)]	DN100 PN16	M33X2
A10VSO180DR	SAE J518 - 1 1/4 in [1)]	DN100 PN16	M33X2

[1)] High pressure SAE flange figure with metric mounting screws.

Selection tables MPU:

Pump A4VSO	Frequency 50 Hz/1450 rpm			Motor size	Mat. no.	Type	Weight in **kg**
	qv_{max} in l/min	p_{max} in bar	P in kW				
100DR	138	129	37	225S	R987509405	ABMAXX-MPU-N1X/A10V100D037/EU/M/HOY	493
		160	45	225M	R987509406	ABMAXX-MPU-N1X/A10V100D045/EU/M/HOY	526
		196	55	250M	R987509407	ABMAXX-MPU-N1X/A10V100D055/EU/M/HOY	623
		273	75	280S	R987509408	ABMAXX-MPU-N1X/A10V100D075/EU/M/HOY	822
		280	90	280M	R987509409	ABMAXX-MPU-N1X/A10V100D090/EU/M/HOY	872
140DR	193	119	45	225M	R987509410	ABMAXX-MPU-N1X/A10V140D045/EU/M/HOY	530
		148	55	250M	R987509411	ABMAXX-MPU-N1X/A10V140D055/EU/M/HOY	629
		204	75	280S	R987509412	ABMAXX-MPU-N1X/A10V140D075/EU/M/HOY	827
		246	90	280M	R987509413	ABMAXX-MPU-N1X/A10V140D090/EU/M/HOY	875
		280	110	315S	R987509414	ABMAXX-MPU-N1X/A10V140D110/EU/M/HOY	1190
180DR	248	120	55	250M	R987509415	ABMAXX-MPU-N1X/A10V180D055/EU/M/HOY	643
		167	75	280S	R987509416	ABMAXX-MPU-N1X/A10V180D075/EU/M/HOY	842
		203	90	280M	R987509417	ABMAXX-MPU-N1X/A10V180D090/EU/M/HOY	890
		251	110	315S	R987509418	ABMAXX-MPU-N1X/A10V180D110/EU/M/HOY	1204
		280	132	315M	R987509419	ABMAXX-MPU-N1X/A10V180D132/EU/M/HOY	1347

Motor-pump modules M2PU

Circuit diagram

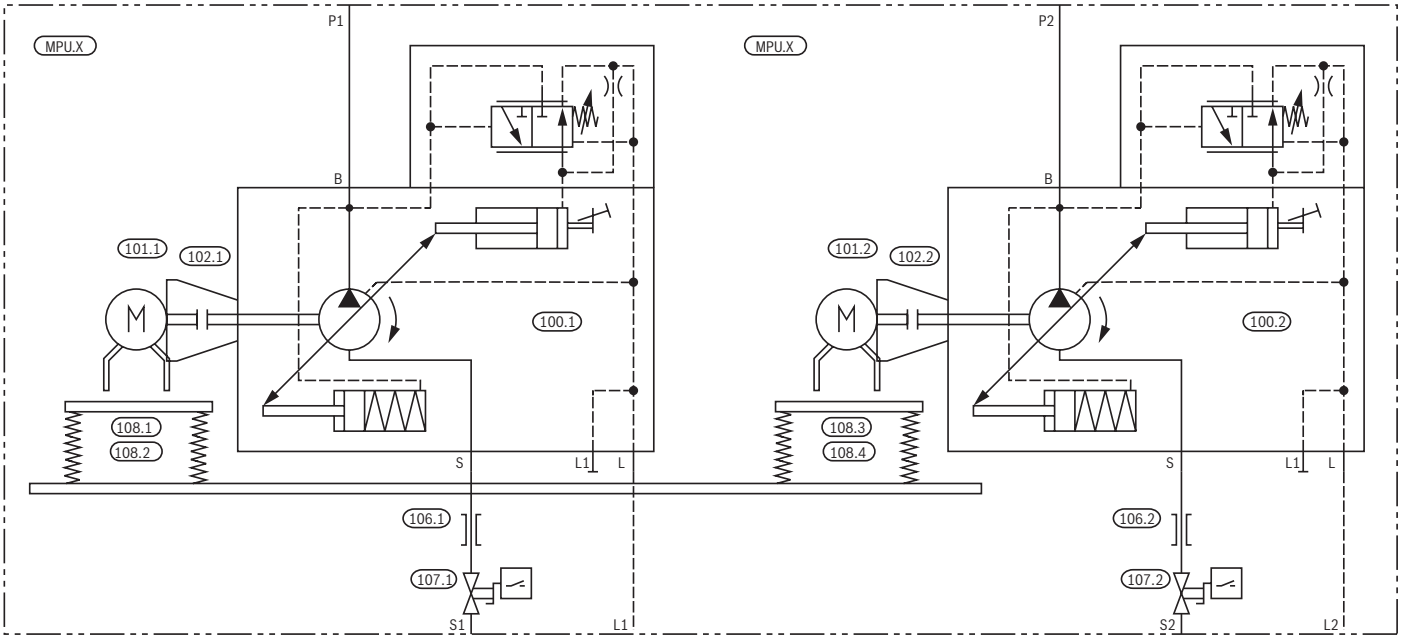

100 Pump
101 Motor
102 Assembly kit (pump carrier and coupling)
106 Compensator
107 Shut-off valve
108 Damping rail

Dimensions:
(dimensions in mm)

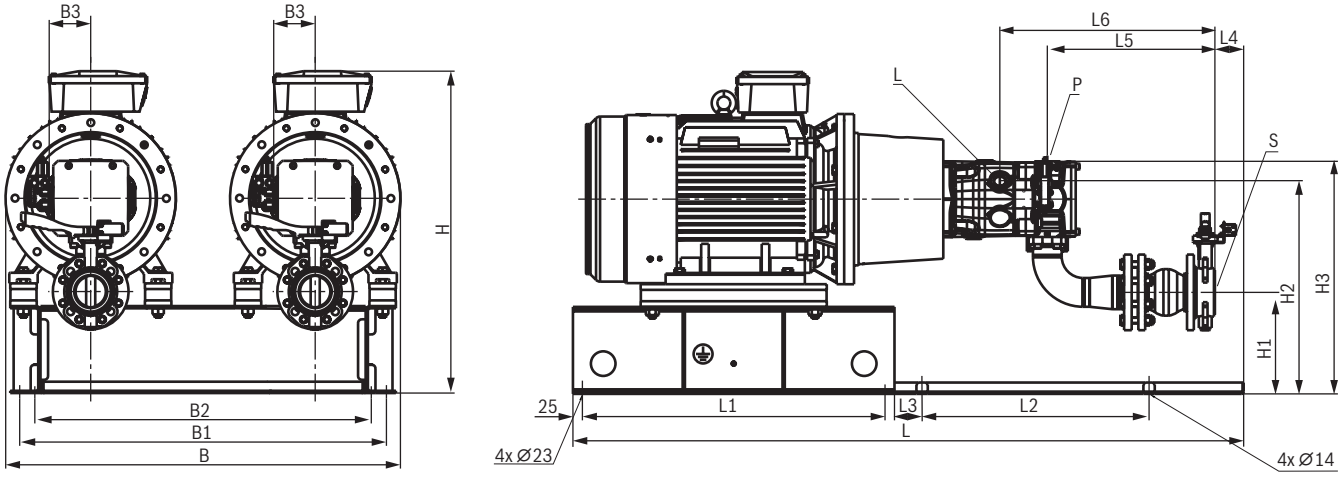

ABMAXX-M2PU-N1X/	L	B	H	L1	L2	L3	L4	L5	L6	B1	B2	B3	H1	H2	H3
A10V100D037/EU/M/HOY	1773	1021	851	800	600	73	76	443	568.5	947	860	105	268	564	615
A10V100D045/EU/M/HOY	1781	1021	871	800	600	80.5	71	443	568.5	947	860	105	288	584	635
A10V100D055/EU/M/HOY	1881	1164	934	800	700	80.5	147	443	568.5	1070	920	105	313	609	660
A10V100D075/EU/M/HOY	1979	1228	962	800	710	143	171	443	568.5	1178	1030	105	313	609	660
A10V100D090/EU/M/HOY	2004	1228	962	800	710	143	145.5	443	568.5	1178	1030	105	313	609	660
A10V140D045/EU/M/HOY	1781	1021	871	800	600	80.5	53	461	563	947	860	116	278	591	645
A10V140D055/EU/M/HOY	1882	1164	934	800	700	80.5	112	461	563	1070	920	116	303	616	670
A10V140D075/EU/M/HOY	1979	1228	962	800	710	143	153	461	563	1178	1030	116	303	616	670
A10V140D090/EU/M/HOY	2004	1228	962	800	710	143	127.5	461	563	1178	1030	116	303	616	670
A10V140D110/EU/M/HOY	2410	1410	1095	1150	750	68	303	461	563	1328	1140	116	338	651	705
A10V180D055/EU/M/HOY	1882	1164	934	800	700	80.5	102	461	573	1070	920	116	303	616	670
A10V180D075/EU/M/HOY	1979	1228	962	800	710	143	143	461	573	1178	1030	116	303	616	670
A10V180D090/EU/M/HOY	2004	1228	962	800	710	143	117.5	461	573	1178	1030	116	303	616	670
A10V180D110/EU/M/HOY	2410	1410	1095	1150	750	68	293	461	573	1328	1140	116	338	651	705
A10V180D132/EU/M/HOY	2495	1410	1095	1150	750	68	267.5	461	573	1328	1140	116	338	651	705

Line connections:

Pump type	Pressure port P	Suction port S	Leakage oil connection L
A10VSO100DR	SAE J518 - 1 1/4 in [1)]	DN80 PN16	M33X2
A10VSO140DR	SAE J518 - 1 1/4 in [1)]	DN100 PN16	M33X2
A10VSO180DR	SAE J518 - 1 1/4 in [1)]	DN100 PN16	M33X2

[1)] High pressure SAE flange figure with metric mounting screws.

Selection table M2PU:

Pump A10VSO	Frequency 50 Hz/1450 rpm			Motor size	Mat. no.	Type	Weight
	qv_{max} in l/min	p_{max} in bar	P in kW				
100DR	138	129	37	225S	R987509542	ABMAXX-M2PU-N1X/A10V100D037/EU/M/HOY	983 kg
		160	45	225M	R987509543	ABMAXX-M2PU-N1X/A10V100D045/EU/M/HOY	1048 kg
		196	55	250M	R987509544	ABMAXX-M2PU-N1X/A10V100D055/EU/M/HOY	1230 kg
		273	75	280S	R987509545	ABMAXX-M2PU-N1X/A10V100D075/EU/M/HOY	1626 kg
		280	90	280M	R987509546	ABMAXX-M2PU-N1X/A10V100D090/EU/M/HOY	1743 kg
140DR	193	119	45	225M	R987509547	ABMAXX-M2PU-N1X/A10V140D045/EU/M/HOY	1055 kg
		148	55	250M	R987509548	ABMAXX-M2PU-N1X/A10V140D055/EU/M/HOY	1251 kg
		204	75	280S	R987509549	ABMAXX-M2PU-N1X/A10V140D075/EU/M/HOY	1652 kg
		246	90	280M	R987509550	ABMAXX-M2PU-N1X/A10V140D090/EU/M/HOY	1748 kg
		280	110	315S	R987509551	ABMAXX-M2PU-N1X/A10V140D110/EU/M/HOY	2355 kg
180DR	248	120	55	250M	R987509553	ABMAXX-M2PU-N1X/A10V180D055/EU/M/HOY	1279 kg
		167	75	280S	R987509555	ABMAXX-M2PU-N1X/A10V180D075/EU/M/HOY	1681 kg
		203	90	280M	R987509556	ABMAXX-M2PU-N1X/A10V180D090/EU/M/HOY	1777 kg
		251	110	315S	R987509558	ABMAXX-M2PU-N1X/A10V180D110/EU/M/HOY	2677 kg
		280	132	315M	R987509559	ABMAXX-M2PU-N1X/A10V180D132/EU/M/HOY	2391 kg

Installation information

Fluid tank

- Adjust useful volume of the tank to the operating conditions.
- The admissible fluid temperature must not be exceeded; if necessary, use a cooler

Lines and connections

- Remove the protective plug at the pump.
- Select the clear width of the pipes according to the connections (suction speed max 0.8 m/s).
- Piping and fittings must be carefully cleaned before assembly.
- Observe the installation information of the manufacturers
- The pump pressure connection P must always be protected on the system side with an admissible pressure limitation unit.

Filter

- Use return flow and/or pressure filters

Hydraulic fluid

- Please refer to the information in data sheet 90220.
- Brand-name hydraulic oils are recommended. In order to guarantee functional safety, a minimum cleanliness class 20/18/15 according to ISO4406 is required.
- Different oil types must not be mixed as this might result in degradation and deterioration of the lubricity.
- According to the operating conditions, the oil quality must be checked by means of an oil analysis at certain intervals and the oil must be replaced, if necessary.
- In this connection, it is also necessary to clean the fluid tank.
- Return fluid must not be directly sucked in again under any circumstances. The largest distance between suction and return line possible is to be selected.
- The return flow exit must always be below the oil level.
- Ensure tight assembly of the piping.

Commissioning, maintenance, and operating instructions

In this connection, please refer to the information in the following documents:

– Data sheet 07009
– Data sheet 07009-MON
– Data sheet 92714

Legal provisions

- In Germany, the Ordinance on Industrial Safety and Health (BetrSichV) applies.
- The EU Regulation 640/2009 on the environmentally friendly design of electric motors.

Notice pursuant to the EC Machinery Directive 2006/42/EC, according to appendix II part 1, section A, manufacturer's declaration:

- The assemblies are manufactured in accordance with the harmonized standards DIN EN ISO 4413, DIN EN ISO 12100 and DIN 60204-1.
- Commissioning is prohibited until it was confirmed that the machine into which the assemblies are to be integrated complies with the regulations laid down in the EC Directives.

Further information

▶ Axial piston variable displacement pump A10VSO, series 32	Data sheet 92714
▶ Mating connectors and cable sets for valves and sensors in hydraulics	Data sheet 08006
▶ General operating instructions for hydraulic power units and hydraulic assemblies	Data sheet 07009-B
▶ General assembly instructions with information about the transport of the hydraulic power units	Data sheet 07009-MON
▶ Hydraulic fluids based on mineral oils	Data sheet 90220
▶ Information on available spare parts	www.boschrexroth.com/spc

Bosch Rexroth AG
Industrial Hydraulics
Zum Eisengießer 1
97816 Lohr am Main, Germany
Phone +49 (0) 93 52/40 30 20
my.support@boschrexroth.com
www.boschrexroth.com

© All rights reserved to Bosch Rexroth AG, also regarding any disposal, exploitation, reproduction, editing, distribution, as well as in the event of applications for industrial property rights.
The data specified above only serve to describe the product. As our products are constantly being further developed, no statements concerning a certain condition or suitability for a certain application can be derived from our information. The information given does not release the user from the obligation of own judgment and verification. It must be remembered that our products are subject to a natural process of wear and aging.

Bosch Rexroth AG
Industrial Hydraulics
Zum Eisengießer 1
97816 Lohr am Main, Germany
Phone +49 (0) 93 52 / 40 30 20
my.support@boschrexroth.com
www.boschrexroth.com

© All rights reserved to Bosch Rexroth AG, also regarding any disposal, exploitation, reproduction, editing, distribution, as well as in the event of applications for industrial property rights.
The data specified above only serve to describe the product. As our products are constantly being further developed, no statements concerning a certain condition or suitability for a certain application can be derived from our information. The information given does not release the user from the obligation of own judgment and verification. It must be remembered that our products are subject to a natural process of wear and aging.

Bosch Rexroth AG, RE 51131, edition: 2025-04